VULCRAFT®

STEEL JOIST & JOIST GIRDER SYSTEMS



V2020.3J

NUCOR®
VULCRAFT
Powerful Partnerships
Powerful Results

VULCRAFT SALES CORPORATION OFFICES

ATLANTA, GA
P. 770.307.2111

BALTIMORE, MD
P. 410.998.0800

BIRMINGHAM, AL
P. 205.982.4394

BOARDMAN, OH
P. 330.726.8833

CENTERVILLE, UT
P. 801.292.0730

COLUMBIA, SC
P. 803.358.1300

DALLAS, TX
P. 214.340.1883

DENVER, CO
P. 303.757.6323

EDISON, NJ
P. 732.738.8188

FLOWOOD, MS
P. 601.383.7807

GENEVA, NY
P. 315.828.1730

GERMANTOWN, WI
P. 262.251.5666

GRAND RAPIDS, MI
P. 616.949.2106

HINSDALE, IL
P. 630.887.1400

HOUSTON, TX
P. 281.251.8857

INDIANAPOLIS, IN
P. 317.576.5399

KERNSVILLE, NC
P. 336.497.5302

KNOXVILLE, TN
P. 865.690.6388

LEXINGTON, KY
P. 859.940.0152

LITTLE ROCK, AR
P. 501.758.6424

MEMPHIS, TN
P. 901.612.3481

MINNEAPOLIS, MN
P. 763.425.4399

NASHVILLE, TN
P. 615.871.9385

NEW HUDSON, MI
P. 248.486.6166

NORRISTOWN, PA
P. 610.539.6516

OKLAHOMA CITY, OK
P. 405.715.2844

ORANGE, CA
P. 714.957.5713

OVERLAND PARK, KS
P. 913.341.9299

PHOENIX, AZ
P. 623.385.1649

SACRAMENTO, CA
P. 916.488.8180

SALEM, NH
P. 603.894.1146

SAN ANTONIO, TX
P. 210.655.9070

SEATTLE, WA
P. 425.402.9011

SPRINGFIELD, OH
P. 937.390.2300

ST. LOUIS, MO
P. 636.266.1844

TAMPA, FL
P. 813.621.0684

Please Visit the **Contact Us** Page at www.Vulcraft.com to Find Your Closest Sales Office

NUCOR®
VULCRAFT
Powerful Partnerships
Powerful Results

THE 3RD EDITION OF:

Designing with Vulcraft Steel Joists, Joist Girders, Steel Deck

by

James M. Fisher & Julius Van De Pas

IS NOW AVAILABLE!

This trusted resource has been updated to current building codes and includes critical information on today's design challenges. Information includes:

- Connection design, from basic to complex
- Special topics from adding a new joist to vibration analysis
- Design examples to help enhance your understanding
- And much, much more.

Get your complementary copy today by:

- Contacting your local Vulcraft Sales Rep
- Download a copy at vulcraft.com/catalogs

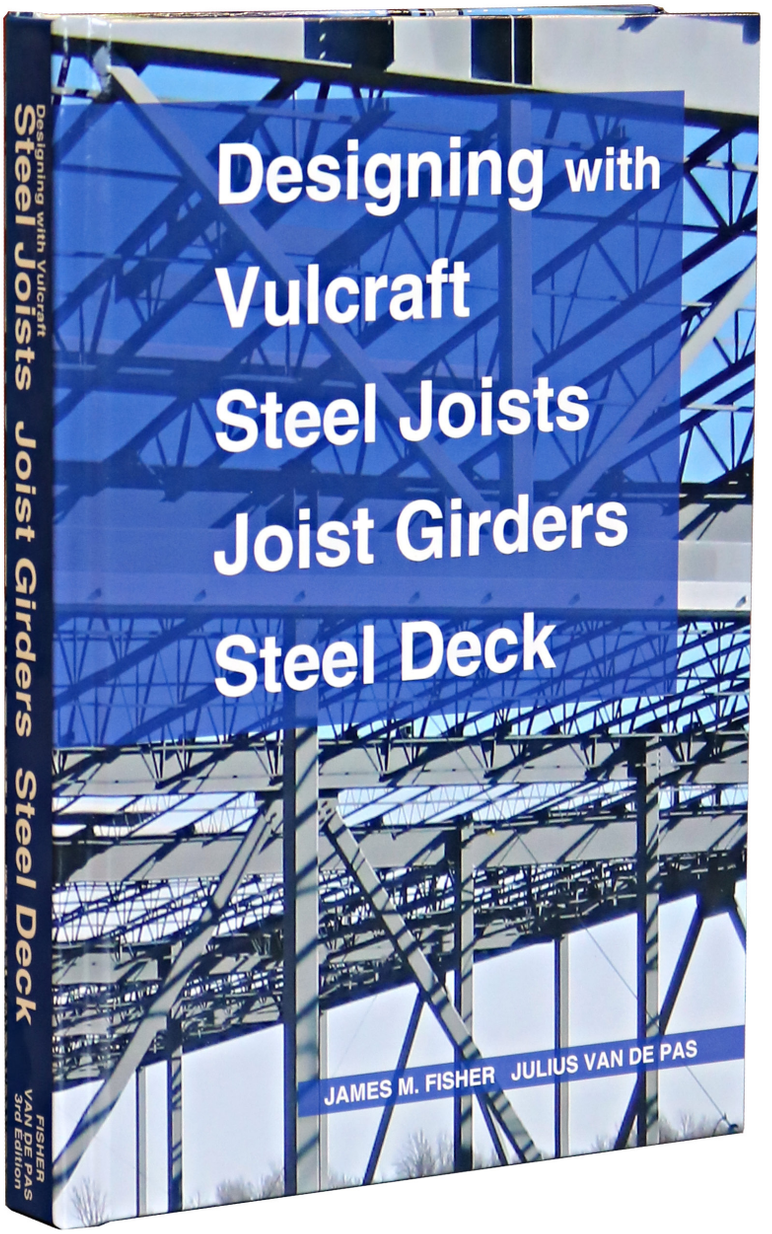

NUCOR®
VULCRAFT
Powerful Partnerships
Powerful Results

PLANT INFORMATION

Vulcraft Alabama
7205 Gault Ave. N
Fort Payne, AL 35967
256-845-2460

Vulcraft Indiana
6610 County Road 60
St. Joe, IN 46785
260-337-1800

Vulcraft Nebraska
1601 West Omaha Ave.
Norfolk, NE 68701
402-644-8500

Vulcraft of New York
621 Main Street
Chemung, NY 14825
607-529-9000

Vulcraft South Carolina
1501 West Darlington Street
Florence, SC 29501
843-662-0381

Vulcraft Texas
175 County Road 2345
Grapeland, TX 75844
936-687-4665

Vulcraft Utah
1875 West Highway 13 South
Brigham City, UT 84302
435-734-9433

Vulcraft Canada
West
1709 8th Street
Nisku, AB T9E 7S8
780-955-3390

East
1362 Osprey Dr.
Ancaster, ON L9G 4V5
289-443-2000



TABLE OF CONTENTS



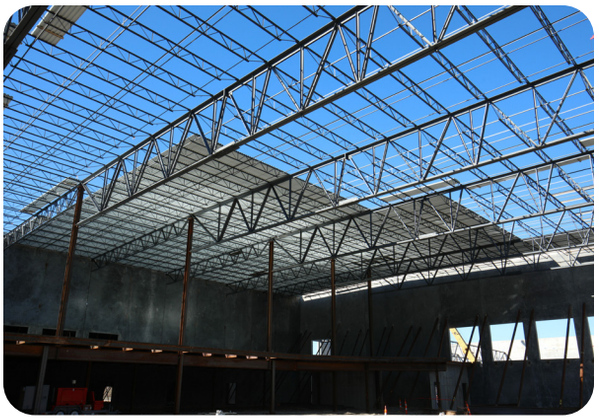



About Us.....5
Joist Selection Flow Chart.....7
Who We Are.....8
BIM.....10
LEED.....11
Joist Design Information.....12
Uplift Design.....14
End Moments.....17
Axial Loads.....20
Serviceability.....22
Floor Vibration.....23
Typical Joist Connections.....25
Special Profiles.....26
Special Construction.....27
Bridging Information.....28
Sloped Seat Depths.....34
Accessories & Details.....36
Floor Joists.....39
Economical Joist Guide.....40
Code of Standard Practice.....68
Standard Specification.....96
Load Tables LRFD - K-Series.....136
Load Tables ASD - K-Series.....145
Load Tables LRFD - KCS-Series.....154
Load Tables ASD - KCS-Series.....157
Load Tables LRFD/ASD - TCX.....160
Load Tables LRFD/ASD - Joist Substitutes.....165
Load Tables LRFD - LH-Series.....170
Load Tables ASD - LH-Series.....191
Load Tables LRFD - DLH-Series.....212
Load Tables ASD - DLH-Series.....217
Standard Weights for Joist Girders.....222
Glossary.....233
Fire Resistance - Appendix A.....240
OSHA Standards - Appendix B.....250

Cover Image: Loyola High School - Xavier Hall
Los Angeles, CA

NOTICE

VULCRAFT reserves the right to change the design or details of its products without notice. The information in this catalog is presented for general information only and is not to be used or relied upon for any application without complete review of the proposed application and without a complete review by a licensed professional architect, engineer, designer or other qualified professional.

VULCRAFT assumes no liability whatsoever for the accuracy or completeness of the information contained herein.

VULCRAFT makes no representation or warranty of any kind, either express or implied, respecting any information contained in this catalog including, but not limited to, the accuracy, completeness or suitability of such information for any particular purpose or use.

In addition, VULCRAFT expressly disclaims any liability for incidental, special, consequential or punitive damages including, but not limited to, loss of profits or loss of use arising out of this catalog or its use.

VULCRAFT'S liability, warranties and other obligations with respect to its products are set forth in the Terms and Conditions of Sale provided to Buyer in connection with the provision of such products.
As used herein, references to VULCRAFT include its parents, affiliates and subsidiaries.

Pages identified with the Steel Joist Institute (SJI) logo (as shown below) are a reproduction of the SJI's 45th EDITION, STANDARD SPECIFICATIONS, Load Tables and Weight Tables for Steel Joists and Joist Girders. This information is being used courtesy of the Steel Joist Institute and in Copyrighted Steel Joist Institute. Reprinted With Permission. All Rights Reserved.



Our Mission

GROW THE CORE
EXPAND BEYOND
LIVE OUR CULTURE

OUR CHALLENGE IS
TO BECOME THE WORLDS SAFEST STEEL COMPANY.

WE LIVE EACH DAY WITH
GRATITUDE
FOR THE FAMILIES, CUSTOMERS AND PARTNERS THAT MAKE OUR WORK POSSIBLE.



Focusing on Relationships.

Vulcraft and Verco have invested a great deal of time and resources to build companies that focus on the relationship with our customers. As a result, our companies have the highest quality of products in the industry, the expertise to complete jobs correctly, and the goal to always seek out win-win solutions. Powerful partnerships get powerful results.

A Word About Quality

In the manufacture of open web steel joists and Joist Girders, there can be no compromise on quality. Your business depends on it. Our reputation and success depends on it. As the largest manufacturer of open web steel joists and Joist Girders in North America, a lot of buildings and a lot of people depend on Vulcraft for consistently high standards of quality demonstrated through reliable performance.

In the manufacture of open web steel joists and Joist Girders, Vulcraft uses high quality steel. Welding to exact specifications is the key to making structurally sound joists and is the most critical step in the entire process. All Vulcraft welders are certified in accordance with the standards of the American Welding Society. All welds are in accordance with the welding criteria specified by the Steel Joist Institute and joists and Joist Girders are manufactured to meet the loading indicated by the specifying professional.

To further ensure the quality of every weld, every Vulcraft Quality Assurance Inspector is also certified to these same high standards. To further manage quality assurance in our manufacturing processes, Vulcraft employs an ongoing program of mechanical testing that includes full scale load tests at our facilities.

As the leading Manufacturer of open web steel joists and Joist Girders in North America, Vulcraft's reputation depends on successfully managed Quality Assurance programs. That is why Quality is important at Vulcraft. You have our word on it.



SPAN

↓

FIRE RESISTANCE (MIN. MEMBER SIZES - SJI Technical Digest #10)

↓

MAX/MIN JOIST DEPTH

↓

SPACING → **SEAT DEPTH**

↓

UNIFORM LOAD
-DL
-LL
-COLLATERAL DL

↓

UPLIFT LOADING (SJI Technical Digest #6)

↓

CONCENTRATED LOADS
-WALL SCREENS (NO OUT OF PLANE LOADS)
-RTU'S
-BRACING LOADS

↓

ZONE LOADS
-DRIFT (SNOW)
-MOVABLE PARTITIONS

↓

OTHER LOADS
-DRAG OR COLLECTOR LOADS
-PONDING (SJI Technical Digest #3)
-END MOMENTS (SJI Technical Digest #11, JG MOMENT CONNECTIONS DESIGN TOOL)
-VIBRATION (AISC DG#11, SJI Technical Digest #5, FloorVibe, Vulcraft Vibration Analysis Tool - Walking)

WHO WE ARE

At Vulcraft, we are proud to be one of the earliest operating divisions of Nucor Corporation (www.nucor.com). Nucor offers steel products that range from bar grating to the heaviest hot rolled beam sections produced in North America.

Through implementation and refinement of best practices, we continue to grow as a company. Nucor's pay-for-performance policy reflects a commitment to manufacturing the highest quality products while maintaining a safety record that is the envy of the industry.

Nucor serves the agricultural, automotive, construction, energy, furniture, machinery, metal building, railroad, recreational equipment, shipbuilding, heavy truck, and trailer industries. Which is to say, we are integral to North American industry.

Nucor and its subsidiary divisions manufacture the following:

- Bars (carbon and alloy steel)
- Sheets/Flatrolled
- Open Web Steel Joists
- Steel Decks
- Cold finished steel
- Metal building systems
- Steel Grating
- Wire and wire mesh
- Conduit
- Beams
- Plates
- Joist Girders
- Fabricated concrete reinforcing steel
- Steel fasteners
- Piling
- Expanded metal
- Tube

Vulcraft (www.vulcraft.com) is the largest producer of open web steel joists and Joist Girders in North America. Vulcraft was founded in 1946 in Florence, South Carolina as an industrial steel fabrication facility and in 1954 began exclusively manufacturing long span and short span open web steel joists. It became a member of the Steel Joist Institute in May 1959 and was purchased by Nuclear Corporation of America in September 1962. Since then Vulcraft continued to grow with facilities in Norfolk, Nebraska (1964), Fort Payne, Alabama (1967), Grapeland, Texas (1967), St. Joe, Indiana (1972), Brigham City, Utah (1981), Chemung, New York (2000), Verco Deck Phoenix, Arizona, Fontana, California, Antioch, California (2006), Nucor Detailing Center, Nebraska (2009), Vulcraft Canada, Ontario (2016) and Vulcraft Canada, Alberta (2017).

In addition to open web steel joists and Joist Girders Vulcraft manufactures the following products:

- Roof Deck
- Non-Composite Floor Deck
- Composite Floor Deck
- Dovetail Deck
- Cellular Deck
- Special Profile Open Web Steel Joists
  - -Single Pitch
  - -Double Pitch
  - -Multiple Pitch
  - -Bowstring
  - -Scissors
  - -Arch Chord
- CJ-Series Composite Joists
- Ecospan Composite Floor System
- Grating Fabrication
- Steel Fabrication


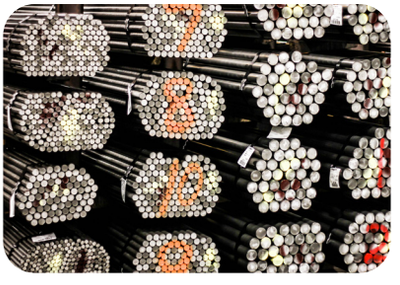
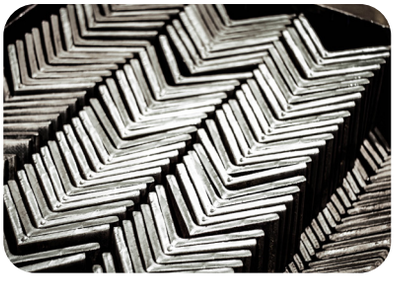




BIM

Vulcraft is pairing their proven track record of quality and service with the future of 3D modeling to give fabricators, erectors, general contractors, engineers and architects an edge over competitors in the market. Providing customers with a detailed model that can display a replica of their building, BIM leads to confidence and peace of mind for the life cycle of the project.

Vulcraft's distinct advantages include multiple platforms, including Revit®, Tekla, and SDS/2, designed web layouts, bridging, specialty joist profiles and seat profiles with slots.

NuBIM® for Revit
Our NuBIM for Revit add-in allows users to specify and model all parallel chord joists and Joist Girders available from Vulcraft as well as a number of common special profile joists, Ecospan and composite joists. Users have the ability to apply a variety of common loading conditions to all joists, as well as create load tables and diagrams. All Vulcraft and Verco deck profiles can be added to standard Revit floor and roof components through the add-in also. When your project is complete, a file can be exported containing all information related to our products, which can be sent to your Vulcraft sales rep to aid in the quoting and detailing process.

NuBIM® for Tekla
With the NuBIM for Tekla Plug-In you can now build and manage projects more effectively within Tekla Structures. Vulcraft's Joist Plug-In for Tekla Structures enables you to specify Vulcraft joists during the creation of the building model. The joist parameters from the model can then be exported directly into Vulcraft's Detailing and Design Programs.

Designed Joist
When viewing the BIM provided by Vulcraft engineers, replicas of the steel joists are laid into each aspect of the project. Simple lines, and inexplicable renderings have been replaced with steel joists crafted by Vulcraft to represent the "as-built" product that will be delivered to job sites. Joists manufactured by Vulcraft can be supplied in BIM as they are actually built and put into the field. While viewing the joists in BIM, contractors and other parties have the advantage of reviewing the actual size of the member and panel layouts.

Bridging Components
To further aid the design and construction of every aspect, Vulcraft has developed a bridging component for BIM to accurately depict all structural elements. Not only does the duct work, wiring and piping have to weave around the joists, but also the bridging elements. Having these elements in place leads to decreased errors on the job site and saves valuable time and effort by specialty contractors.

Specialty Joist Profiles
Vulcraft engineers and designers have taken joists to another level offering specialty joist profiles such as bowstrings, arches, scissors joists, double pitch, single pitch, and gable joists. Eliminating guesswork around specialty profiles reduces on-site error, saving money and valuable time and effort. Utilizing these specialty joists in BIM also enhances design review with customers.

Linking Components
Vulcraft can provide a number of things in BIM to benefit individual users. However, when used with an Integrated Project Delivery (IPD) system, BIM leverages the power of modeling to facilitate collaborative decision-making. IPD brings key construction management, fabricators and product manufacturing expertise together with design professionals and the owner earlier in the process. This produces a design that is optimized for quality, aesthetics, constructibility, affordability, timeliness and seamless flow into lifecycle management.

To download Vulcraft's BIM tools and for additional information on Vulcraft's BIM capabilities, please visit: https://vulcraft.com/DesignTools/#bim-tools

For more than 50 years, Nucor has been built on a sustainable model of recycling steel to produce new steel and steel products. Every Nucor steel mill uses an electric arc furnace (EAF) that melts recycled scrap and turns it into new steel products. EAFs are far less carbon-intensive and more energy-efficient than traditional blast furnace steelmaking, which makes steel by burning iron ore and coking coal.

Nucor is extending beyond its fence line to lower its carbon footprint and is committed to increasing the utilization of renewable energy. Nucor has invested in multiple virtual power purchase agreements to lower its carbon footprint and build partnerships to support the development of new clean energy infrastructure.

Nucor continues to develop product-specific Environmental Product Declarations and Health Product Declarations for all its steel products. Additionally, Nucor will work individually with any customer requiring product life cycle inventory data or other environmental footprint information

Embodied Carbon
Embodied carbon values for Vulcraft products can be found in the joists and deck Environmental Product Declarations (EPDs), available at https://www.nucor.com/sustainability/#resources. EPDs summarize the results of a cradle-to-gate life-cycle assessment, which includes the greenhouse gas emissions derived from raw material supply, transport, and manufacturing of steel joists and deck. The resulting global warming potential (GWP), along with other impact category indicators, can be found in the EPDs. Facility-specific GWP values are also available.

RECYCLED MATERIAL CONTENT

Joists/Structural Products - The bar steel for Vulcraft joists is typically obtained from one of the ten (10) Nucor bar mills. The average recycled content percentage for the Vulcraft joists is 97.0%. Specific project information is available from facility representatives.

Deck – Steel for decking produced by Vulcraft facilities is typically obtained from one of the seven (7) Nucor sheet mills. The Vulcraft deck products contain 56.5% recycled steel. Verco Decking, Inc. may obtain steel from sources outside of Nucor that may contain lower amounts of recycled content. Specific product information regarding Verco Decking, Inc. and individual Vulcraft locations is available from facility representatives.

All the steel produced by Nucor is 100% recyclable at the end of its useful life. Additional industry information is available online through the American Iron and Steel Institute at https://www.steel.org/sustainability/.

LEED Information
Nucor can provide a variety of documentation to help projects satisfy LEED credit requirements. Nucor publishes a Corporate Sustainability Report bi-annually which can be found here - https://www.nucor.com/sustainability. Additional LEED and/or other environmental information regarding specific Nucor Corporation products for a customer's specific order is available from facility representatives or the corporate office. A current contact list can be found here https://www.nucor.com/locations/.

Regional Materials – LEED 2009 Credit 5; LEED v4.1 Local Sourcing of Raw Materials
Nucor tracks the origin of scrap shipments to our mills. Nucor can approximate the amount of scrap recovered from any project site region. Nucor owns steel and steel products manufacturing facilities throughout the US that are often within 500 miles of the project site.

JOIST DESIGN INFORMATION

Standard Steel Joist Institute open web steel joists are designed for simple span uniform loads which result in a linearly sloped shear diagram for web forces and a parabolic moment diagram for chord forces. Projects often require that the open web joist support loads that are non-uniform or concentrated loads which alter the shape of the shear and moment diagrams. When specifying joists for these loads, the specifying professional should first attempt to specify a larger standard joist or possibly a KCS series joist (K-series Constant Shear). The interior webs for KCS joists are designed for 100% stress reversal and the chords are designed for a flat positive bending moment. The specified joist must have adequate moment and shear resistance throughout the entire length of the joist. To aid the specifying professional, Vulcraft has developed a free Joist Analysis Aid available at www.vulcraft.com. The SJI Code of Standard Practice Section 2.4 provides several options for Specifying Joist Design Loads.

When it becomes unrealistic to select a standard joist to support all the applied loads, Vulcraft will design the open web joists for the loads selected by the specifying professional (Option 5 in the SJI Code of Standard Practice Section 2.4). When choosing this option, it is crucial that the joist design loads be clearly presented with load diagrams or joist schedules so that Vulcraft can estimate and design the joists for the project. Examples of open web joist load diagrams are provided in the SJI Code of Standard Practice. To avoid confusion when using load diagrams, the specifier should avoid indicating web members. This allows Vulcraft to choose an efficient web configuration for the open web joist considering manufacturing efficiency and load carrying capability without questioning the intent of the indicated web members.

Load Combinations

For projects that have wind or seismic loads, it is important that Vulcraft be given the dead load and live load to properly design the open web joist for the building code required load combinations. The traditional SJI joist designation (i.e. 24K4) does not provide this information. The SJI joist designation specifies the total allowable uniform load for a given span and the uniform load which will cause a deflection of L/360 for that span. This does not provide Vulcraft with the actual load breakdown necessary for the required building code combinations.

As an alternative to the specification of SJI joist designations, it is possible to specify joists using the uniform load per foot designation. This designation follows the format show here:

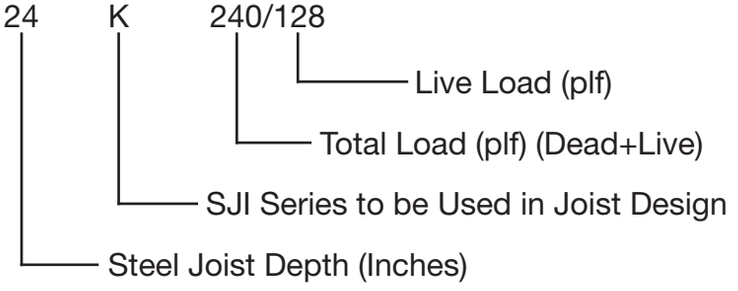

As can be seen, this designation clearly provides the breakdown necessary for the proper application of the building code required load combinations. In addition, for LH and DLH joists it allows specification of depths not included in the standard load tables. The total load / live load format can also be used for specification of panel point loads on Joist Girders and for the specification of concentrated loads applied to the joists.
The Open Web Joist / Joist Girder table on the following page gives examples of communicating the joist design information using either of the methods described above.

JOIST SCHEDULE (2)(3)(4)					
		Axial Load (5)			
Joist Mark Number	Designation (1) (Total Load/ Live Load)	Wind Load 1.0W (kips)	Seismic Load 1.0E (kips)	Add-Load (kips)	Comments
J1	20K 288/160	10.5	23.0	1.0	Office
J2	32LH 224/128	10.5	23.0	0.5	

(1) 26LH 245/135 (values noted at left are to define callout)

- Joist Live Load (plf)
- Joist Total Load (plf) (Dead + Live)
- SJI joist type
- Joist Depth

(2) Deflection Criteria: Live Load Deflection ≤ L/240 .
(3) See Net Wind Uplift Diagram for uplift loads on joists.
(4) See framing plan for additional loads to be included in joist design, including mechanical loads.
(5) Top chord axial load, Tension or Compression Load.

JOIST SCHEDULE						
		Loads for Combined Bending and Axial Check (2)				
Joist Mark Number	Designation (1)	Wind Top Chord Axial Load 0.6W	Dead Load	Roof Live Load L_r	Downward Wind load 0.6W	Net Wind Uplift load (3)
J1	30K7	20.0 kips	44 plf	63 plf	32 plf	150 plf

(1) Standard designation is minimum requirement. Joist Manufacturer to modify joist design as required for combined loading requirements.
(2) Joist manufacturer to use these load in the applicable code load combinations to design the joist for combined bending and axial.
(3) Net Wind Uplift is the result of the 0.6D+0.6W load combination.

JOIST SCHEDULE (1)(2) - PART 1							
		Uniform Loads				Axial Load (4)	
Joist Mark Number	Joist Depth & Series	Dead Load (plf)	Roof Live Load L_r (plf)	Downward Wind load 0.6W (plf)	Net Wind Uplift load (plf) (3)	Wind Axial Load 0.6W (kips)	Seismic Axial Load 0.7E (kips)
J1	24LH	63	50	32	150	14.4	17.5

JOIST SCHEDULE (1)(2) - PART 2							
End Moments (6)						Min. Moment of Inertia I_J (in^4)	Addload (kips) (5)
Live Load Continuity Moment L_r (kip-ft)		Wind Moment 0.6W (kip-ft)		Seismic Moment 0.7E (kip-ft)			
Left	Right	Left	Right	Left	Right		
6.7	6.7	± 22.0	∓ 22.0	± 27.5	∓ 27.5	216	0.5

(1) Joist manufacturer to use these loads in the applicable code load combinations.
(2) Deflection Criteria: Live Load Deflection ≤ L/240 .
(3) Net Wind Uplift is the result of the 0.6D+0.6W load combination.
(4) Top chord axial load, Tension or Compression Load.
(5) Addload is to be treated as a Dead Load "D" for load combinations.
(6) End Moment Sign Convention, Positive moments: + ——— +

(Note: schedule was split into 2 parts just to fit onto page. Schedule on plans should be one table)

Wind Uplift

Net Uplift

It is the responsibility of the specifying professional to determine the net uplift required for joist and Joist Girder design (Reference SJI Specification 5.12, SJI Code of Standard Practice Section 2.10 and SJI Technical Digest 6, "Structural Design of Steel Joists to Resist Uplift Loads"). While it may appear as an easy calculation, it is up to the specifying professional to determine the amount of dead load available to resist wind uplift loading. As an example, a project has a 26 psf dead load for joist design that includes 10 psf collateral load for future equipment. Because the collateral load may not actual be present on all joists, the design professional may determine that it is appropriate to only use a dead load = 26.0 psf - 10 psf = 16 psf in the load combinations with wind uplift loading. When specifying wind uplift loads on the structural plans, if the gross wind uplift load is specified, the specifying professional needs to also call out the dead load D to be used in the load combinations with wind uplift.

Net Uplift on 'K' Series Joist

Typically, the end web of 'K' series joists is a round bar which allows Vulcraft to manufacture these joists with 2 ½" deep bearing seats while maintaining the proper working point for the intersection of the end web and top chord. When net uplift is a design consideration the end web (a tension member under gravity loads) becomes a compression member. These round bars have limited capacity to resist compression and it may become necessary to use double angles. Should this occur it is no longer possible to fit the end webs and the bearing seats into the 2 ½" bearing depth and maintain the correct working point. The table below indicates net uplift reactions that can be reasonably expected to work with the standard 2 ½" bearing depth. If the net uplift reaction exceeds the values shown in this table, 5" bearing depths (like 'LH' series joists) will be required to accommodate the double angle end webs.

Joist Depth (in)	Net Uplift Unfactored Reaction (kips)
10	3.3
12	3.3
14	2.8
16	7.4
18	6.6
20	5.7
22	4.6
24	3.9
26	4.2
28	3.6
30	3.2

End Anchorage for Uplift

Chapter 5 of SJI Technical Digest 6, "Structural Design of Steel Joists to Resist Uplift Loads" provides the following guidance for end anchorage of steel joists due to uplift forces:

Welded Anchorage

The strength of the joist bearing seat for an uplift combination is a function of both the joist seat thickness and the length of the end anchorage welds. The minimum anchorage welds from the SJI Specifications may not develop the full capacity of the joist seat assembly for the specified uplift resistance. Where appropriate, a longer end anchorage weld length aids Vulcraft in providing an economical design of the joist bearing seat. Vulcraft will provide a seat of sufficient thickness and strength to resist the specified uplift end reaction.

Bolted Anchorage

Typically, joists and Joist Girders with bolted end anchorage also require a final connection by welding in order to provide lateral stability to the supporting member. However, only the bolts are relied on to provide uplift anchorage. The bolt type and diameter designated by the specifying professional shall provide sufficient tensile strength to resist the specified uplift end reaction. Higher strength bolts than the minimums required by the SJI specification may be required.

If the bearing seats are detailed for a bolted connection, bolts must be installed. If the bolts are not installed an equivalent welded connection may be permitted by the specifying professional, provided that the weld is deposited in the slot on the side farthest from the edge of the seat. Additional weld required to meet that specified for the welded connection shall be placed at a location on the seat away from the outer edge of the slot as shown in Figure 5.1.

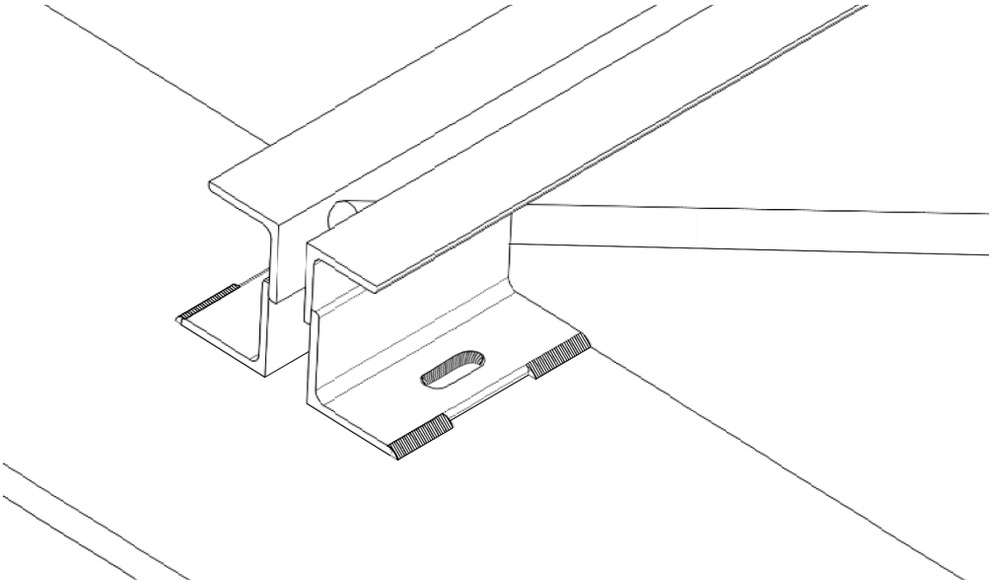

Figure 5.1 Detail for welding bearing seats detailed for a bolted connection

Bridging Requirements for Net Uplift

SJI Specification 5.12 requires where net uplift is a design requirement that a single line of bottom chord bridging shall be provided near the first bottom chord panel points. On Joist Girders , if the ends are not strutted and extended to the column stabilizer plates, bracing shall be provided near the first bottom chord panel points. It should also be noted that per SJI Specification 5.5.3.2 that the bottom chord bridging is permitted to be spaced independently of the row of top chord bridging. In simplified terms, this indicates that bridging need not align from top chord to bottom chord of the joist as shown below.

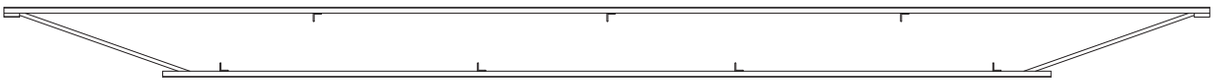

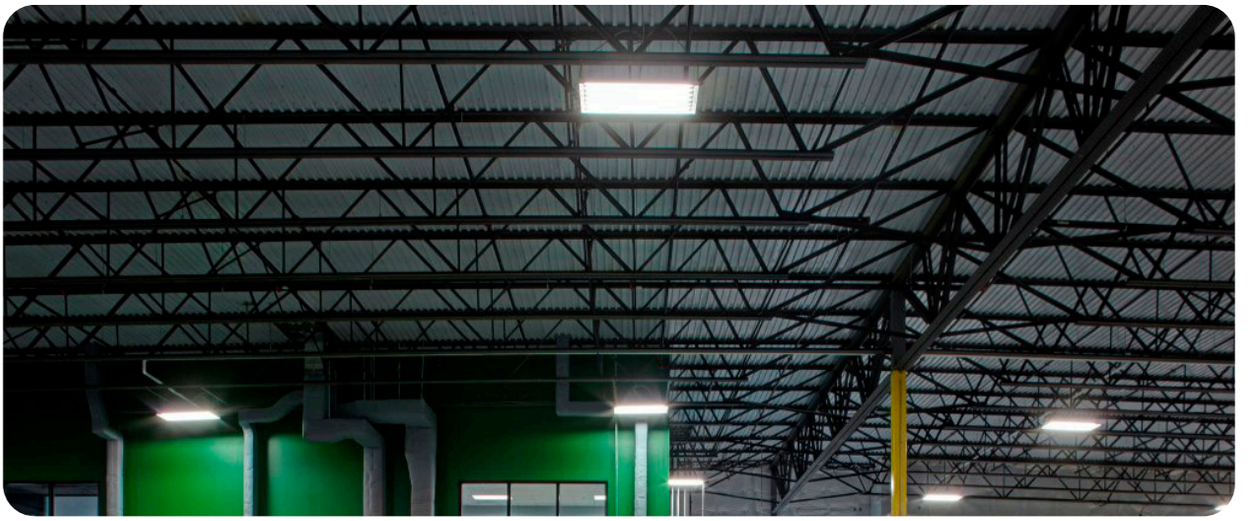

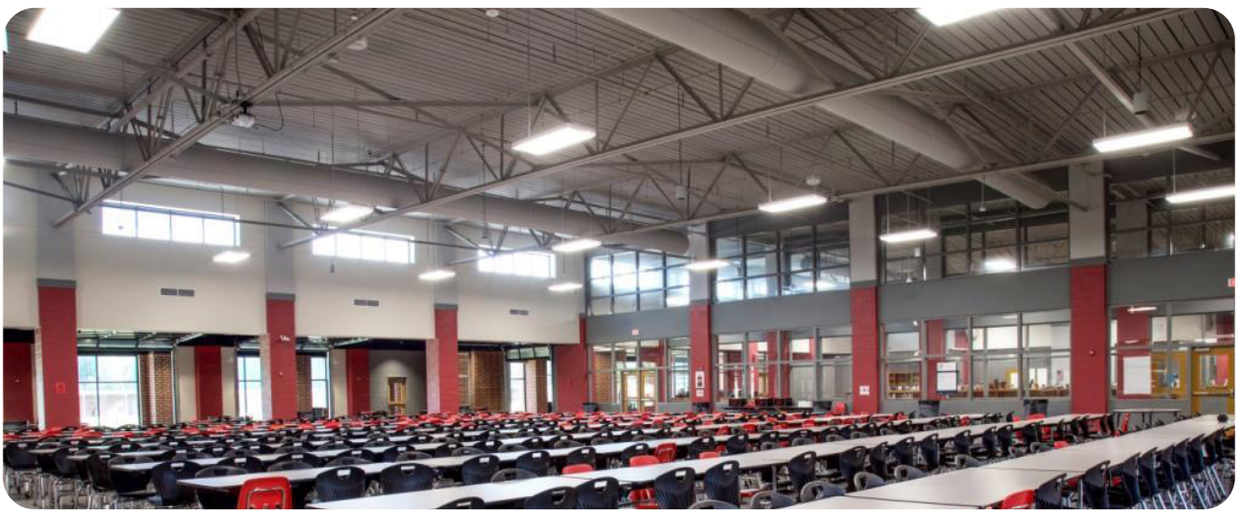

Open Web Steel Joists and Joist Girders in Moment Resistant Frames

The specifying professional is referred to the SJI Technical Digest 11 “Design of Lateral Load Resisting Frames Using Steel Joists and Joist Girders” for a more complete treatment of this topic. Generally, the contract documents specify attachment of the bottom chord only after all dead load has been applied to the member resulting in gravity load or continuity moments due to live load only.

When using open web joists as part of a moment frame, Vulcraft prefers that joists be called out as LH-Series with 5” minimum bearing depths. Vulcraft has found that the axial loads from wind and or seismic moments will increase some of the components to sizes more commonly used in a LH-Series joist and it will be more economical than modifying a K-Series joist.

When joists or Joist Girders are used as a component of a moment resistant frame, the continuity (usually live load) and lateral (wind and/or seismic) moments must be provided for each end of the affected Joist Girder. Vulcraft will then design the Joist Girder as simply supported for the full gravity load. The end moments are then applied to the Joist Girder using the appropriate load combinations. The critical forces are identified and the Joist Girder members are sized accordingly.

One of the most important considerations of using open web joists or Joist Girders in a moment resistive frame is the connection to the column. As with wide flange connections, special provisions must be made to develop the required moment capacity. As can be seen in Figure 1, the use of standard seats results in an eccentric moment due to the depth of the seat. This moment must be resisted by the weld group connecting the joist or Joist Girder seat to the cap plate of the column.

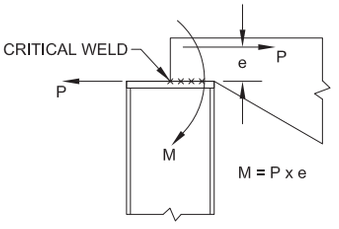

FIGURE 1

Vulcraft has conducted extensive testing of the maximum eccentric top chord force capacity of Joist Girders. Based on this testing the maximum horizontal load for 7 ½” girder bearing seats are presented in Table 1 below.

Table 1

Joist Girder (7.5” Seat) Top Chord Leg Size	ASD P_a* kips	LRFD ϕP_n* kips
2.5”	4	6
3.0”	8	12
3.5” and Larger	10	15

*These values are based on using 3/4 inch A325 bolts and a minimum of two 1/4 inch fillet welds 5 inches long along the sides of the seat. Vulcraft must be notified of seat forces for final seat design.

MOMENTS

If the axial load due only to the lateral moment does not exceed the values in Table 1, a strap angle connection as shown in Figure 2 can be used to resist the continuity moments. By tying the Joist Girder top chord ends together, the Joist Girder to cap plate connection need only resist the lateral loads **(the strap angles do not transfer lateral moments)**. The design of such strap angles to resist the continuity moments is the responsibility of the specifying professional.

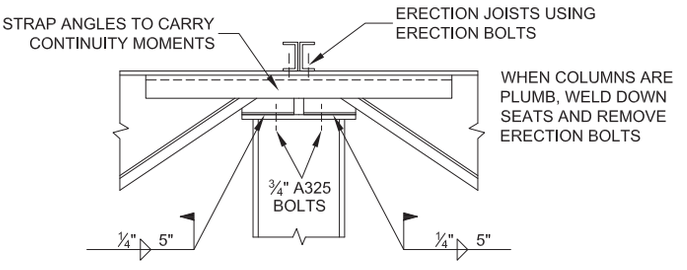

FIGURE 2

When end moments are too large for the seat to resist, it is necessary to utilize a moment plate as shown in Details A-F on page 19. The use of this simple plate virtually eliminates all eccentricity problems.

By using the following equations and Table 2 the specifying professional can determine the minimum top chord width for most Joist Girders. If the end moments are very large, the Joist Girder loads and/or spacing vary, or other special conditions exist, a more exact analysis is required. Once the chord width is known, the specifying professional can easily size the moment plate and its weld requirements to complete the connection detail.

EQUATION 1 (ODD NUMBER OF JOIST SPACES)

$$A = \frac{0.028P}{D}(N^2 S - 0.67N + 0.67 - S)$$

EQUATION 2 (EVEN NUMBER OF JOIST SPACES)

$$A = \frac{0.028P}{D}(N^2 S - 0.67N + 0.67)$$

P= Panel Point Load (kips)
N= Number of joist spaces
S= Joist Spacing (ft)
D= Joist Girder depth (in)

Table 2

A	Minimum Top Chord Width
0.95-1.19	6”
1.20-1.78	7”
1.79-2.48	8”
2.49-3.75	9”
3.76-4.76	11”
4.78-8.44	13”
Greater than 8.44	Consult Vulcraft

Please note that this chart is to be used only for designing moment plates. It is not intended as a general detailing aid.
*The bearing seat width may be larger than the top chord width. Contact Vulcraft if seat width is needed for determining column plate sizes

Presented below are six suggested details for a moment resistive connection involving roof Joist Girders. Similar details should be utilized for longspan joists with end moments. In all cases, the bottom chord is to be connected to the column with a vertical stabilizer plate which is to be sized to carry the required load and obtain required weld (use 6 x 6 x 3/4 plate minimum for Joist Girders).

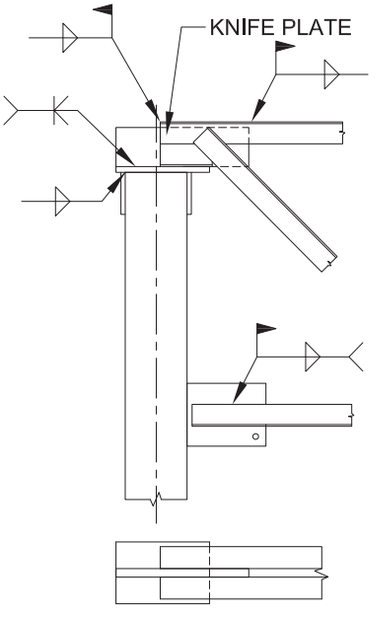

Detail "A"

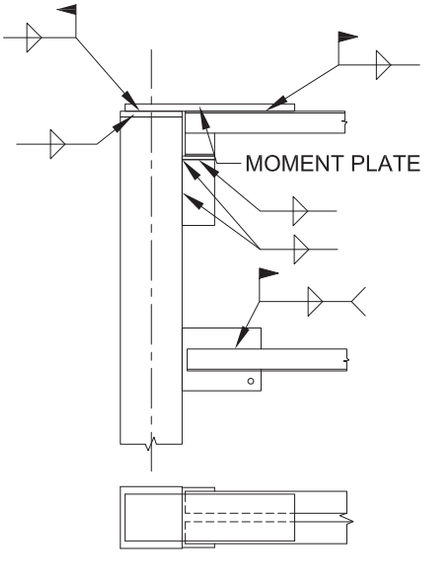

Detail "B"

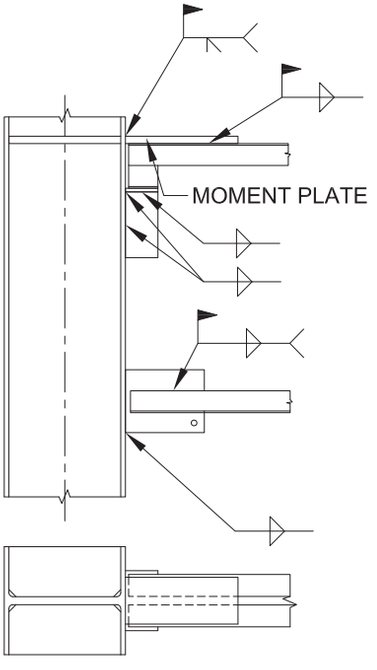

Detail "C"

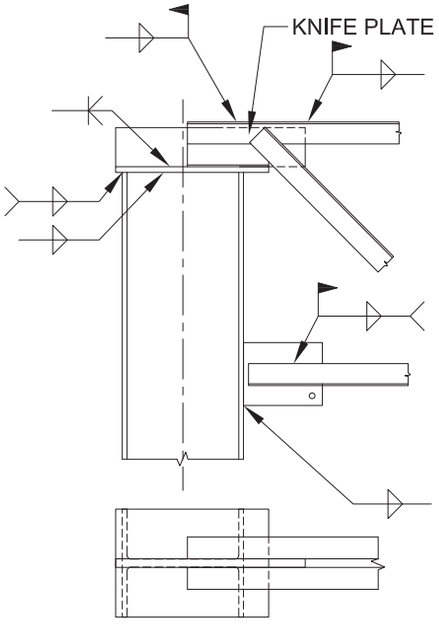

Detail "D"

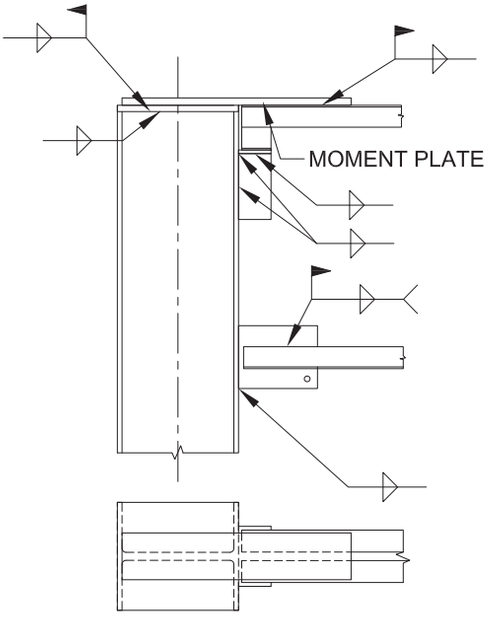

Detail "E"

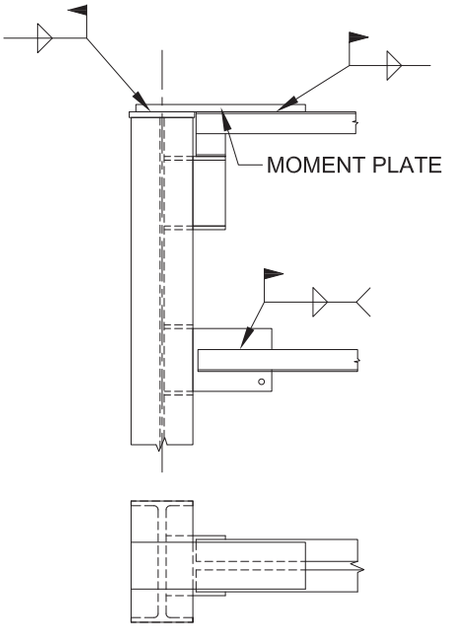

Detail "F"

AXIAL LOADS

Axial Loads

The design of open web steel joists and Joist Girders for additional axial loads shares many similarities to the design of joists and Joist Girders used in moment resistant frames. The specifying professional must clearly communicate to Vulcraft the type of load responsible for the axial load so that the appropriate building code required load combinations can be applied.

Like open web steel joists and Joist Girders used in moment resisting frames, one of the most critical concerns is the connection of the joist or Joist Girder to the supporting structure. As shown in Figure 1 of the section on open web steel joists and Joist Girders used in moment resisting frames an eccentric moment exists between the supporting structure and the centroid of the top chord due to the joist or Joist Girder bearing depth. Again, this moment must be resisted by the weld group connecting the joist or Joist Girder seat to the supporting structure.

When axial loads are too large for the seat to resist, it is necessary to utilize additional straps or ties like those shown below. Design of these straps or ties is the responsibility of the specifying professional.

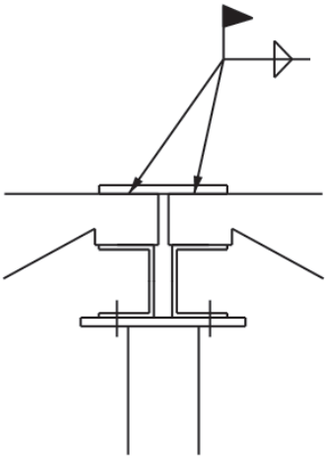

Detail "A"

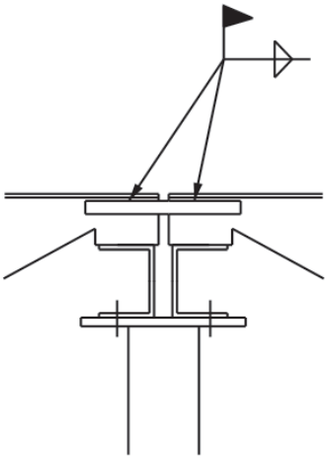

Detail "B"

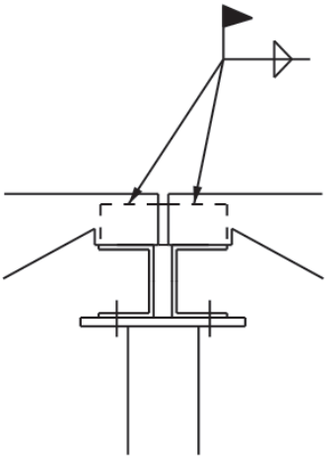

Detail "C"

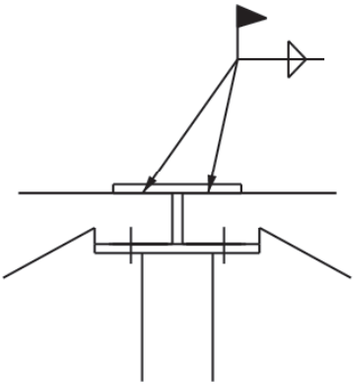

Detail "D"

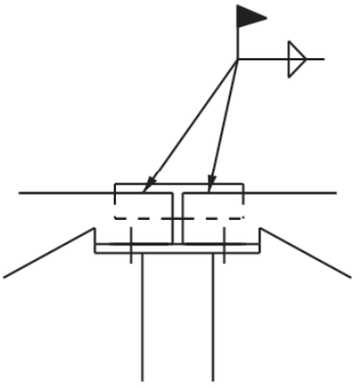

Detail "E"

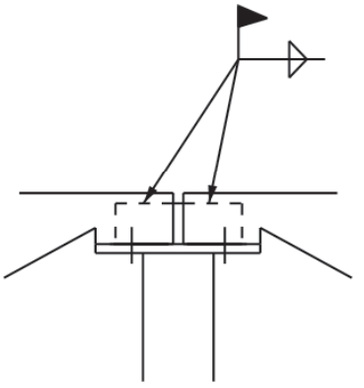

Detail "F"

JOIST MOMENT OF INERTIA AND DEFLECTION

The moment of inertia of K-Series, LH-Series and DLH-Series joists in the load table can be estimated using the following equations:

$I_J = 26.767\ (W)\ (L^3)\ (10^{-6})$ ASD, US Customary Units with W in plf and L = Span – 0.33 in feet

$I_J = 2.6953\ (W)\ (L^3)\ (10^{-5})$ ASD, Metric Units with W in kN/m and L = Span -102 in mm

The equations shown above provide an approximate "gross" moment of inertia, not including the effects of shear deformation. An open web steel joist can be expected to have approximately 15 percent more deformation than a solid web member. When a conventional beam formula is used to calculate joist deflection, a factor of 1.15 should be applied to account for the web shear deformation.

Example:

Find the Inertia for a 24K7 @ 40'-0":

SJI tables 253 / 148

$I_J = 26.767\ (W)\ (L^3)\ (10^{-6})$ where W = RED figure in the Load Table and L = (Span – 0.33) in feet.

$I_J = 26.767(148)\ (40\text{-}0.33)^3(10^{-6}) = 247\ in^4$

Compute Joist Deflection:

Increase deflection 15% to account for shear deformation in webs.

$(1.15)(5WL^4/384EI)$

$(1.15)(5)(148/12)\ [(40\text{-}.33) \times 12)]^4 / [(384)(29 \times 10^{-6})\ (247)] = 1.32"$

Verify the RED number represents the joist loading that produces L/360 deflection

L/360 = (40-.33) x 12/360 = 1.32"

The 15 percent approximation also applies to the deflection equations when using the Joist Girder moment of Inertia equations.

Having determined the moment of inertia and live load deflection requirements, it is not typically necessary to specify a total load deflection limit. K-Series, LH-Series, DLH Series and Joist Girders are fabricated with camber, (ref. SJI 100 sect 4.6), and since these are steel structural members, 2018 IBC Table 1604.3 note G states the dead load shall be taken as zero in determining the total load deflection.

The Weight Tables list the approximate weight in pounds per linear foot (kiloNewtons per meter) for a Joist Girder supporting the concentrated panel point loads shown. Please note that the weight of the Joist Girder must be included in the panel point load (See Code of Standard Practice for Steel Joists and Joist Girders, Section 2.4 for examples).

For calculating the approximate deflection or checking for ponding, the following formulas in U. S. Customary Units and Metric Units may be used in determining the approximate moment of inertia of a Joist Girder.

I_{JG} = 0.027 NPLd: where N = number of joist spaces;

P = Total panel point load in kips (unfactored); L = Joist Girder length in feet; and d = effective depth of the Joist Girder in inches, or,

I_{JG} = 0.3296 NPLd: where N = number of joist spaces;

P = Total panel point load in kiloNewtons (unfactored); L = Joist Girder length in millimeters and d = effective depth of the Joist Girder in millimeters.

The Joist Girder manufacturer should be contacted when a more exact Joist Girder moment of inertia must be known.

* For further reference, refer to Steel Joist Institute Technical Digest Number 11, “Design of Lateral Load Resisting Frames Using Steel Joists and Joist Girders”.

FLOOR VIBRATION

Floor vibration due to human activity occurs, in varying degrees, in all types of building construction. Unlike steady state vibration due to machinery, which can be isolated, vibration due to human occupancy is inconsistent in both amplitude and frequency and must be controlled by proper design of the elements supporting the floor.

The Steel Joist Institute and Nucor Research and Development have been studying this phenomenon for years. Laboratory research continues to be performed along with gathering measurements on numerous buildings, exhibiting both good and bad characteristics, using seismic recording instruments. AISC Design Guide 11 “Vibrations of Steel-Framed Structural Systems Due to Human Activity” Second Edition and SJI Technical Digest 5 “Vibration of Steel Joist Concrete Floor Slabs” discuss in detail methods for calculating vibration characteristics of open web steel joist supported floors. Vibration of Vulcraft steel joist/steel deck supported concrete floors can easily be checked for walking excitation utilizing Vulcraft’s new Vibration Analysis Tool, https://vulcraft.com/DesignTools .

The clear majority of floors, including those utilizing steel joists, do not exhibit floor vibrations severe enough to be considered objectionable. However, human sensitivity to vibratory motion varies, and a satisfactory framing solution is dependent upon the sound judgment of qualified design professionals.

Floor vibration is measured in terms of acceleration, displacement amplitude, and frequency. These factors are not objectionable to all people at the same level since human sensitivity and tolerance for vibration varies.

Definitions

Acceleration - is the primary measure of vibration level used in the assessment of human comfort, and is usually expressed as a percentage of the acceleration due to gravity.

Frequency - is the number of cycles per second or Hz.

Damping - is the loss of energy over time in a vibrating system and is usually presented as a percent of critical damping.

Critical Damping - is the damping required to bring a displaced system to rest without oscillation.

Observations

The following observations are recommended only as a guide to the design professional:

OPEN FLOOR AREAS are often subject to vibration issues. Modern “electronic offices” tend to have lower live loading and lower damping. Partitions, file cabinets, book stacks, heavy furnishings and even crowds of people provide additional damping and reduce vibration levels.

PARTITIONS increase damping more than any other element and often eliminate vibration issues. They are effective either above or below a floor as long as they are full height partitions connected to the floor above and below the partition. Consideration should be given to potential changes in occupancy of the floor over the life of the building.

SUPPORT FRAMING BEAMS can contribute to floor vibration. The natural frequency and amplitude of both the joists and supporting Joist Girders or hot rolled girders must be calculated. In this manner, the resulting system acceleration, displacement, and frequency can be determined.

TYPE of STEEL JOIST END CONNECTION to a girder can significantly affect the natural frequency and the effective mass of floor framing systems subjected to walking motion. Joists fabricated with flush framed top chord bolted connections, Ecospan® flush joist seats, or stiffened top chord bearing seats have been shown to reduce floor vibration versus standard top chord bearing seats.

BRIDGING of all standard types provides equal floor vibrational characteristics.

THICKER FLOOR SLABS can be an economical solution for controlling floor vibrations. The additional thickness increases floor system stiffness transverse to the joists, often improving vibration characteristics. The additional mass of the system can also reduce vibration levels.

WIDER JOIST SPACINGS improve vibrational characteristics only when combined with thicker floor slabs. The resulting increase in joist size does not contribute significantly. When used with a thicker slab, greater resistance to vibration can be achieved, and, since fewer pieces must be installed, may be more economical.

SERVICEABILITY

NON-COMPOSITE JOISTS are considered to be fully composite joists in vibration analyses. Human-induced loads typically cause mid-bay displacement amplitudes smaller than 0.01 in. - implying very low horizontal shears between the joists and the slab. Also, deck fasteners, including spot welds and screws, provide enough slip resistance to warrant using the composite transformed moment of inertia in vibration analyses.

LONGER FLOOR SPANS have many advantages over shorter spans both in construction and vibrational response. There are many long spanning joist supported floors that have satisfactory vibration performance.

INCREASING JOIST STIFFNESS beyond that required to meet the live load deflection limitations can be beneficial when only a small decrease in predicted acceleration is needed. Increase the stiffness of the joist or Girder (whichever has the lowest frequency) until the criterion is met. When the joist and girder have the same frequency, increase the stiffness of both until the required vibration criteria is achieved.

PC – based software for the evaluation of joist supported floor systems subjected to walking, rhythmic, or sensitive equipment / occupants is available from:
STRUCTURAL ENGINEERS, INC
537 Wisteria Drive
Radford, VA 24141
Phone (540) 731-3330
www.floorvibe.com

Conclusions
Partitions will usually eliminate vibration issues. When a floor cannot have partitions, changing the type of joist end connection, increasing the slab thickness, increasing the joist spacing and/or increasing the joist or girder stiffness can be economical and effective ways to reduce vibrations.

For more information refer to the Steel Joist Institute Technical Digest No. 5 “Vibration of Steel Joist-Concrete Slab Floors”, and the AISC Steel Design Guide 11 “Vibrations of Steel-Framed Structural Systems Due to Human Activity” Second Edition.

TYPICAL JOIST CONNECTIONS

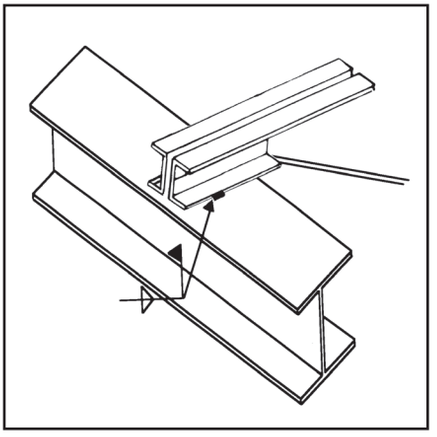

ANCHORAGE TO STEEL
SEE SJI SPECIFICATION 5.4.2

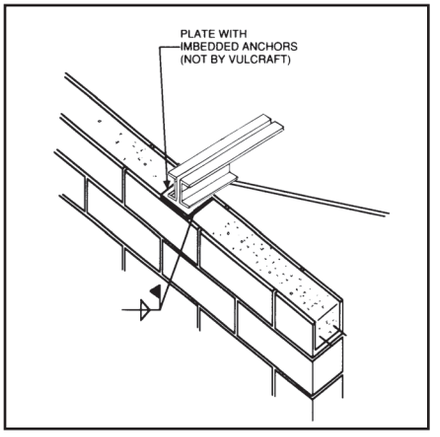

ANCHORAGE TO MASONRY
SEE SJI SPECIFICATION 5.4.1

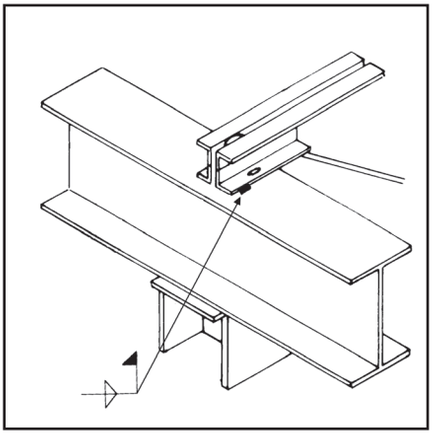

BOLTED CONNECTION
TYPICALLY REQUIRED AT COLUMNS

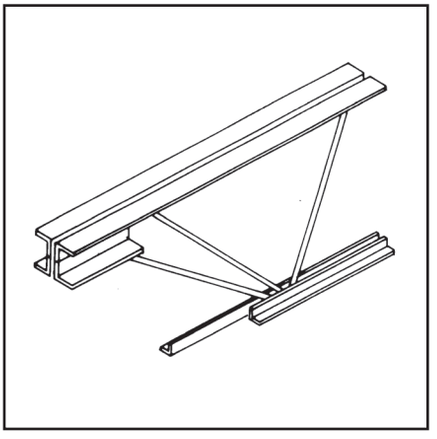

CEILING EXTENSION

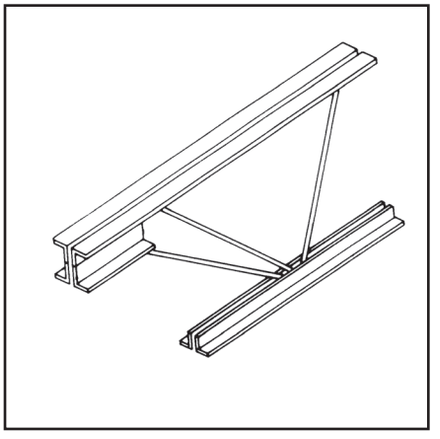

BOTTOM CHORD STRUT

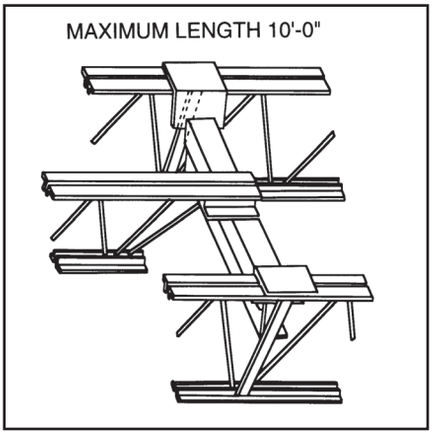

HEADERS
Note: If header does not bear at a Joist Panel Point add extra web in field as shown.
EW or Panel Point by Vulcraft

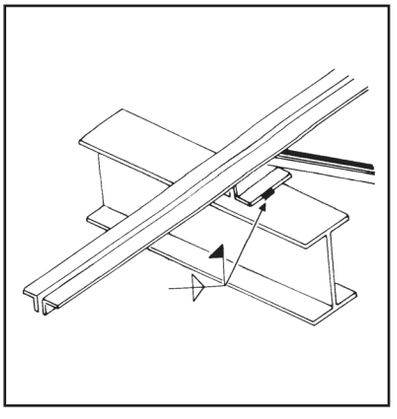

TOP CHORD EXTENSION

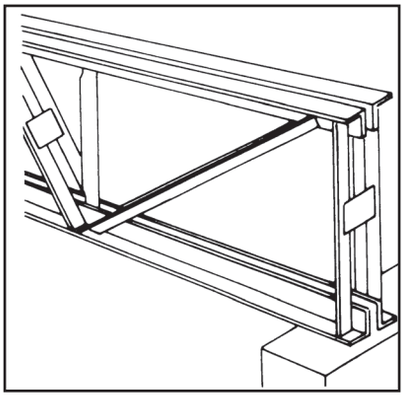

SQUARE END
See SJI Specification 5.5.6. Cross bridging required near the end of bottom bearing joist.

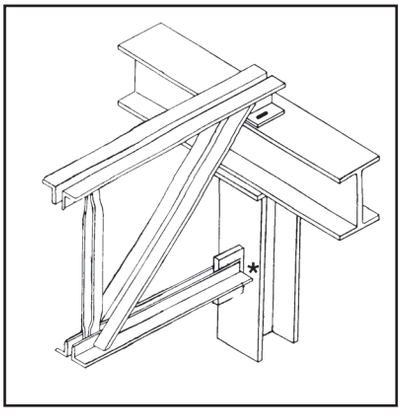

BOTTOM CHORD EXTENSION
*If bottom chord extension is to be bolted or welded the specifying professional must provide axial loads on structural drawings.

SPECIAL PROFILES

Non-Standard Configurations

In addition to the standard configurations Vulcraft can also provide the following joist configurations:

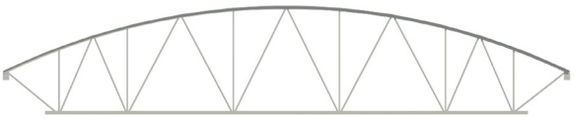

Bowstring



Arch Chord



Scissor

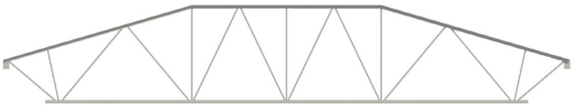

Multi-Pitch

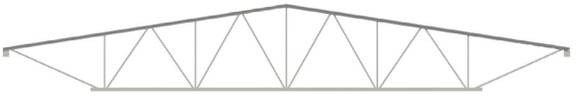

Double Pitch



Single Pitch

In the fabrication of joists, a sufficient end depth must be provided. The appropriate end depth varies with the size, shape, and loading of the joist. The end depth is the distance between the top chord and the bottom chord or the projection of the bottom chord near the center line of the support. End depth requirements increase for bottom-chord-bearing joists and sloped joists. An absolute minimum end depth of 12” must be provided in all cases, with 18” minimum end depth recommended in most cases and for large joists it will increase. Contact Vulcraft for minimum end depth requirements.

Note that both Scissor and Arched Chord type joists require special attention for their supports due to the horizontal deflections. These joists can be designed with either pinned end restraints at both ends or pinned on one end with a roller on the other. The pinned/pinned condition may result in significant horizontal forces being applied to the structure. Analyzing the effect of increasing the stiffness of these joists shows little change in horizontal force magnitude with significant increase in stiffness. The pinned/roller condition requires that the roller bearing condition allow for horizontal movement. In this case increasing the joist stiffness does affect the horizontal displacement.

PLEASE CONTACT EITHER YOUR LOCAL DISTRICT SALES OFFICE OR THE NEAREST VULCRAFT MANUFACTURING FACILITY FOR LIMITATIONS IN DEPTH OR LENGTH.

Camber

Standard Configuration:

Unless specifically noted otherwise, joists and Joist Girders will be manufactured with camber in accordance with the Steel Joist Institute Specification 4.6 Camber. **Requirements for less than full camber near walls or other structural elements must be clearly noted on the structural drawings.**

Non-Standard Configurations:

The Design Professional shall provide on the structural drawings the desired camber in inches. If the camber is not specified, Vulcraft will camber using the values for standard joist configurations based on the top chord length or possibly no camber for certain scissor, arched, bowstring or gable profiles.

Bolted Field Splices:

When the overall length of the joists are too long for shipping or where field conditions require (ex. In existing construction where joist will be installed from underneath) the joists will be supplied in two or more pieces to be field bolted together at the jobsite. Per SJI Technical Digest No. 9 it is the erectors responsibility to match joist segments as indicated on the joist erection drawings provided by Vulcraft. **Two dissimilar segments may "fit" together, but if they are not matched as indicated then proper camber or profile will not be maintained. Vulcraft will not accept the responsibility for joists erected with mismatched segments.**

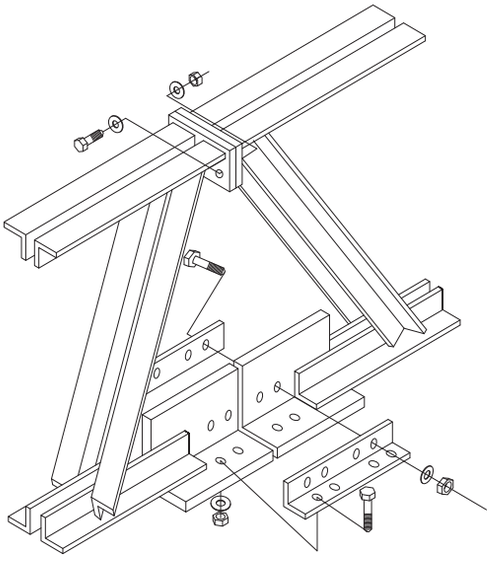

Bridging Requirements of Joists

Series	Section Numbers[1]	Erection Stability Spans[3]		Number of Rows of Top Chord Bridging Req'd					
		Depth (in.)	Span (ft.)[2]	1	2	3	4	5	6
K	#1	12	23	17	>17-26	>26-28			
		14	27	17	>17-26	>26-28			
	#2	16	29	21	>21-30	>30-32			
	#3	16	30	18	>18-26	>26-40			
		18	31	18	>18-26	>26-40			
		20	32	18	>18-26	>26-40			
	#4	16	32	20	>20-30	>30-41	>41-48		
		18	32	20	>20-30	>30-41	>41-48		
		20	34	20	>20-30	>30-41	>41-48		
		22	34	20	>20-30	>30-41	>41-48		
		24	36	20	>20-30	>30-41	>41-48		
	#5	12-14	Not Req'd	20	>20-30	>30-42	>42-48		
		16	32	20	>20-30	>30-42	>42-48		
		18	33	20	>20-30	>30-42	>42-48		
		20	34	20	>20-30	>30-42	>42-48		
		22	35	20	>20-30	>30-42	>42-48		
		24	38	20	>20-30	>30-42	>42-48		
		26	38	28	>28-41	>41-52			
	#6	14-16	Not Req'd	20	>20-31	>31-42	>42-48		
		18	35	20	>20-31	>31-42	>42-48		
		20	36	20	>20-31	>31-42	>42-48		
		22	36	20	>20-31	>31-42	>42-48		
		24	39	20	>20-31	>31-42	>42-48		
		26	39	28	>28-41	>41-54	>54-56		
		28	40	28	>28-41	>41-54	>54-56		
	#7	16-18	Not Req'd	23	>23-34	>34-48			
		20	39	23	>23-34	>34-48			
		22	40	23	>23-34	>34-48			
		24	43	23	>23-34	>34-48			
		26	43	29	>29-44	>44-60			
		28	43	29	>29-44	>44-60			
		30	44	29	>29-44	>44-60			
	#8	24	43	25	>25-39	>39-48			
		26	44	29	>29-44	>44-60			
		28	44	29	>29-44	>44-60			
		30	45	29	>29-44	>44-60			
	#9	16-18	Not Req'd	22	>22-34	>34-48			
		20	39	22	>22-34	>34-48			
		22	40	22	>22-34	>34-48			
		24	44	22	>22-34	>34-48			
		26	44	29	>29-44	>44-60			
		28	45	29	>29-44	>44-60			
		30	45	29	>29-44	>44-60			

*See Page 37 for Notes

Bridging Requirements of Joists

Series	Section Numbers[1]	Erection Stability Spans[3]		Number of Rows of Top Chord Bridging Req'd					
		Depth (in.)	Span (ft.)[2]	1	2	3	4	5	6
K	#10	18-24	Not Req'd	22	>22-38	>38-48			
		26	49	29	>29-48	>48-60			
		28	49	29	>29-48	>48-60			
		30	50	29	>29-48	>48-60			
	#11	22	Not Req'd	24	>24-39	>39-44			
		30	52	34	>34-49	>49-60			
	#12	24	Not Req'd	25	>25-43	>43-48			
		26	Not Req'd	29	>29-47	>47-60			
		28	53	29	>29-47	>47-60			
		30	54	29	>29-47	>47-60			

1. Last Digit(s) of joist designation.
2. For spans EQUAL TO OR EXCEEDING that shown, one of the rows nearest mid-span must be bolted diagonal type. For spans through 60 feet, the bolted diagonal bridging must be installed BEFORE releasing the hoisting lines. FOR SPANS OVER 60 FEET, ALL BRIDGING ROWS MUST BE BOLTED DIAGONAL TYPE. Spans over 60 feet through 100 feet require two rows of bolted diagonal bridging to be installed, at one-third points, BEFORE releasing the hoisting lines. Spans over 100 feet require ALL rows of bolted diagonal bridging to be installed BEFORE releasing the hoisting lines.
3. See SJI Specification Section 5.2 for definition of span.

Bridging Requirements of Joists

Series	Section Numbers[1]	Erection Stability Spans[3]		Number of Rows of Top Chord Bridging Req'd								
		Depth (in.)	Span (ft.)[2]	1	2	3	4	5	6	7	8	9
LH / DLH	#02	18	33	20	>20-30	>30-40	>40					
		20	33	20	>20-30	>30-40	>40					
	#03	20	38	20	>20-30	>30-40	>40					
		24	35	20	>20-30	>30-40	>40					
	#04	24	39	22	>22-33	>33-44	>44-55	>55				
	#05	24	40	22	>22-33	>33-44	>44-55	>55				
		28	42	22	>22-33	>33-44	>44-55	>55				
	#06	24	45	26	>26-45	>45-60	>60-75	>75				
		28	46	26	>26-45	>45-60	>60-75	>75				
		32	47	26	>26-45	>45-60	>60-75	>75				
	#07	28	54	26	>26-45	>45-60	>60-75	>75				
		32	47	26	>26-45	>45-60	>60-75	>75				
		36	47	26	>26-45	>45-60	>60-75	>75				
	#08	28	54	26	>26-45	>45-60	>60-75	>75				
		32	55	26	>26-45	>45-60	>60-75	>75				
		36	47	26	>26-45	>45-60	>60-75	>75				
		40	48	26	>26-45	>45-60	>60-75	>75				
	#09	32	60	26	>26-48	>48-64	>64-80	>80				
		36	57	26	>26-48	>48-64	>64-80	>80				
		40	48	26	>26-48	>48-64	>64-80	>80				
		44	53	26	>26-48	>48-64	>64-80	>80				
	#10	All Depths Spanning 60'+ Req. EX Bridging		28	>28-54	>54-72	>72-90	>90				
	#11			30	>30-54	>54-72	>72-90	>90-108	>108			
	#12			34	>34-55	>55-74	>74-92	>92-111	>111			
	#13			36	>36-63	>63-84	>84-105	>105-126	>126			
	#14			38	>38-64	>64-86	>86-107	>107-129	>129			
	#15			42	>42-73	>73-98	>98-122	>122-147	>147			
	#16-#17			44	>44-75	>75-100	>100-125	>125-150	>150-175	>175		
	#18-#20			52	>52-78	>78-104	>104-130	>130-156	>156-182	>182-208	>208-234	>234
	#21-#25			60	>60-90	>90-120	>120-150	>150-180	>180-210	>210		

1. Last Digit(s) of joist designation.
2. For spans EQUAL TO OR EXCEEDING that shown, one of the rows nearest mid-span must be bolted diagonal type. For spans through 60 feet, the bolted diagonal bridging must be installed BEFORE releasing the hoisting lines. FOR SPANS OVER 60 FEET, ALL BRIDGING ROWS MUST BE BOLTED DIAGONAL TYPE. Spans over 60 feet through 100 feet require two rows of bolted diagonal bridging to be installed, at one-third points, BEFORE releasing the hoisting lines. Spans over 100 feet require ALL rows of bolted diagonal bridging to be installed BEFORE releasing the hoisting lines.
3. See SJI Specification Section 5.2 for definition of span.

K, LH, and DLH SERIES JOISTS
MAXIMUM JOIST SPACING FOR DIAGONAL BRIDGING[1]

JOIST DEPTH	BRIDGING ANGLE SIZE – (EQUAL LEG ANGLE)[2]							
	1 x 7/64 (25 x 3 mm) **r = 0.20”** (5.08 mm)	**1-1/4 x 7/64** (32 x 3 mm) **r = 0.25”** (6.35 mm)	**1-1/2 x 7/64** (38 x 3 mm) **r = 0.30”** (7.62 mm)	**1-3/4 x 7/64** (45 x 3 mm) **r = 0.35”** (8.89 mm)	**2 x 1/8** (50 x 3 mm) **r = 0.40”** (10.16 mm)	**2 ½ x 5/32** (64x 4 mm) **r=0.50”** (12.70 mm)	**3 x 3/16** (76 x 5 mm) **r = 0.60”** (15.24 mm)	**3 ½ x 1/4** (89 x 6 mm) **r = 0.70”** (17.78 mm)
in. (mm)	**ft.-in. (mm)**	**ft.-in. (mm)**	**ft.-in. (mm)**	**ft.-in. (mm)**	**ft.-in. (mm)**	**ft.-in. (mm)**	**ft.-in. (mm)**	**ft.-in. (mm)**
12” (305)	6’-7” (2007)	8’-3” (2514)	9’-11”(3022)	11’-7” (3530)	13’-3”(4038)	16’-7”(5055)	19’-11”(6070)	23’-3”(7086)
14” (356)	6’-6” (1981)	8’-3” (2514)	9’-11”(3022)	11’-7” (3530)	13’-3”(4038)	16’-7”(5055)	19’-11”(6070)	23’-3”(7086)
16” (406)	6’-6” (1981)	8’-2” (2489)	9’-10”(2997)	11’-7” (3530)	13’-3”(4038)	16’-7”(5055)	19’-11”(6070)	23’-3”(7086)
18” (457)	6’-6” (1981)	8’-2” (2489)	9’-10”(2997)	11’-6” (3505)	13’-3”(4038)	16’-7”(5055)	19’-11”(6070)	23’-3”(7086)
20” (508)	6’-5” (1955)	8’-2” (2489)	9’-10”(2997)	11’-6” (3505)	13’-2”(4013)	16’-7”(5055)	19’-11”(6070)	23’-3”(7086)
22” (559)	6’-4” (1930)	8’-1” (2463)	9’-10”(2997)	11’-6” (3505)	13’-2”(4013)	16’-6”(5029)	19’-11”(6070)	23’-3”(7086)
24” (610)	6’-4” (1930)	8’-1” (2463)	9’-9” (2971)	11’-5” (3479)	13’-2”(4013)	16’-6”(5029)	19’-10”(6045)	23’-3”(7086)
26” (660)	6’-3” (1905)	8’-0” (2438)	9’-9” (2971)	11’-5” (3479)	13’-1”(3987)	16’-6”(5029)	19’-10”(6045)	23’-2”(7061)
28” (711)	6’-3” (1905)	8’-0” (2438)	9’-8” (2946)	11’-5” (3479)	13’-1”(3987)	16’-6”(5029)	19’-10”(6045)	23’-2”(7061)
30” (762)	6’-2” (1879)	7’-11 (2413)	9’-8” (2946)	11’-4” (3454)	13’-1”(3987)	16’-5”(5004)	19’-10”(6045)	23’-2”(7061)
32” (813)	6’-1” (1854)	7’-10”(2387)	9’-7” (2921)	11’-4” (3454)	13’-0” (3962)	16’-5”(5004)	19’-9”(6020)	23’-2”(7061)
36” (914)	5’-11”(1803)	7’-9” (2362)	9’-6” (2895)	11’-3” (3429)	12’-11”(3973)	16’-4”(4979)	19’-9”(6020)	23’-1”(7035)
40” (1016)	5’-9”(1753)	7’-7” (2311)	9’-5” (2870)	11’-2” (3403)	12’-10”(3911)	16’-4”(4979)	19’-8”(5994)	23’-1”(7035)
44” (1118)	5’-6”(1676)	7’-5” (2260)	9’-3” (2819)	11’-0” (3352)	12’-9” (3886)	16’-3”(4953)	19’-7”(5969)	23’-0”(7010)
48” (1219)	5’-4”(1626)	7’-3” (2209)	9’-2” (2794)	10’-11”(3327)	12’-8” (3860)	16’-2”(4928)	19’-7”(5969)	22’-11”(6985)
52” (1321)	5’-0”(1524)	7’-1”(2159)	9’-0” (2743)	10’-10” (3302)	12’-7” (3835)	16’-1”(4902)	19’-6”(5943)	22’-11”(6985)
56” (1422)	4’-9”(1448)	6’-10”(2083)	8’-10”(2692)	10’-8” (3251)	12’-5” (3784)	16’-0”(4877)	19’-5”(5918)	22’-10”(6960)
60” (1524)	4’-4”(1321)	6’-8”(2032)	8’-7” (2616)	10’-6” (3200)	12’-4” (3759)	15’-10”(4826)	19’-4”(5893)	22’-9”(6935)
64” (1626)	**	6’-4”(1931)	8 -5” (2565)	10’-4” (3149)	12’-2” (3708)	15’-9” (4801)	19’-3”(5867)	22’-8”(6909)
68” (1727)	**	6’-1”(1854)	8’-2” (2489)	10’-2” (3098)	12’-0” (3657)	15’-8” (4775)	19’-2”(5842)	22’-7”(6884)
72” (1829)	**	5’-9”(1753)	8’-0” (2438)	10’-0” (3048)	11’-10”(3606)	15’-6” (4724)	19’-1” (5816)	22’-6” (6858)
80” (2032)	**	5’-0”(1524)	7’-5”(2260)	9’-6” (2895)	11’-6” (3505)	15’-3” (4648)	18’-10”(5740)	22’-4” (6808)
88” (2235)		**	6’-9”(2058)	9’-0” (2743)	11’-1” (3378)	14’-11”(4546)	18’-7” (5664)	22’-1” (6731)
96” (2438)		**	6’-0”(1829)	8’-5” (2565)	10’-8”(3251)	14’-7” (4445)	18’-4” (5588)	21’-11”(6680)
104” (2642)			**	7’-9” (2362)	10’-1”(3073)	14’-2” (4318)	18’-0” (5486)	21’-8” (6604)
112” (2845)			**	7’-0” (2134)	9’-6”(2895)	13’-9” (4191)	17’-8” (5385)	21’-4” (6503)
120” (3048)				**	8’-9”(2667)	13’-4”(4064)	17’-3” (5258)	21’-1” (6426)

**** INTERPOLATION BELOW THE MINIMUM VALUES SHOWN IS NOT ALLOWED.**

1) SEE TABLE 2.7-4 FOR MINIMUM JOIST SPACE FOR DIAGONAL ONLY BRIDGING.
2) In the shaded range of the Table, for LH23, 24,and 25, compressive strength requirements may control, reducing the maximum joist spacing shown. Either select a larger bridging angle size (outside of the shaded area) or check compression strength (Ref. Section 2.7(c)) for LH23, 24, and 25.

BRIDGING

MAXIMUM JOIST SPACING FOR HORIZONTAL BRIDGING SPANS OVER 60 ft. (18.3 m) REQUIRE BOLTED DIAGONAL BRIDGING							
JOIST SECTION NUMBER[1]	Nominal Unfactored Force P_{br} lbs (N)	BRIDGING MATERIAL SIZE[2] Equal Leg Angles					
		1 x 7/64 (25 x 3 mm) r = 0.20" (5.08 mm)	1-1/4 x 7/64 (32 x 3 mm) r = 0.25" (6.35 mm)	1-1/2 x 7/64 (38 x 3 mm) r = 0.30" (7.62 mm)	1-3/4 x 7/64 (45 x 3 mm) r = 0.35" (8.89 mm)	2 x 1/8 (52 x 3 mm) r = 0.40" (10.16 mm)	2-1/2 x 5/32 (64 x 4 mm) r = 0.50" (12.70 mm)
		ft.-in. (mm)	ft.-in. (mm)	ft.-in. (mm)	ft.-in. (mm)	ft.-in. (mm)	ft.-in. (mm)
K1 – 8	340 (1512)	5'-0" (1524)	6'–3" (1905)	7'–6" (2286)	8'-9" (2667)	10'–0" (3048)	12'–6" (3810)
K9-10, LH02-03	450 (2002)	4'-4" (1321)	6'-1" (1854)	7'–6" (2286)	8'–9" (2667)	10'–0" (3048)	12'–6" (3810)
K11-12, LH04-05	560 (2491)	3'–11"(1194)	5'–6" (1676)	7'–4" (2235)	8'–9" (2667)	10'–0" (3048)	12'–6" (3810)
LH06-08	750 (3336)		4'–9" (1448)	6'–3" (1905)	7'–11" (2413)	10'–0" (3048)	12'–6" (3810)
LH09	850 (3781)		4'–5" (1346)	5'–10" (1778)	7'–5" (2261)	9'–9" (2972)	12'–6" (3810)
LH/DLH10	900 (4003)		4'–4" (1321)	5'–8" (1727)	7'–3" (2210)	9'–5" (2870)	12'–6" (3810)
LH/DLH11	950 (4226)		4'–2" (1270)	5'–7" (1702)	7'–0" (2134)	9'–2" (2794)	12'–6" (3810)
LH/DLH12	1100 (4893)		3'-11" (1194)	5'–2" (1575)	6'–8" (2032)	8'–6" (2591)	12'-6" (3810)
LH/DLH13	1200 (5338)		3'-9" (1143)	4'–11" (1499)	6'–3" (1905)	8'-2" (2489)	12-6" (3810)
LH/DLH14	1300 (5783)			4'-9" (1448)	6'-0" (1829)	7'-10" (2388)	12'-4" (3759)
LH/DLH15	1450 (6450)			4'-6" (1372)	5'-8" (1727)	7'-5" (2261)	11'-8" (3556)
LH/DLH16–17	1850 (8229)			4'-0" (1219)	5'-0" (1524)	6'-7"(2007)	10'-4" (3150)
LH/DLH18–20	2350 (10453)			3'-7" (1067)	4'-4" (1321)	5'-10" (1778)	9'-1" (2769)
LH/DLH21–22	3150 (14012)				3'-10" (1168)	5'-0" (1524)	7'-11" (2413)
LH/DLH23–24	4130 (18371)				3'-4" (1016)	4'-5" (1346)	6'-11" (2108)
LH/DLH25	4770 (21218)					4'-1"(1245)	6'-5" (1956)

(1) Refer to last two digit(s) of Joist Designation
(2) Connection to joist shall resist force listed in the Steel Joist Institute Standard Specifications Table 5.5-2

Bridging Bolt Sizes

Angle Size	Bolt Size	Slot Size	Bolt Grade
1.25x1.25	3/8"	7/16"x1"	A307
1.5x1.5	3/8"	7/16"x1"	A307
	1/2"	9/16"x1"	
2x2	3/8"	7/16"x1"	A307
	1/2"	9/16"x1"	
	5/8"	11/16"x1-1/2"	
	3/4"	13/16"x1-1/2"	A325
2.5x2.5	3/8"	7/16"x1"	A307
	1/2"	9/16"x1"	
	5/8"	11/16"x1-1/2"	
	3/4"	13/16"x1-1/2"	A325
3x3	1/2"	9/16"x1"	A307
	5/8"	11/16"x1-1/2"	
	3/4"	13/16"x1-1/2"	A325
3.5x3.5	1/2"	9/16"x1"	A307
	5/8"	11/16"x1-1/2"	
	3/4"	13/16"x1-1/2"	A325
4x4	1/2"	9/16"x1"	A307
	5/8"	11/16"x1-1/2"	
	3/4"	13/16"x1-1/2"	A325

BRIDGING DETAILS

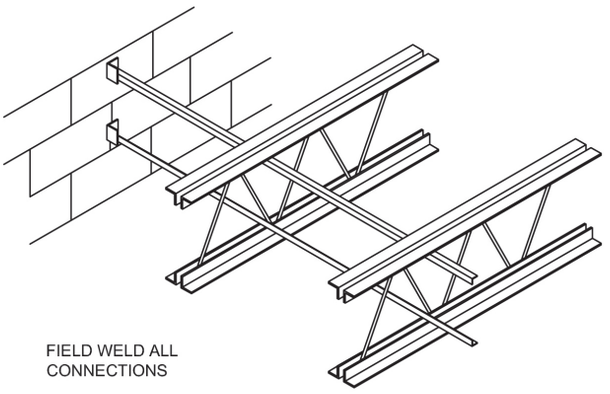

FIELD WELD ALL CONNECTIONS

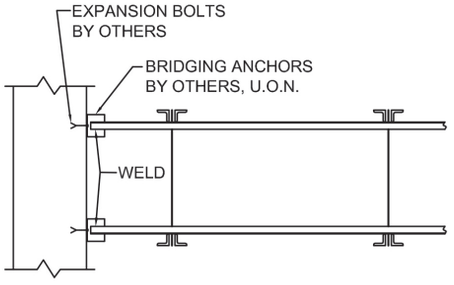

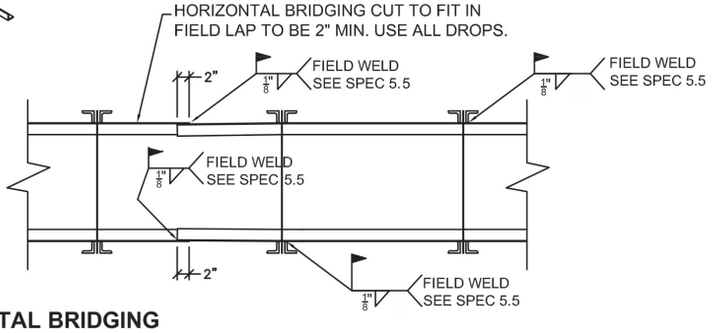

HORIZONTAL BRIDGING
SEE SJI SPECIFICATIONS

NOTE: DO NOT WELD BRIDGING TO JOIST WEB MEMBERS. DO NOT HANG ANY MECHANICAL, ELECTRICAL, ETC. FROM BRIDGING.

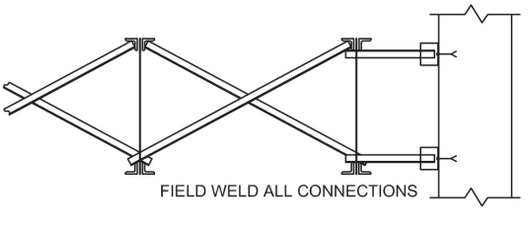

WELDED CROSS BRIDGING

HORIZONTAL BRIDGING SHALL BE USED IN SPACE ADJACENT TO THE WALL TO ALLOW FOR PROPER DEFLECTION OF THE JOIST NEAREST WALL.

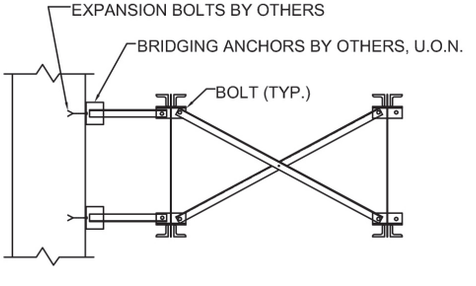

BOLTED CROSS BRIDGING

(a) HORIZONTAL BRIDGING UNITS SHALL BE USED IN THE SPACE ADJACENT TO THE WALL TO ALLOW FOR PROPER DEFLECTION OF THE JOIST NEAREST THE WALL.

(b) FOR REQUIRED BOLT SIZE REFER TO BRIDGING TABLE. NOTE: CLIP CONFIGURATION MAY VARY FROM THAT SHOWN.

SLOPED SEAT REQUIREMENTS FOR SLOPES 3/8":12 AND GREATER
K-SERIES OPEN WEB STEEL JOISTS
(VARIES FROM SJI CODE OF STANDARD PRACTICE)

LOW END W/OUT TOP CHORD EXTENSIONS

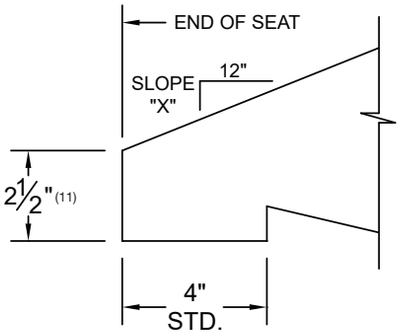

HIGH END W/OUT TOP CHORD EXTENSIONS

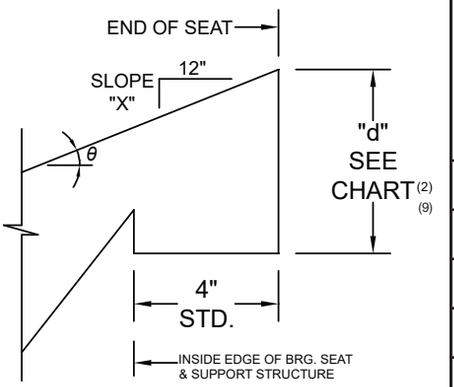

LOW END W/ TOP CHORD EXTENSIONS

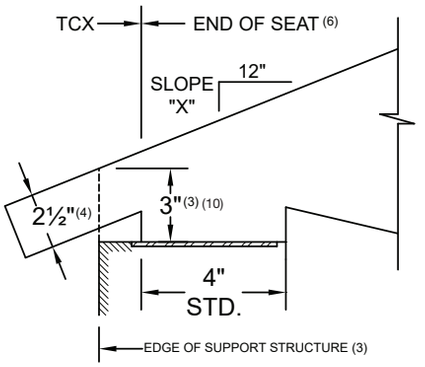

HIGH END W/ TOP CHORD EXTENSIONS

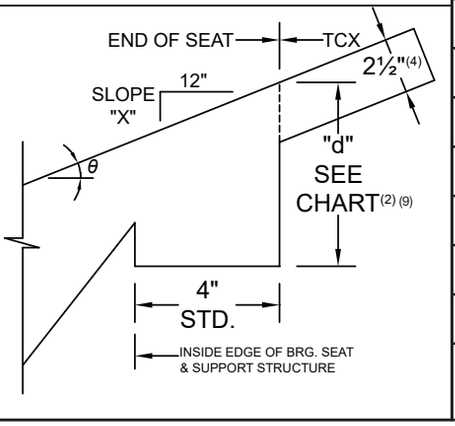

SLOPE "X":12	MINIMUM HIGH END SEAT DEPTH "d"	
	SJI STANDARD	VULCRAFT RECOMMENDED FOR SPECIAL CONDITIONS (8)
3/8	3 1/2	5"
1/2	3 1/2	5"
1	3 1/2	5"
1 1/2	4	5 1/2"
2	4	5 1/2"
2 1/2	4	5 1/2"
3	4 1/2	6"
3 1/2	4 1/2	6"
4	4 1/2	6"
4 1/2	5	6 1/2"
5	5	6 1/2"
5 1/2	5 1/2	7"
6	5 1/2	7"
> 6:12	SEE NOTE (2)	SEE NOTE (9)

Notes:
1. Depths shown are the minimum required for manufacturing of sloped seats. Depths may vary depending on actual bearing conditions.
2. d = 1/2 + 2.5/cosθ + 4tanθ (Rounded up to the nearest 1/2")
3. Clearance must be checked on outer edge of support. Increase bearing depths as required to allow passage of 2 1/2" deep extension.
4. If extension depth greater than 2 1/2" is required, increase bearing depths accordingly.
5. If slope is 1/4:12 or less, sloped seats are not required.
6. Required bearing seat depth is determined at END OF SEAT.
7. Also, refer to SJI Specification 5.4 for special considerations of joist end reaction location.
8. For extensions greater than 1'-6" or when net uplift reactions exceed the values listed on page 14.
9. d = 2 + 2.5/cosθ + 4tanθ (Rounded up to the nearest 1/2")
10. 4 1/2" for special conditions per Note 8
11. 3" for special conditions per Note 8

SLOPED SEAT REQUIREMENTS FOR SLOPES 3/8":12 AND GREATER
LH- AND DLH-SERIES OPEN WEB STEEL JOISTS
(VARIES FROM SJI CODE OF STANDARD PRACTICE)

LOW END W/OUT TOP CHORD EXTENSIONS

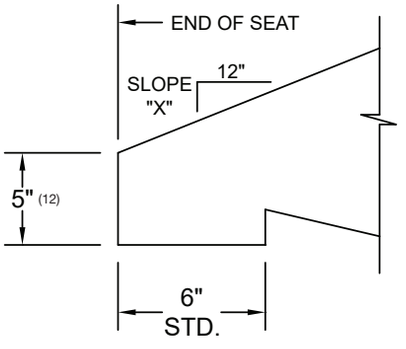

HIGH END W/OUT TOP CHORD EXTENSIONS

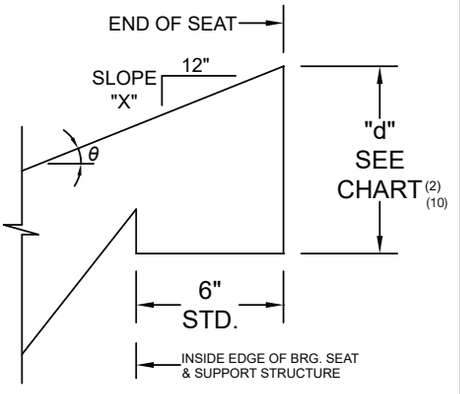

LOW END W/ TOP CHORD EXTENSIONS

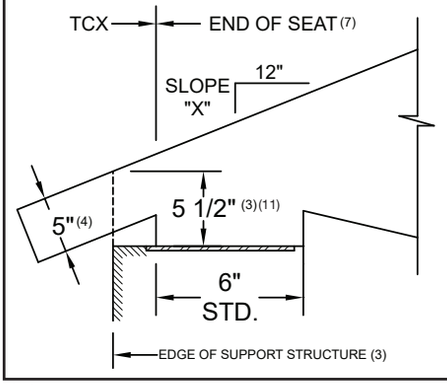

HIGH END W/ TOP CHORD EXTENSIONS

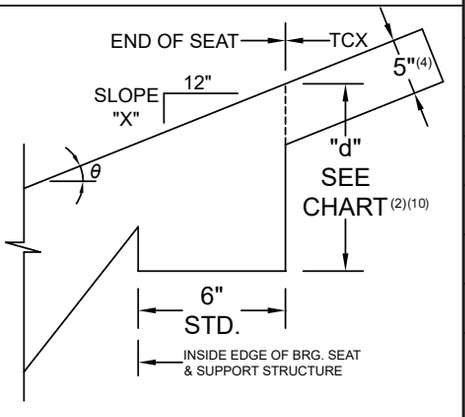

SLOPE "X":12	MINIMUM HIGH END SEAT DEPTH "d"	
	SJI STANDARD	VULCRAFT RECOMMENDED FOR SPECIAL CONDITIONS (9)
3/8	6	7 1/2"
1/2	6	7 1/2"
1	6 1/2	8"
1 1/2	6 1/2	8"
2	7	8 1/2"
2 1/2	7	8 1/2"
3	7 1/2	9"
3 1/2	7 1/2	9"
4	8	9 1/2"
4 1/2	8 1/2	10"
5	8 1/2	10"
5 1/2	9	10 1/2"
6	9 1/2	11"
> 6:12	SEE NOTE (2)	SEE NOTE (10)

Notes:
1. Depths shown are the minimum required for manufacturing of sloped seats. Depths may vary depending on actual bearing conditions.
2. $d = 1/2 + 5/\cos\theta + 6\tan\theta$ (Rounded up to the nearest 1/2")
3. Clearance must be checked on outer edge of support. Increase bearing depths as required to allow passage of 5" deep extension.
4. If extension depth greater than 5" is required, increase bearing depths accordingly.
5. Add 2 1/2" to seat depth at 18 thru 25 chord section numbers. Consult with Vulcraft for information when TCXs are present.
6. If slope is 1/4:12 or less, sloped seats are not required.
7. Required bearing seat depth is determined at END OF SEAT.
8. Also, refer to SJI Specification 5.4 for special considerations of joist end reaction location.
9. For extensions greater than 2'-6".
10. $d = 2 + 5/\cos\theta + 6\tan\theta$ (Rounded up to the nearest 1/2")
11. 7" for special conditions per Note 9
12. 6" for special conditions per Note 9

ALLOWABLE DUCTWORK

Joist Depth (in.)	Panel Length (in.)	Round (in.)	Square (in.)	Rectangular (in. x in).
10	19*	5	4	3x6
12	19*	6	5	4x7
14	19*	7	6	5x7
16	19*	8	6	6x7
18	24*	9	7	6x9
20	24*	10	8	7x9
22	24*	10	9	8x9
24	24*	11	9	9x9
18	48	10	8	6x18
20	48	10	8	7x18
22	48	10	9	8x18
24	48	12	10	8x19
26	48	15	12	9x19
28	48	16	13	10x18
30	48	17	14	11x19
32	64	20	16	11x25
34	68	22	18	12x28
36	72	24	18	13x29
38	76	25	20	13x30
40	80	26	22	14x32
42	84	27	22	16x34
44	88	28	23	17x36
46	92	30	24	18x36
48	96	32	26	19x40
50	100	33	27	20x42

* rod joist

Vierendeel Openings

Design Considerations:

1. As a “general rule of thumb” vierendeel openings can be fabricated with a horizontal width up to 2 times the depth of the steel joist.

2. It is desirable, to locate the vierendeel opening near the mid-span of the steel joist. Doing so reduces the required chord bending moments from transferring the vertical shear forces across the vierendeel opening with no diagonal web members. This decreases the penalty to the top and bottom chord size for the opening.

3. One critical load case is live loading on only half the joist span.

4. It is desirable to avoid multiple vierendeel openings within a joist. Where multiple vierendeel openings are required, the minimum distance between vierendeel openings shall be no less than two times the joist depth.

5. When determining the net available opening dimensions, consideration must be given to fire proofing thicknesses (where it occurs).

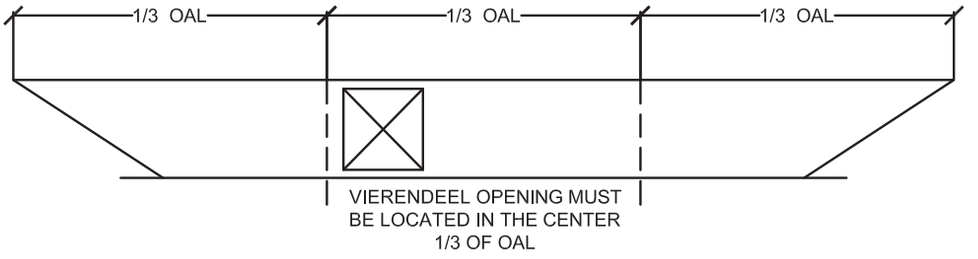

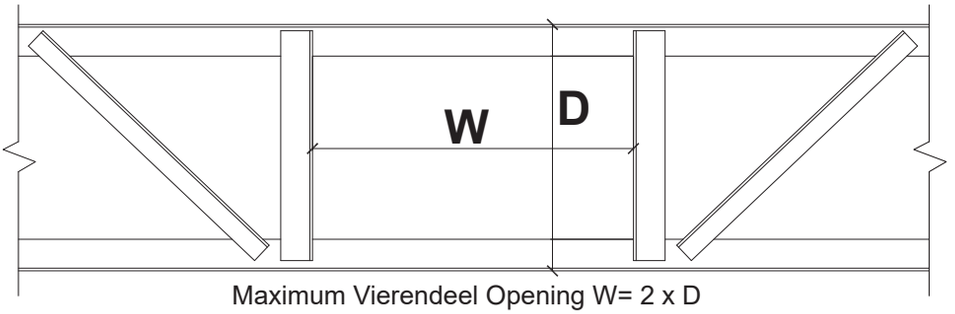

Maximum Vierendeel Opening W= 2 x D

Specification

- Call out locations of openings on structural framing plans.
- In addition to width of opening, call out required height of opening so joist chords or joist depth can be adjusted accordingly.

BOTTOM BEARING DETAILS

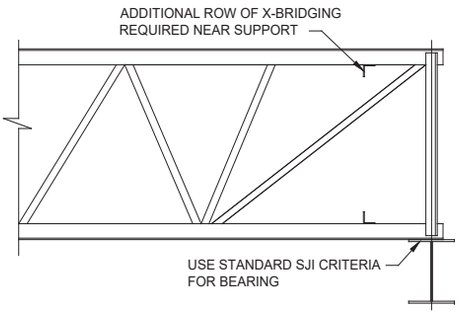

SQUARE ENDED, BOTTOM BEARING

Whenever joists are bottom chord bearing, diagonal cross bridging must be installed from joist to joist at or near the bearing location to provide additional lateral erection stability.

Note: Joist configuration and member size may vary.

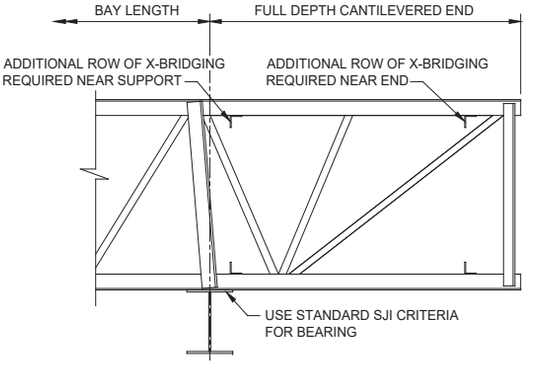

CANTILEVERED, BOTTOM BEARING, SQUARE END

The weight of walls, signage, fascia, etc. supported at the end of a cantilever square end must be shown on the contract drawings to be properly considered in the joist design.

Note: Joist configuration and member size may vary.

Composite Joists (CJ-Series)

It is possible to use joists in floor systems which are designed to act compositely with the floor slab. The employment of composite behavior has all the advantages of composite construction using wide flange members plus the advantages of joist construction.

The advantages of joist construction are:

1. Simplified fabrication and erection due to end bearing seats
2. Lighter overall structure weight
3. Open webs for mechanicals

Additional advantages when using composite joist construction:

1. Shallower depth joists, which allow shorter story heights
2. Lighter joists due to reduced top chord size
3. Fewer pieces due to wider spacing of joists with thicker slabs
4. Longer spans than comparable depth non-composite construction

The decision as to whether or not to use composite joists should include consideration of:

1. The potential for dead load deflection of the un-shored non-composite section
2. Floor vibration considerations
3. The added cost of the shear connectors required for composite action

Because the use of composite joists requires custom design of composite joists, it is important for the specifying professional to contact Vulcraft during the planning stages to establish the design limitations appropriate to the efficient use of composite joists. It will be necessary for the designer and Vulcraft to develop a proper means for specifying the composite joists for subsequent design and fabrication. The SJI "Standard Specification Composite Steel Joists Catalog" (SJI, 2019) contains a section on the "Responsibility of the specifying professional." Since Vulcraft is designing the CJ-Series joists, communication between the specifying professional and Vulcraft is extremely important. To do this, basic design information must be provided to Vulcraft. The following list summarizes the needed information:

1. Joist Depth
2. Joist Span
3. Adjacent Member Spacing
4. Type of Floor Deck
5. Concrete Unit Weight
6. Concrete Compressive Strength
7. Slab Thickness above Floor Deck
8. Composite Design Loads
   a) Noncomposite DL
   b) Construction LL
   c) Composite LL
   d) Composite DL
9. Camber

A "Composite Joist Floor Design Parameters Checklist" can be found in the "Code of Standard Practice for Composite Steel Joists." A form for filling in the above information is provided.

Prior to contacting Vulcraft the specifying professional is encouraged to conduct a preliminary design for the composite joists. This can be accomplished by running the "Composite Joist Floor System Aid" at https://vulcraft.com/DesignTools. The tool can provide excellent information as to the least weight and most cost effective floor system by iterating several parameters such as joist depth, joist spacing, bay size and spans, etc.

Economic Open Web Steel Joist and Joist Girder Systems

When investigating the most economical Open Web Steel Joist and Joist Girder system, there are many factors that will affect the decision. What follows are several items to consider when making your final decision for the system:

- Like most manufactured products, there is significant advantage to repetition in the manufacture of Open Web Steel Joists and Joist Girders. Repetition not only aids Vulcraft as the manufacturer, it is also a benefit to the steel erector during installation.
- In general, use the deepest system allowed by the available headroom and clearance. On a given span the deeper joists and Joist Girders will be lighter and less expensive. However, a lighter joist may require additional field installed bridging. Also, specifying a deeper LH-Series joist where a K-Series joist would work may not be the best solution due to Vulcraft's efficiency in the manufacture of the K-Series joist.
- Use wider joist spacings. A good solution is to maximize the joist spacing keeping in mind the limitations of the deck such as Factory Mutual. This often results in one less joist per bay for erection and the added reduction of bridging installation.
- It is better to increase the load carrying capacity of the joists during initial construction than to have to reinforce the joists for future loading due to the change in use of the structure or future building maintenance.
- The use of uniform load per foot design (see page 12) can be more economical than the use of SJI standard designations since the joist will be designed for the actual loads indicated by the specifying professional.
- Special joists designed for concentrated loads or other non-uniform loading is likely more economical than double joists or KCS-Series joist.
- It is more economical to provide K-Series joists with 5" bearing seats than to specify LH-series joists just to get the required 5" bearing depth.
- Provide locations of concentrated loads when known. The use of Add-Loads (as defined in the SJI Code of Standard Practice) will provide a joist designed for a concentrated load located at any panel point, and will design both the chord and web members for the worst-case load which may be conservative and result in larger joists than when locations are given.
- Limit the size of welded connections to steel joists. Many components of Open Web Steel Joists have thicknesses less than or equal to 1/8". It is better to increase the weld length than to increase the thickness of the joist members to meet weld requirements.
- When using load diagrams avoid showing web members. The design will be most economical when Vulcraft is free to determine the joist geometry.
- Top Chord extensions are designed for the same uniform load as the joist. When using SJI standard joists at minimum spans the uniform load nears 550 plf which may be conservative for the joist. Designing a long extension for this load may result in an extension that requires additional bearing depth and result in a significantly larger chord member. When dealing with this situation it is more economical to specify the actual loads on the extension or specify either an "S" or "R" type extension (see SJI Load Tables on page 168).
- Specifying joists that require only horizontal bridging will generally be less expensive than joists that require bolted cross bridging. Note however that joists beyond certain spans will always require bolted cross bridging.
- In general, it is more economical to span joists in the long direction and Joist Girders in the short direction for rectangular bays.

Combined K, LH and DLH Series Economic Tables

The following table is an economy guide with the joists listed in sequence of increasing relative cost. The most economical joist for a given span is listed first along with its load carrying capacity and bridging requirements. The economies are based on production cost with a relative cost differential for the installation of horizontal bridging versus bolted cross bridging.

The figures shown in **Red** are the uniform load, in pounds per lineal foot, which will produce an approximate deflection of L/360 (where L is the span). If a deflection of L/240 is desired, simply multiply the figure in red by 1.5. In no case shall the total load capacity of the joist be exceeded.

To use this guide the specifying professional simply turns to the required span and scans down the load column (either ASD or LRFD) until the first joist that will support the required load is found. This will then be the most economical joist for the combination of span and load carrying capacity. The table then lists the approximate weight per foot of the joist and the load which will result in a deflection of L/360 for the given joist. If instead the joist is governed by the serviceability condition of L/360, simply scan down the deflection load column until the first joist that meets the deflection load is found. As before, this will then be the most economical joist to meet the serviceability requirement.

Example: Given 40’-0” span and a required load of 300 plf (ASD). Turn to the 40’ span, it is found that a 30K7 at 40’-0” will carry 310 plf total load.

Note that this table has been shaded to match the load tables. The shading indicates when bolted cross bridging needs to be installed per the Steel Joist Institute Specification.

Where the joist is shaded **Green** the row of bridging nearest the mid-span shall be diagonal bridging with bolted connections at the chords and intersection. Hoisting cables shall not be released until this row of bolted diagonal bridging is completely installed.

Where the joist is shaded **Blue**, all rows of bridging shall be diagonal bridging with bolted connections at the chords and intersection. Hoisting cables shall not be released until the two rows nearest the third points are completely installed. The **Blue** shaded area starts after 60’-0” and extends up through 100’-0”.

Where the joist is shaded **Gray,** all rows of bridging shall be diagonal bridging with bolted connections at chords and intersection. Hoisting cables shall not be released until all rows of bridging are completely installed. The **Gray** shaded area starts after 100’-0” and extends up through 240’-0”

The bridging column is included to aid the user in determination of the number of bridging rows required for horizontal bridging (H), bolted cross bridging (X) and bolted erection stability bridging (EX).

ECONOMICAL JOIST GUIDE

JOIST DESIG.	TOTAL LOAD (ASD)	LOAD for L/360 DEFL.	TOTAL LOAD (LRFD)	JOIST WEIGHT (lbs/ft)	MAX CHORD WIDTH (IN)	BRIDG. (H/X/EX)
10' LENGTH						
10K1	550	550	825	5.1	4	1/0/0
11' LENGTH						
10K1	550	542	825	5.1	4	1/0/0
12' LENGTH						
12K1	550	550	825	5.3	4	1/0/0
13' LENGTH						
12K1	550	510	825	5.4	4	1/0/0
14' LENGTH						
10K1	412	289	618	5.1	4	1/0/0
12K3	550	463	825	5.7	4	1/0/0
15' LENGTH						
10K1	358	234	537	5.1	4	1/0/0
14K3	550	507	825	5.8	4	1/0/0
16' LENGTH						
10K1	313	192	470	5.1	4	1/0/0
12K1	381	282	572	5.3	4	1/0/0
12K3	476	351	714	6	4	1/0/0
16K2	550	550	825	6.5	4	1/0/0
17' LENGTH						
10K1	277	159	416	5	4	1/0/0
14K1	396	324	594	5.4	4	1/0/0
14K3	496	404	744	6.3	4	1/0/0
16K2	512	488	768	6.8	4	1/0/0
12K5	550	366	825	7.5	5	1/0/0
18' LENGTH						
12K3	374	245	561	5.6	4	1/0/0
16K2	456	409	684	6.1	4	1/0/0
16K3	508	456	762	6.7	4	1/0/0
18K3	550	550	825	6.9	4	1/0/0
18LH02	805	805	1208	9.9	5	1/0/0
18LH04	1039	1039	1559	11.9	5	1/0/0
18LH05	1175	1175	1763	13.2	5	1/0/0
18LH06	1438	1438	2157	15.3	6	1/0/0
18LH07	1529	1529	2294	16.6	6	1/0/0
18LH08	1728	1728	2592	17.9	6	1/0/0
18LH09	1989	1889	2984	19.8	7	1/0/0
18LH10	2231	2231	3347	21.5	7	1/0/0
18LH11	2489	2489	3734	23.9	7	1/0/0
18LH12	2751	2751	4127	29.1	8	1/0/0
19' LENGTH						
12K1	268	167	402	5.1	4	2/0/0
14K1	315	230	473	5.4	4	2/0/0
14K3	395	287	593	6	4	2/0/0

JOIST DESIG.	TOTAL LOAD (ASD)	LOAD for L/360 DEFL.	TOTAL LOAD (LRFD)	JOIST WEIGHT (lbs/ft)	MAX CHORD WIDTH (IN)	BRIDG. (H/X/EX)
19' LENGTH (continued)						
16K5	550	455	825	7.7	5	1/0/0
18LH02	748	748	1122	9.7	5	1/0/0
18LH03	833	833	1250	10.5	5	1/0/0
18LH05	1093	1093	1640	12.9	5	1/0/0
18LH06	1329	1329	1994	15.2	6	1/0/0
18LH07	1414	1414	2121	16.3	6	1/0/0
18LH08	1598	1500	2397	18.1	6	1/0/0
18LH09	1831	1601	2747	20.1	7	1/0/0
18LH10	2054	2054	3081	21.9	7	1/0/0
18LH11	2291	2291	3437	26	7	1/0/0
18LH12	2533	2533	3800	28.5	8	1/0/0
20' LENGTH						
12K1	241	142	362	5.1	4	2/0/0
14K1	284	197	426	5.3	4	2/0/0
12K3	302	177	453	5.6	4	2/0/0
16K4	493	386	740	7.4	5	1/0/0
18K4	550	490	825	8	5	1/0/0
18LH02	697	696	1046	9.7	5	1/0/0
20LH02	712	680	1068	9.1	5	1/0/0
18LH04	899	896	1349	11.8	5	1/0/0
18LH05	1018	1009	1527	13	5	1/0/0
20LH05	1060	1020	1590	12.6	5	1/0/0
20LH06	1226	1226	1839	14.4	6	1/0/0
18LH07	1310	1229	1965	16.2	6	1/0/0
20LH07	1427	1427	2141	16.6	6	1/0/0
20LH08	1550	1487	2325	17.9	6	1/0/0
18LH09	1688	1369	2532	19.8	7	1/0/0
20LH09	1771	1620	2657	19.6	7	1/0/0
20LH10	1912	1747	2868	21	7	1/0/0
18LH11	2114	2005	3171	25.8	7	1/0/0
20LH11	2311	2311	3467	26	7	1/0/0
18LH12	2337	2226	3506	28.5	8	1/0/0
20LH12	2555	2555	3833	28.8	8	1/0/0
18LH13	2805	2576	4208	32	8	1/0/0
21' LENGTH						
12K1	218	123	327	5.1	4	2/0/0
16K2	333	255	500	5.9	4	1/0/0
16K3	371	285	557	6.2	4	2/0/0
18K3	420	364	630	6.9	4	2/0/0
16K4	447	333	671	7.4	5	2/0/0
18K7	550	460	825	8.2	5	1/0/0
18LH02	649	600	974	9.6	5	2/0/0
18LH04	838	772	1257	11.8	5	1/0/0

JOIST DESIG.	TOTAL LOAD (ASD)	LOAD for L/360 DEFL.	TOTAL LOAD (LRFD)	JOIST WEIGHT (lbs/ft)	MAX CHORD WIDTH (IN)	BRIDG. (H/X/EX)
21' LENGTH (continued)						
18LH05	949	870	1424	12.9	5	1/0/0
20LH05	990	879	1485	12.5	5	1/0/0
20LH06	1146	1146	1719	14.2	6	1/0/0
20LH07	1327	1239	1991	16.4	6	1/0/0
18LH08	1373	1105	2060	17.7	6	1/0/0
20LH08	1442	1282	2163	17.5	6	1/0/0
18LH09	1562	1180	2343	19.5	7	1/0/0
18LH10	1752	1565	2628	21.7	7	1/0/0
18LH11	1955	1728	2933	25.4	7	1/0/0
20LH11	2141	2141	3212	26.1	7	1/0/0
20LH12	2367	2367	3551	28.5	8	1/0/0
18LH13	2587	2220	3881	31.7	8	1/0/0
20LH13	2847	2798	4271	32.1	8	1/0/0
22' LENGTH						
12K1	199	106	299	5.2	4	2/0/0
14K1	234	147	351	5.3	4	2/0/0
14K3	293	184	440	5.7	4	2/0/0
16K3	337	247	506	6.1	4	2/0/0
18K3	382	316	573	6.5	4	2/0/0
16K4	406	289	609	7.4	5	2/0/0
16K5	458	323	687	8.1	5	2/0/0
18K9	550	438	825	8	5	1/0/0
18LH03	675	579	1013	10.5	5	2/0/0
20LH03	715	560	1073	10.6	5	2/0/0
18LH05	886	755	1329	13.3	5	1/0/0
20LH06	1071	1007	1607	14.1	6	1/0/0
18LH07	1130	919	1695	16	6	1/0/0
20LH07	1236	1076	1854	16.1	6	1/0/0
20LH09	1524	1212	2286	19.5	7	1/0/0
18LH10	1624	1358	2436	21.4	7	1/0/0
20LH10	1645	1307	2468	21	7	1/0/0
20LH11	1988	1885	2982	25.4	7	1/0/0
18LH12	2003	1664	3005	28.9	8	1/0/0
18LH13	2391	1926	3587	31.4	8	1/0/0
20LH13	2636	2428	3954	31.7	8	1/0/0
20LH14	2879	2640	4319	37.2	8	1/0/0
23' LENGTH						
14K1	214	128	321	5.4	4	2/0/0
14K3	268	160	402	5.7	4	2/0/0
18K3	349	276	524	6.5	4	2/0/0
16K4	371	252	557	6.9	4	2/0/0
20K3	389	344	584	7	5	2/0/0
16K5	418	282	627	8	5	2/0/0

JOIST DESIG.	TOTAL LOAD (ASD)	LOAD for L/360 DEFL.	TOTAL LOAD (LRFD)	JOIST WEIGHT (lbs/ft)	MAX CHORD WIDTH (IN)	BRIDG. (H/X/EX)
23' LENGTH (continued)						
20K7	550	468	825	8.2	5	1/0/0
18LH02	567	454	851	9.5	5	2/0/0
20LH02	587	444	881	9.4	5	2/0/0
20LH03	670	489	1005	10.2	5	2/0/0
18LH04	732	585	1098	11.9	5	2/0/0
18LH05	829	659	1244	13.5	5	2/0/0
20LH05	865	666	1298	13	5	2/0/0
18LH06	990	764	1485	15.4	6	1/0/0
18LH07	1053	803	1580	16.3	6	1/0/0
20LH07	1154	939	1731	16.4	6	1/0/0
20LH09	1418	1058	2127	19.4	7	1/0/0
18LH10	1508	1186	2262	21.4	7	1/0/0
20LH10	1530	1141	2295	20.9	7	1/0/0
18LH11	1683	1310	2525	25.6	7	1/0/0
18LH12	1860	1454	2790	28.4	8	1/0/0
20LH12	2045	1828	3068	28.9	8	1/0/0
18LH13	2216	1683	3324	31.3	8	1/0/0
18LH14	2420	1829	3630	37.1	8	1/0/0
20LH14	2672	2306	4008	36.8	8	1/0/0
20LH15	2895	2507	4343	40	9	1/0/0
24' LENGTH						
12K3	208	101	312	5.6	4	2/0/0
16K3	283	189	425	5.9	4	2/0/0
18K3	320	242	480	6.5	4	2/0/0
16K4	340	221	510	7	4	2/0/0
18K4	385	284	578	7.6	5	2/0/0
22K11	550	495	825	8.2	11	1/0/0
18LH03	591	444	887	10.5	5	2/0/0
20LH03	629	430	944	10	5	2/0/0
20LH04	700	546	1050	11	5	2/0/0
24LH05	827	827	1241	11.5	5	2/0/0
20LH06	942	773	1413	14.3	5	1/0/0
24LH07	1214	1214	1821	15.9	6	1/0/0
24LH08	1287	1287	1931	17.2	6	1/0/0
20LH09	1322	930	1983	19.6	7	1/0/0
20LH10	1426	1003	2139	21.2	7	1/0/0
24LH10	1784	1716	2676	22.5	7	1/0/0
24LH11	1948	1796	2922	25	7	1/0/0
24LH12	2235	2235	3353	27.7	8	1/0/0
20LH13	2276	1863	3414	31.9	8	1/0/0
24LH13	2688	2688	4032	33.2	8	1/0/0
24LH14	2936	2936	4404	36.9	8	1/0/0

ECONOMICAL JOIST GUIDE

JOIST DESIG.	TOTAL LOAD (ASD)	LOAD for L/360 DEFL.	TOTAL LOAD (LRFD)	JOIST WEIGHT (lbs/ft)	MAX CHORD WIDTH (IN)	BRIDG. (H/X/EX)
25' LENGTH						
14K1	180	100	270	5.3	4	2/0/0
16K2	234	150	351	5.7	4	2/0/0
18K3	295	214	443	6.5	4	2/0/0
16K4	313	195	470	6.8	4	2/0/0
20K3	329	266	494	6.9	5	2/0/0
16K5	353	219	530	7.8	5	2/0/0
20K4	396	312	594	7.6	5	2/0/0
20K5	447	350	671	8.1	5	2/0/0
20K7	542	421	813	8.7	5	2/0/0
18LH03	554	392	831	10.5	5	2/0/0
20LH04	658	482	987	11.2	5	2/0/0
24LH05	779	779	1169	11.3	5	2/0/0
20LH06	886	683	1329	14.5	6	1/0/0
24LH06	981	981	1472	14.4	5	1/0/0
24LH07	1140	1140	1710	16.1	6	1/0/0
24LH08	1208	1208	1812	17.3	6	1/0/0
20LH09	1234	821	1851	20	7	1/0/0
20LH10	1332	886	1998	21.3	7	1/0/0
24LH10	1670	1515	2505	22.2	7	1/0/0
24LH11	1824	1587	2736	24.8	7	1/0/0
24LH12	2093	2093	3140	27.2	7	1/0/0
20LH13	2121	1646	3182	31.6	8	1/0/0
24LH13	2511	2445	3767	32.4	8	1/0/0
24LH14	2743	2660	4115	36.2	8	1/0/0
24LH15	2972	2893	4458	40.5	9	1/0/0
26' LENGTH						
14K1	166	83	249	5.4	4	2/0/0
16K2	216	133	324	5.7	4	2/0/0
16K3	240	148	360	5.9	4	2/0/0
18K3	272	190	408	6.2	4	2/0/0
16K4	289	173	434	6.9	4	2/0/0
18K4	328	222	492	7.2	4	2/0/0
26K5	542	535	813	8.4	5	1/0/0
24LH03	590	530	885	9.8	5	2/0/0
18LH04	604	403	906	11.9	5	2/0/0
24LH04	642	642	963	10.5	5	2/0/0
18LH05	684	454	1026	13.1	5	2/0/0
20LH06	822	606	1233	14.3	5	1/0/0
24LH06	925	925	1388	14.3	5	1/0/0
24LH07	1072	1020	1608	15.7	6	1/0/0
24LH08	1136	1083	1704	17	6	1/0/0
18LH10	1223	817	1835	22	7	1/0/0
24LH09	1458	1268	2187	20.5	7	1/0/0

JOIST DESIG.	TOTAL LOAD (ASD)	LOAD for L/360 DEFL.	TOTAL LOAD (LRFD)	JOIST WEIGHT (lbs/ft)	MAX CHORD WIDTH (IN)	BRIDG. (H/X/EX)
26' LENGTH (continued)						
24LH10	1565	1345	2348	22	7	1/0/0
24LH11	1710	1408	2565	24.6	7	1/0/0
24LH12	1962	1864	2943	28	7	1/0/0
24LH13	2350	2171	3525	31.9	8	1/0/0
24LH14	2567	2361	3851	36.1	8	1/0/0
20LH16	2691	1902	4037	43	9	1/0/0
18LH17	2725	1712	4088	48.6	9	1/0/0
27' LENGTH						
16K2	200	119	300	5.7	4	2/0/0
16K4	268	155	402	6.8	4	2/0/0
20K3	281	211	422	6.8	5	3/0/0
18K5	342	222	513	7.9	5	2/0/0
22K5	422	337	633	8.1	5	2/0/0
20K7	463	333	695	8.6	5	2/0/0
24K7	550	478	825	9	5	2/0/0
24LH04	606	580	909	10.7	5	2/0/0
18LH05	648	414	972	13.2	5	2/0/0
24LH05	694	620	1041	11.9	5	2/0/0
24LH06	874	827	1311	14.6	6	2/0/0
24LH07	1009	910	1514	15.5	6	2/0/0
20LH10	1028	724	1542	18.1	6	1/0/0
18LH10	1145	728	1718	21.9	7	1/0/0
24LH10	1469	1199	2204	21.7	7	1/0/0
24LH11	1607	1256	2411	24.3	7	1/0/0
24LH12	1843	1662	2765	29.1	8	1/0/0
24LH13	2203	1935	3305	31.6	8	1/0/0
24LH14	2407	2105	3611	36.2	8	1/0/0
24LH15	2608	2290	3912	39.5	8	1/0/0
20LH17	2846	1930	4269	48.6	9	1/0/0
18LH18	2916	1739	4374	54.7	9	1/0/0
28' LENGTH						
16K2	186	106	279	5.7	4	2/0/0
16K3	207	118	311	5.9	4	3/0/0
16K4	249	138	374	6.8	4	2/0/0
18K4	282	177	423	7.1	4	2/0/0
24K4	381	323	572	7.8	5	2/0/0
22K5	392	302	588	8.1	5	2/0/0
24K5	429	362	644	8.3	5	2/0/0
28K6	548	541	822	8.8	5	1/0/0
24LH04	573	519	860	10.3	5	2/0/0
24LH05	656	555	984	11.5	5	2/0/0
24LH06	827	741	1241	14.6	5	2/0/0
28LH07	968	968	1452	15.1	6	2/0/0

JOIST DESIG.	TOTAL LOAD (ASD)	LOAD for L/360 DEFL.	TOTAL LOAD (LRFD)	JOIST WEIGHT (lbs/ft)	MAX CHORD WIDTH (IN)	BRIDG. (H/X/EX)
28' LENGTH (continued)						
24LH08	1008	865	1512	17	6	2/0/0
28LH08	1036	1036	1554	16.3	6	2/0/0
24LH10	1382	1074	2073	21.5	7	1/0/0
28LH10	1438	1438	2157	21.5	7	1/0/0
24LH11	1511	1124	2267	24	7	1/0/0
28LH11	1570	1570	2355	23.2	7	1/0/0
28LH12	1839	1839	2759	26.9	7	1/0/0
28LH13	2034	1944	3051	29.7	8	1/0/0
24LH13	2069	1733	3104	32.6	8	1/0/0
24LH14	2260	1885	3390	35.9	8	1/0/0
28LH14	2459	2459	3689	35.7	8	1/0/0
28LH15	2665	2665	3998	39	9	1/0/0
24LH16	2835	2263	4253	43.3	9	1/0/0
29' LENGTH						
16K3	193	106	290	5.9	4	3/0/0
16K4	232	124	348	6.5	4	2/0/0
18K4	263	159	395	7.1	4	2/0/0
24K4	355	290	533	7.5	5	2/0/0
22K6	398	295	597	8.2	5	2/0/0
28K7	550	522	825	9.3	5	1/0/0
24LH05	621	499	932	11.5	5	2/0/0
24LH06	782	666	1173	14.4	5	2/0/0
28LH07	920	920	1380	14.9	6	2/0/0
24LH08	951	778	1427	17.1	6	2/0/0
24LH09	1216	910	1824	21.3	7	2/0/0
28LH09	1271	1271	1907	20.2	7	2/0/0
24LH10	1302	965	1953	22.6	7	2/0/0
24LH11	1423	1011	2135	24.4	7	1/0/0
28LH11	1487	1487	2231	22.9	7	1/0/0
24LH12	1633	1338	2450	28.8	8	1/0/0
28LH13	1922	1747	2883	29.5	8	1/0/0
24LH13	1946	1558	2919	33.3	8	1/0/0
24LH14	2126	1695	3189	36.1	8	1/0/0
28LH14	2324	2324	3486	36.2	8	1/0/0
28LH15	2518	2518	3777	39.1	8	1/0/0
28LH16	2962	2839	4443	44.1	9	1/0/0
30' LENGTH						
16K4	217	112	326	6.4	4	2/0/0
20K3	227	153	341	6.6	5	3/0/0
16K5	244	126	366	7.3	4	2/0/0
16K6	266	137	399	7.8	5	2/0/0
24K6	406	319	609	8.2	5	2/0/0
24K7	453	353	680	8.9	5	2/0/0

JOIST DESIG.	TOTAL LOAD (ASD)	LOAD for L/360 DEFL.	TOTAL LOAD (LRFD)	JOIST WEIGHT (lbs/ft)	MAX CHORD WIDTH (IN)	BRIDG. (H/X/EX)
30' LENGTH (continued)						
30K11	550	543	825	9.5	13	1/0/0
24LH05	588	450	882	11.4	5	2/0/0
24LH06	741	601	1112	14.2	5	2/0/0
28LH06	755	755	1133	13.3	5	2/0/0
28LH07	874	874	1311	15.1	6	2/0/0
24LH08	899	702	1349	16.8	6	2/0/0
20LH10	924	585	1386	20.1	7	2/0/0
24LH09	1144	821	1716	20.7	7	2/0/0
28LH10	1291	1291	1937	20.9	7	2/0/0
28LH11	1409	1380	2114	22.6	7	1/0/0
24LH12	1540	1207	2310	27.8	8	1/0/0
28LH12	1651	1510	2477	26.8	7	1/0/0
28LH13	1818	1576	2727	29.7	8	1/0/0
24LH14	2002	1529	3003	36	8	1/0/0
28LH14	2199	2130	3299	35.7	8	1/0/0
28LH15	2383	2317	3575	39.1	8	1/0/0
28LH16	2798	2561	4197	44.3	9	1/0/0
24LH17	2819	2094	4229	49.2	9	1/0/0
20LH19	2965	1759	4448	62	11	1/0/0
31' LENGTH						
20K3	213	138	320	6.6	5	3/0/0
16K5	228	114	342	7.2	4	3/0/0
20K6	314	198	471	8	5	2/0/0
26K5	379	314	569	8.3	5	2/0/0
24K7	424	320	636	8.8	5	2/0/0
28K8	550	480	825	10	5	2/0/0
18LH06	566	307	849	14.3	5	2/0/0
20LH06	635	386	953	14.9	6	2/0/0
24LH07	800	598	1200	15.6	6	2/0/0
24LH08	850	635	1275	17	6	2/0/0
20LH10	894	545	1341	20.1	7	2/0/0
28LH09	1143	1074	1715	19.9	7	2/0/0
28LH10	1225	1169	1838	20.8	7	2/0/0
28LH11	1337	1249	2006	22.4	7	2/0/0
24LH12	1455	1093	2183	27.5	7	1/0/0
28LH12	1566	1367	2349	26.7	7	1/0/0
28LH13	1722	1427	2583	29.5	8	1/0/0
24LH14	1889	1384	2834	35.4	8	1/0/0
28LH14	2083	1928	3125	35.6	8	1/0/0
28LH15	2257	2098	3386	38.6	8	1/0/0
28LH16	2647	2319	3971	43.7	9	1/0/0
20LH19	2775	1592	4163	61.7	11	1/0/0

ECONOMICAL JOIST GUIDE

JOIST DESIG.	TOTAL LOAD (ASD)	LOAD for L/360 DEFL.	TOTAL LOAD (LRFD)	JOIST WEIGHT (lbs/ft)	MAX CHORD WIDTH (IN)	BRIDG. (H/X/EX)
32' LENGTH						
16K2	142	71	213	5.6	4	2/0/1
16K3	158	79	237	5.9	4	2/0/1
20K4	240	147	360	6.9	5	3/0/0
22K5	299	201	449	7.8	5	3/0/0
20K7	328	199	492	8.4	5	2/0/0
28K7	466	400	699	9.3	5	2/0/0
26K8	477	375	716	9.8	5	2/0/0
30K7	501	461	752	9.8	5	2/0/0
28K9	549	463	824	10.7	5	2/0/0
32LH06	655	655	983	13.1	5	2/0/0
32LH07	735	735	1103	14.1	5	2/0/0
24LH07	748	543	1122	15.4	6	2/0/0
32LH08	829	829	1244	15.2	6	2/0/0
28LH08	846	793	1269	15.8	6	2/0/0
32LH09	1099	1099	1649	19.8	7	2/0/0
28LH10	1163	1062	1745	20.8	7	2/0/0
32LH10	1184	1184	1776	20.8	7	2/0/0
28LH11	1270	1134	1905	22.8	7	2/0/0
32LH11	1296	1296	1944	22.8	7	2/0/0
32LH12	1522	1522	2283	26.4	7	1/0/0
28LH13	1633	1296	2450	29.3	8	1/0/0
32LH13	1789	1789	2684	30.8	8	1/0/0
32LH15	2050	2050	3075	34.6	8	1/0/0
28LH15	2140	1905	3210	38.5	9	1/0/0
32LH16	2691	2691	4037	43.4	9	1/0/0
28LH17	2888	2406	4332	50.3	9	1/0/0
33' LENGTH						
18K3	168	92	252	6.1	4	2/0/1
26K6	364	282	546	8.4	5	2/0/0
28K7	438	364	657	9.2	5	2/0/0
26K8	449	342	674	9.7	5	2/0/0
28K9	527	432	791	10.7	5	2/0/0
32LH06	629	629	944	13.1	5	2/0/0
32LH07	705	705	1058	14	5	2/0/0
28LH07	753	677	1130	15.3	6	2/0/0
28LH08	806	722	1209	16.2	6	2/0/0
24LH09	955	615	1433	20.2	7	2/0/0
24LH10	995	652	1493	21	7	2/0/0
24LH11	1054	683	1581	22.1	7	2/0/0
32LH10	1131	1131	1697	20.7	7	2/0/0
28LH11	1207	1033	1811	22.9	7	2/0/0
32LH12	1453	1453	2180	26.3	7	1/0/0
28LH13	1550	1181	2325	29.2	8	1/0/0

JOIST DESIG.	TOTAL LOAD (ASD)	LOAD for L/360 DEFL.	TOTAL LOAD (LRFD)	JOIST WEIGHT (lbs/ft)	MAX CHORD WIDTH (IN)	BRIDG. (H/X/EX)
33' LENGTH (continued)						
32LH13	1705	1705	2558	30.7	8	1/0/0
32LH14	1827	1827	2741	32.1	8	1/0/0
32LH15	1954	1870	2931	34	8	1/0/0
28LH15	2032	1735	3048	38.1	9	1/0/0
32LH16	2561	2553	3842	42.9	9	1/0/0
32LH17	2951	2920	4427	50.6	9	1/0/0
34' LENGTH						
18K3	158	84	237	6.1	4	2/0/1
26K5	315	237	473	8.2	5	2/0/0
24K7	352	242	528	8.8	5	2/0/0
24K8	389	264	584	9.5	5	2/0/0
28K9	496	395	744	10.6	5	2/0/0
28K10	516	410	774	10.9	5	2/0/0
24LH06	604	411	906	14.5	5	2/0/0
32LH07	678	678	1017	13.9	5	2/0/0
28LH07	718	618	1077	15.1	6	2/0/0
28LH08	768	660	1152	16	6	2/0/0
32LH09	1003	1003	1505	19.4	7	2/0/0
32LH10	1080	1080	1620	20.6	7	2/0/0
32LH11	1183	1183	1775	23	7	2/0/0
32LH12	1388	1388	2082	26.1	7	1/0/0
28LH13	1474	1079	2211	29	8	1/0/0
32LH14	1742	1653	2613	31.7	8	1/0/0
32LH15	1864	1708	2796	33.8	8	1/0/0
28LH15	1931	1585	2897	38.9	9	1/0/0
28LH16	2257	1752	3386	43.2	9	1/0/0
32LH17	2812	2668	4218	50.5	9	1/0/0
24LH19	2832	1804	4248	61.9	11	1/0/0
28LH18	2936	2286	4404	56.3	11	1/0/0
35' LENGTH						
18K3	149	77	224	6.1	4	2/0/1
28K6	349	275	524	8.5	5	2/0/0
28K7	389	305	584	9.1	5	2/0/0
30K7	418	351	627	9.4	5	2/0/0
28K8	430	333	645	9.9	5	2/0/0
28K9	468	361	702	10.6	5	2/0/0
28K10	501	389	752	11	5	2/0/0
32LH06	581	581	872	13.3	6	2/0/0
28LH06	600	502	900	13.7	5	2/0/0
32LH08	728	728	1092	14.9	6	2/0/0
32LH09	959	938	1439	19.5	7	2/0/0
32LH10	1033	1033	1550	21	7	2/0/0
28LH11	1094	865	1641	22.9	7	2/0/0

JOIST DESIG.	TOTAL LOAD (ASD)	LOAD for L/360 DEFL.	TOTAL LOAD (LRFD)	JOIST WEIGHT (lbs/ft)	MAX CHORD WIDTH (IN)	BRIDG. (H/X/EX)
35' LENGTH (continued)						
32LH12	1328	1323	1992	26.5	7	2/0/0
32LH13	1553	1470	2330	30.2	8	1/0/0
32LH14	1663	1514	2495	31.7	8	1/0/0
32LH15	1779	1564	2669	33.4	8	1/0/0
28LH15	1837	1452	2756	39.2	9	1/0/0
32LH16	2326	2136	3489	43.6	9	1/0/0
32LH17	2681	2443	4022	50.2	9	1/0/0
28LH18	2791	2094	4187	56.2	11	1/0/0
36' LENGTH						
18K3	141	70	212	6	4	2/0/1
28K6	330	252	495	8.5	5	2/0/0
28K7	368	280	552	9.1	5	2/0/0
30K7	395	323	593	9.4	5	2/0/0
28K8	406	306	609	9.8	5	2/0/0
28K9	442	332	663	10.6	5	2/0/0
28K10	487	366	731	11.3	5	2/0/0
24LH06	555	356	833	14.3	5	2/0/0
28LH06	574	461	861	13.8	5	2/0/0
32LH07	626	626	939	14.6	6	2/0/0
36LH08	668	668	1002	14.7	6	2/0/0
32LH08	698	689	1047	16	6	2/0/0
36LH09	851	851	1277	17.8	7	2/0/0
32LH09	917	861	1376	19.6	7	2/0/0
32LH10	989	950	1484	20.9	7	2/0/0
32LH11	1082	1040	1623	22.7	7	2/0/0
32LH12	1271	1215	1907	26.4	7	2/0/0
32LH13	1484	1350	2226	30.2	8	1/0/0
32LH14	1589	1391	2384	31.7	8	1/0/0
32LH15	1700	1437	2550	34.4	8	1/0/0
36LH15	1828	1828	2742	34.9	8	1/0/0
32LH16	2220	1961	3330	43.3	9	1/0/0
32LH17	2558	2244	3837	49.9	9	1/0/0
36LH17	2699	2699	4049	50.9	9	1/0/0
32LH18	2890	2563	4335	58.6	11	1/0/0
28LH19	2995	2127	4493	62.9	11	1/0/0
37' LENGTH						
20K3	149	81	224	6.7	5	2/0/1
26K5	265	183	398	8.1	5	2/0/0
26K7	322	221	483	8.9	5	2/0/0
30K7	373	297	560	9.4	5	2/0/0
26K9	387	262	581	9.9	5	2/0/0
30K8	413	325	620	10.2	5	2/0/0
30K9	449	352	674	10.9	5	2/0/0

JOIST DESIG.	TOTAL LOAD (ASD)	LOAD for L/360 DEFL.	TOTAL LOAD (LRFD)	JOIST WEIGHT (lbs/ft)	MAX CHORD WIDTH (IN)	BRIDG. (H/X/EX)
37' LENGTH (continued)						
30K10	474	374	711	11.3	13	2/0/0
32LH06	537	524	806	13.3	5	2/0/0
36LH07	562	562	843	13.3	5	2/0/0
24LH07	588	367	882	15.3	6	2/0/0
32LH08	670	634	1005	15.6	6	2/0/0
36LH09	820	820	1230	17.9	7	2/0/0
36LH10	967	967	1451	20.2	7	2/0/0
32LH11	1036	957	1554	22.8	7	2/0/0
36LH12	1224	1224	1836	26.1	7	2/0/0
32LH13	1419	1243	2129	30.1	8	2/0/0
36LH13	1471	1471	2207	30	8	2/0/0
32LH14	1519	1280	2279	32.1	8	1/0/0
36LH14	1621	1621	2432	32.7	8	1/0/0
36LH15	1754	1754	2631	34.8	8	1/0/0
32LH16	2120	1805	3180	43.4	9	1/0/0
32LH17	2443	2065	3665	49.4	9	1/0/0
36LH17	2586	2586	3879	50.4	9	1/0/0
32LH18	2760	2359	4140	58.8	11	1/0/0
36LH18	2921	2921	4382	58	11	1/0/0
24LH20	2982	1729	4473	81.4	11	1/0/0
38' LENGTH						
26K6	274	184	411	8.3	5	2/0/0
28K7	329	237	494	9.1	5	2/0/0
28K8	364	260	546	9.8	5	2/0/0
28K9	396	282	594	10.1	5	2/0/0
30K9	426	325	639	10.9	5	2/0/0
30K10	461	353	692	11.3	13	2/0/0
32LH06	517	484	776	13.3	5	2/0/0
36LH07	543	543	815	13.2	6	2/0/0
36LH08	620	620	930	14.8	6	2/0/0
32LH08	643	585	965	15.5	6	2/0/0
36LH09	780	780	1170	17.5	7	2/0/0
36LH10	929	929	1394	20.1	7	2/0/0
36LH11	983	983	1475	20.9	7	2/0/0
32LH11	993	883	1490	23	7	2/0/0
36LH12	1177	1177	1766	25.9	7	2/0/0
28LH13	1214	770	1821	29.7	8	2/0/0
32LH14	1454	1181	2181	31.9	8	1/0/0
36LH14	1556	1556	2334	33.3	8	1/0/0
28LH15	1591	1132	2387	38	8	1/0/0
28LH16	1810	1251	2715	42.5	9	1/0/0
32LH16	2026	1665	3039	43.7	9	1/0/0
36LH17	2479	2449	3719	50.6	9	1/0/0

ECONOMICAL JOIST GUIDE

JOIST DESIG.	TOTAL LOAD (ASD)	LOAD for L/360 DEFL.	TOTAL LOAD (LRFD)	JOIST WEIGHT (lbs/ft)	MAX CHORD WIDTH (IN)	BRIDG. (H/X/EX)
38' LENGTH (continued)						
36LH18	2800	2799	4200	57.4	11	1/0/0
24LH20	2826	1595	4239	81.3	11	1/0/0
39' LENGTH						
20K3	133	69	200	6.5	5	2/0/1
20K4	161	81	242	6.9	5	2/0/1
26K5	238	156	357	7.7	5	1/0/1
30K7	336	253	504	9.3	5	2/0/0
26K9	348	223	522	9.9	5	2/0/0
28K9	376	260	564	10.1	5	2/0/0
30K9	404	300	606	10.4	5	2/0/0
30K10	450	333	675	11.6	13	2/0/0
32LH06	498	447	747	13.2	5	2/0/0
36LH07	525	525	788	13.2	6	2/0/0
32LH07	558	498	837	14.4	5	2/0/0
32LH08	617	540	926	15.4	6	2/0/0
36LH09	762	762	1143	17.9	7	2/0/0
32LH09	807	676	1211	19.6	7	2/0/0
32LH10	870	746	1305	21	7	2/0/0
28LH11	909	623	1364	22.9	7	2/0/0
36LH12	1132	1132	1698	25.7	7	2/0/0
36LH13	1357	1357	2036	29.6	8	2/0/0
32LH14	1392	1091	2088	31.7	8	2/0/0
36LH14	1494	1494	2241	32.9	8	2/0/0
28LH15	1520	1046	2280	38	8	1/0/0
28LH16	1717	1157	2576	42.5	9	1/0/0
32LH16	1938	1539	2907	43.3	9	1/0/0
36LH17	2378	2264	3567	50.4	9	1/0/0
32LH18	2524	2012	3786	58.1	11	1/0/0
36LH18	2687	2587	4031	57.2	11	1/0/0
32LH19	2890	2230	4335	63.7	11	1/0/0
24LH21	2993	1631	4490	89.2	11	1/0/0
40' LENGTH						
20K3	127	64	191	6.5	5	2/0/1
26K7	275	174	413	8.9	5	2/0/0
30K7	319	234	479	9.2	5	2/0/0
26K9	331	207	497	9.8	5	2/0/0
30K9	384	278	576	10.3	5	2/0/0
30K10	438	315	657	11.6	13	2/0/0
32LH06	479	414	719	13.2	5	2/0/0
36LH07	508	508	762	13.5	6	2/0/0
32LH07	538	461	807	14.2	5	2/0/0
36LH08	576	576	864	14.7	6	2/0/0
28LH08	587	403	881	15.8	6	2/0/0

JOIST DESIG.	TOTAL LOAD (ASD)	LOAD for L/360 DEFL.	TOTAL LOAD (LRFD)	JOIST WEIGHT (lbs/ft)	MAX CHORD WIDTH (IN)	BRIDG. (H/X/EX)
40' LENGTH (continued)						
36LH09	735	735	1103	18.2	7	2/0/0
36LH10	860	839	1290	20	7	2/0/0
40LH11	879	879	1319	20.1	7	2/0/0
36LH11	910	910	1365	21.2	7	2/0/0
36LH12	1090	1088	1635	25.6	7	2/0/0
36LH13	1304	1275	1956	29.5	8	2/0/0
32LH14	1334	1011	2001	31.4	8	2/0/0
36LH14	1436	1401	2154	32.7	8	2/0/0
40LH14	1480	1480	2220	32.8	8	2/0/0
36LH15	1554	1475	2331	36.1	8	1/0/0
40LH15	1655	1655	2483	36.4	9	1/0/0
32LH16	1856	1426	2784	43	9	1/0/0
36LH16	1980	1831	2970	43.9	9	1/0/0
36LH17	2283	2097	3425	50.1	9	1/0/0
32LH18	2416	1863	3624	57.5	11	1/0/0
36LH18	2579	2396	3869	59	11	1/0/0
32LH19	2763	2066	4145	63.3	11	1/0/0
36LH19	2986	2661	4479	64.3	11	1/0/0
41' LENGTH						
22K4	161	85	242	7	5	2/0/1
24K4	176	101	264	7.1	5	2/0/1
26K6	235	146	353	8.3	5	1/0/1
28K6	253	170	380	8.4	5	1/0/1
28K8	312	206	468	9.4	5	2/0/0
28K9	340	224	510	10.1	5	2/0/0
30K9	365	258	548	10.3	5	2/0/0
28K10	404	263	606	11.9	5	2/0/0
28K12	427	277	641	12.5	5	2/0/0
24LH06	437	245	656	14.4	5	2/0/0
36LH07	491	491	737	13.5	5	2/0/0
32LH08	570	465	855	15.2	6	2/0/0
40LH09	682	682	1023	17.3	6	2/0/0
40LH10	810	810	1215	19.5	7	2/0/0
40LH11	850	850	1275	20.1	7	2/0/0
36LH11	876	847	1314	21.6	7	2/0/0
40LH12	1032	1032	1548	24.1	7	2/0/0
36LH12	1049	1009	1574	25.9	7	2/0/0
28LH13	1060	612	1590	29.6	8	2/0/0
36LH14	1381	1300	2072	32.8	8	2/0/0
40LH14	1427	1427	2141	32.5	8	2/0/0
40LH15	1597	1597	2396	36	8	1/0/0
32LH16	1778	1323	2667	42.8	9	1/0/0
36LH16	1902	1699	2853	43.8	9	1/0/0

JOIST DESIG.	TOTAL LOAD (ASD)	LOAD for L/360 DEFL.	TOTAL LOAD (LRFD)	JOIST WEIGHT (lbs/ft)	MAX CHORD WIDTH (IN)	BRIDG. (H/X/EX)
41' LENGTH (continued)						
36LH17	2193	1946	3290	50.1	9	1/0/0
32LH18	2315	1729	3473	55.9	9	1/0/0
36LH18	2477	2224	3716	59.1	11	1/0/0
32LH19	2644	1917	3966	62.9	11	1/0/0
36LH19	2863	2469	4295	63.9	11	1/0/0
28LH20	2884	1782	4326	81.8	11	1/0/0
42' LENGTH						
22K4	153	79	230	6.9	5	3/0/1
24K4	168	94	252	7.1	5	3/0/1
24K7	229	127	344	8.5	5	3/0/0
30K7	289	202	434	9.3	5	2/0/0
26K9	300	178	450	9.9	5	2/0/0
30K9	348	240	522	10.4	5	2/0/0
28K10	385	245	578	11.9	5	2/0/0
30K10	413	282	620	12.2	13	2/0/0
32LH06	445	357	668	13.2	5	2/0/0
36LH07	475	469	713	13.5	6	2/0/0
40LH08	490	490	735	13.4	6	2/0/0
32LH08	549	432	824	15.2	6	2/0/0
40LH09	660	660	990	17.1	6	2/0/0
32LH09	714	540	1071	19.6	7	2/0/0
40LH10	783	783	1175	19.6	7	2/0/0
36LH11	844	787	1266	21.4	7	2/0/0
28LH12	857	545	1286	24.2	7	2/0/0
32LH12	989	762	1484	26.1	7	2/0/0
40LH13	1207	1207	1811	28.5	8	2/0/0
32LH15	1314	901	1971	33.8	8	1/0/0
40LH14	1377	1377	2066	32.3	8	2/0/0
40LH15	1540	1540	2310	35.8	8	1/0/0
32LH16	1705	1230	2558	42.8	9	1/0/0
36LH16	1828	1580	2742	44.1	9	1/0/0
32LH17	1956	1407	2934	48.6	9	1/0/0
32LH18	2220	1608	3330	55.6	9	1/0/0
36LH18	2381	2068	3572	58.8	11	1/0/0
32LH19	2532	1782	3798	62.7	11	1/0/0
36LH19	2748	2295	4122	63.6	11	1/0/0
43' LENGTH						
22K4	146	73	219	6.9	5	3/0/1
24K4	160	88	240	7	5	3/0/1
26K5	196	116	294	7.8	5	2/0/1
26K7	238	140	357	8.7	5	1/0/1
30K8	305	206	458	9.6	5	2/0/0
30K9	332	223	498	10.3	5	2/0/0

JOIST DESIG.	TOTAL LOAD (ASD)	LOAD for L/360 DEFL.	TOTAL LOAD (LRFD)	JOIST WEIGHT (lbs/ft)	MAX CHORD WIDTH (IN)	BRIDG. (H/X/EX)
43' LENGTH (continued)						
28K10	367	228	551	11.4	5	2/0/0
30K10	394	263	591	12.1	13	2/0/0
30K11	407	270	611	12.6	13	2/0/0
32LH06	430	333	645	13.5	5	2/0/0
36LH07	460	437	690	13.4	6	2/0/0
32LH07	482	371	723	14.3	6	2/0/0
36LH08	518	479	777	15	6	2/0/0
32LH08	528	402	792	15.7	6	2/0/0
40LH09	640	640	960	16.9	6	2/0/0
36LH09	661	610	992	17.9	7	2/0/0
40LH11	794	794	1191	19.9	7	2/0/0
36LH11	814	733	1221	21.3	7	2/0/0
40LH12	964	964	1446	23.8	7	2/0/0
36LH12	974	874	1461	25.6	7	2/0/0
40LH13	1165	1165	1748	28.4	8	2/0/0
40LH14	1329	1329	1994	32.2	8	2/0/0
40LH15	1487	1487	2231	35.6	8	2/0/0
32LH16	1629	1146	2444	42.7	9	1/0/0
36LH16	1758	1471	2637	43.8	9	1/0/0
36LH17	2027	1685	3041	49.9	9	1/0/0
32LH18	2130	1497	3195	55.4	9	1/0/0
36LH18	2290	1926	3435	58.5	11	1/0/0
36LH19	2638	2138	3957	64	11	1/0/0
28LH21	2925	1708	4388	89.8	11	1/0/0
44' LENGTH						
22K4	139	68	209	6.9	5	3/0/1
24K4	153	82	230	7.1	5	3/0/1
26K6	204	118	306	8.2	5	2/0/1
28K6	220	137	330	8.4	5	2/0/1
28K7	245	152	368	8.9	5	1/0/1
28K9	295	181	443	10	5	2/0/0
26K10	324	182	486	11.2	11	2/0/0
28K10	350	212	525	11.4	5	2/0/0
30K11	398	258	597	12.6	13	2/0/0
32LH06	414	310	621	13.5	5	2/0/0
36LH07	445	408	668	13.5	5	2/0/0
32LH07	465	346	698	14.7	5	2/0/0
32LH08	509	375	764	15.5	6	2/0/0
44LH09	585	585	878	16.3	6	2/0/0
36LH09	639	569	959	17.9	7	2/0/0
32LH09	660	469	990	19.9	7	2/0/0
36LH10	742	629	1113	20.6	7	2/0/0
36LH11	785	684	1178	21.4	7	2/0/0

ECONOMICAL JOIST GUIDE

JOIST DESIG.	TOTAL LOAD (ASD)	LOAD for L/360 DEFL.	TOTAL LOAD (LRFD)	JOIST WEIGHT (lbs/ft)	MAX CHORD WIDTH (IN)	BRIDG. (H/X/EX)
44' LENGTH (continued)						
44LH12	897	897	1346	22.8	7	2/0/0
40LH12	932	932	1398	24.4	7	2/0/0
44LH13	1058	1058	1587	27.3	8	2/0/0
36LH13	1118	956	1677	29.5	8	2/0/0
44LH14	1260	1260	1890	30.4	8	2/0/0
40LH14	1284	1284	1926	32	8	2/0/0
44LH15	1466	1466	2199	36.3	9	2/0/0
32LH16	1555	1069	2333	42.4	9	1/0/0
36LH16	1692	1372	2538	43.5	9	1/0/0
44LH17	1929	1929	2894	46.4	9	1/0/0
32LH18	2046	1397	3069	55	9	1/0/0
36LH18	2204	1796	3306	57.5	11	1/0/0
32LH19	2312	1548	3468	62.2	11	1/0/0
36LH19	2535	1994	3803	64	11	1/0/0
32LH20	2900	1927	4350	82.8	11	1/0/0
45' LENGTH						
24K4	146	76	219	7.1	5	3/0/1
24K6	179	93	269	8.1	5	3/0/1
24K7	199	103	299	8.5	5	2/0/1
26K7	217	122	326	8.9	5	2/0/1
28K7	234	142	351	9	5	2/0/1
28K8	259	156	389	9.4	5	2/0/1
28K9	282	169	423	10	5	2/0/1
28K10	335	198	503	11.3	5	2/0/0
30K11	389	246	584	12.7	13	2/0/0
36LH07	431	381	647	13.4	5	2/0/0
32LH07	449	323	674	14.6	5	2/0/0
32LH08	490	351	735	15.4	6	2/0/0
44LH09	568	568	852	16.2	6	2/0/0
36LH09	618	532	927	17.9	7	2/0/0
36LH10	716	587	1074	20.5	7	2/0/0
44LH11	738	738	1107	20	7	2/0/0
32LH11	750	529	1125	23.4	7	2/0/0
44LH12	870	870	1305	23.1	7	2/0/0
40LH12	902	902	1353	24.4	7	2/0/0
40LH13	1087	1061	1631	28.4	8	2/0/0
44LH14	1220	1220	1830	31.3	8	2/0/0
40LH14	1240	1217	1860	32.6	8	2/0/0
36LH15	1285	1033	1928	35.8	8	2/0/0
32LH16	1486	998	2229	42.1	9	2/0/0
44LH16	1673	1673	2510	41.7	9	2/0/0
44LH17	1866	1866	2799	46.3	9	2/0/0
36LH17	1878	1468	2817	49.5	9	2/0/0

JOIST DESIG.	TOTAL LOAD (ASD)	LOAD for L/360 DEFL.	TOTAL LOAD (LRFD)	JOIST WEIGHT (lbs/ft)	MAX CHORD WIDTH (IN)	BRIDG. (H/X/EX)
45' LENGTH (continued)						
32LH18	1966	1305	2949	55	9	1/0/0
36LH18	2122	1678	3183	57.7	11	1/0/0
32LH19	2210	1447	3315	61.9	11	1/0/0
36LH19	2437	1863	3656	63.6	11	1/0/0
32LH20	2771	1801	4157	82.4	11	1/0/0
28LH22	2936	1688	4404	101.6	13	1/0/0
46' LENGTH						
24K4	139	71	209	7.1	5	3/0/1
26K5	171	95	257	7.7	5	2/0/1
26K6	186	103	279	8.2	5	2/0/1
26K7	207	114	311	8.7	5	2/0/1
28K7	224	133	336	9.1	5	2/0/1
28K8	248	146	372	9.5	5	2/0/1
24K10	272	135	408	11	5	3/0/0
28K10	320	186	480	11.3	5	2/0/0
30K10	344	214	516	11.6	13	2/0/0
30K11	381	236	572	13.1	13	2/0/0
36LH07	417	356	626	13.4	6	3/0/0
32LH07	433	302	650	14.4	5	3/0/0
32LH08	473	328	710	15.4	6	3/0/0
44LH09	552	552	828	16.1	6	2/0/0
36LH09	597	497	896	17.9	7	2/0/0
44LH10	609	609	914	17.4	7	2/0/0
40LH10	685	642	1028	19.8	7	2/0/0
40LH11	718	696	1077	20.2	7	2/0/0
44LH12	844	844	1266	23.1	7	2/0/0
40LH12	873	847	1310	24.1	7	2/0/0
44LH13	995	995	1493	27.6	8	2/0/0
36LH13	1039	836	1559	29.4	8	2/0/0
44LH14	1182	1182	1773	31	8	2/0/0
40LH14	1198	1139	1797	33.1	8	2/0/0
36LH15	1239	967	1859	35.9	8	2/0/0
40LH15	1340	1270	2010	36.6	8	2/0/0
32LH16	1422	934	2133	42.4	9	2/0/0
36LH16	1569	1200	2354	43.3	9	2/0/0
44LH17	1806	1806	2709	46	9	2/0/0
32LH18	1883	1221	2825	55.4	9	1/0/0
36LH18	2044	1570	3066	56.2	11	1/0/0
32LH19	2114	1354	3171	62	11	1/0/0
36LH19	2345	1744	3518	63.4	11	1/0/0
32LH20	2651	1685	3977	81.9	11	1/0/0
36LH20	2949	2174	4424	83.6	11	1/0/0
32LH21	2961	1866	4442	90.4	11	1/0/0

JOIST DESIG.	TOTAL LOAD (ASD)	LOAD for L/360 DEFL.	TOTAL LOAD (LRFD)	JOIST WEIGHT (lbs/ft)	MAX CHORD WIDTH (IN)	BRIDG. (H/X/EX)
47' LENGTH						
24K4	133	67	200	7	5	3/0/1
26K5	164	89	246	7.7	5	2/0/1
26K6	178	96	267	8.2	5	2/0/1
28K6	192	112	288	8.4	5	2/0/1
24K8	202	99	303	9.1	5	2/0/1
30K7	230	144	345	9.2	5	2/0/1
30K8	255	157	383	9.6	5	2/0/1
26K10	284	149	426	11.1	11	2/0/0
28K10	306	174	459	11.3	5	2/0/0
30K11	372	226	558	13.1	13	2/0/0
36LH07	404	334	606	13.8	6	2/0/1
32LH07	419	283	629	14.4	5	2/0/1
32LH08	456	307	684	15.3	6	3/0/0
44LH09	537	537	806	16.3	6	2/0/0
40LH09	564	546	846	17.5	6	1/0/1
32LH09	590	385	885	19.8	7	2/0/0
36LH10	667	515	1001	20.4	7	2/0/0
40LH11	695	652	1043	20.2	7	2/0/0
36LH11	706	560	1059	21.4	7	2/0/0
44LH12	819	819	1229	22.9	7	2/0/0
40LH12	845	794	1268	24.6	7	2/0/0
44LH13	966	966	1449	27.4	8	2/0/0
44LH14	1146	1146	1719	30.9	8	2/0/0
40LH14	1159	1067	1739	32.9	8	2/0/0
44LH15	1333	1333	2000	35.4	8	2/0/0
32LH16	1361	875	2042	42.2	9	2/0/0
36LH16	1512	1124	2268	43.3	9	2/0/0
44LH17	1748	1748	2622	46.1	9	2/0/0
32LH18	1803	1144	2705	55	9	1/0/0
32LH19	2025	1268	3038	61.8	11	1/0/0
36LH19	2258	1634	3387	63.2	11	1/0/0
32LH20	2539	1579	3809	81.6	11	1/0/0
36LH20	2839	2038	4259	83.3	11	1/0/0
48' LENGTH						
24K4	128	63	192	7	5	3/0/1
26K5	157	83	236	7.7	5	2/0/1
26K6	171	90	257	8.2	5	2/0/1
26K7	190	100	285	8.6	5	2/0/1
28K7	206	117	309	9.1	5	2/0/1
28K8	227	128	341	9.4	5	2/0/1
28K9	247	139	371	10	5	2/0/1
28K10	294	163	441	11.3	5	2/0/0
30K11	362	215	543	13.1	13	2/0/0

JOIST DESIG.	TOTAL LOAD (ASD)	LOAD for L/360 DEFL.	TOTAL LOAD (LRFD)	JOIST WEIGHT (lbs/ft)	MAX CHORD WIDTH (IN)	BRIDG. (H/X/EX)
48' LENGTH (continued)						
36LH07	392	313	588	13.7	6	2/0/1
32LH07	405	266	608	14.4	6	2/0/1
32LH08	440	288	660	15.3	6	3/0/0
44LH09	522	522	783	17	7	2/0/0
44LH10	576	576	864	18.1	7	2/0/0
36LH10	645	483	968	20.3	7	2/0/0
40LH11	673	612	1010	20.1	7	2/0/0
44LH12	795	795	1193	23	7	2/0/0
40LH12	818	745	1227	24.6	7	2/0/0
48LH13	905	905	1358	25.5	7	2/0/0
36LH13	967	735	1451	29	8	2/0/0
40LH13	982	873	1473	29.3	8	2/0/0
36LH14	1066	807	1599	32.3	8	2/0/0
48LH14	1102	1102	1653	30	8	2/0/0
40LH14	1121	1001	1682	33	8	2/0/0
48LH15	1264	1264	1896	33.1	8	2/0/0
44LH16	1518	1518	2277	41.1	9	2/0/0
44LH17	1693	1661	2540	47.1	9	2/0/0
32LH18	1729	1074	2594	54.9	9	1/0/0
36LH18	1900	1381	2850	55.8	11	1/0/0
32LH19	1940	1190	2910	61.5	11	1/0/0
36LH19	2175	1533	3263	62.6	11	1/0/0
36LH20	2735	1912	4103	83	11	1/0/0
32LH22	2990	1862	4485	102.9	13	1/0/0
49' LENGTH						
26K5	150	78	225	7.7	5	2/0/1
26K6	164	85	246	8.2	5	2/0/1
28K6	177	99	266	8.3	5	2/0/1
28K7	197	110	296	8.8	5	2/0/1
28K8	218	120	327	9.4	5	2/0/1
28K9	237	130	356	10	5	2/0/1
30K10	303	177	455	11.5	13	3/0/0
30K11	347	202	521	13.1	13	2/0/0
30K12	357	207	536	13.8	13	3/0/0
32LH07	391	250	587	14.5	6	2/0/1
32LH08	425	271	638	15.2	6	3/0/0
40LH09	531	482	797	17.4	6	2/0/1
32LH09	544	339	816	19.8	7	3/0/0
40LH11	652	575	978	20	7	2/0/0
48LH12	736	736	1104	21.3	7	2/0/0
44LH12	772	772	1158	23.6	7	2/0/0
36LH12	789	589	1184	25.8	7	2/0/0
48LH13	880	880	1320	25.4	7	2/0/0

ECONOMICAL JOIST GUIDE

JOIST DESIG.	TOTAL LOAD (ASD)	LOAD for L/360 DEFL.	TOTAL LOAD (LRFD)	JOIST WEIGHT (lbs/ft)	MAX CHORD WIDTH (IN)	BRIDG. (H/X/EX)
49' LENGTH (continued)						
44LH13	910	910	1365	27.2	8	2/0/0
36LH13	934	690	1401	30.1	8	2/0/0
44LH14	1077	1077	1616	31.6	8	2/0/0
48LH15	1229	1229	1844	33	8	2/0/0
44LH15	1253	1253	1880	35.1	8	2/0/0
44LH16	1470	1460	2205	40.8	9	2/0/0
44LH17	1640	1561	2460	46.8	9	2/0/0
32LH18	1658	1009	2487	54.5	9	1/0/0
36LH18	1834	1297	2751	57.4	11	1/0/0
32LH19	1862	1118	2793	61.4	11	1/0/0
36LH19	2096	1440	3144	62.6	11	1/0/0
32LH20	2334	1392	3501	81.2	11	1/0/0
36LH20	2636	1797	3954	83.4	11	1/0/0
36LH21	2902	1991	4353	92.6	11	1/0/0
50' LENGTH						
26K5	144	73	216	7.7	5	2/0/1
26K6	157	80	236	8.2	5	2/0/1
28K6	170	93	255	8.3	5	2/0/1
28K7	189	103	284	8.8	5	2/0/1
28K8	209	113	314	9.4	5	2/0/1
28K9	228	123	342	10	5	2/0/1
26K10	250	124	375	11.2	11	2/0/1
30K10	291	166	437	11.6	13	2/0/1
30K11	333	190	500	13.2	13	3/0/0
30K12	350	199	525	14	13	3/0/0
36LH07	368	277	552	13.7	5	2/0/1
36LH08	410	304	615	15.1	6	2/0/1
44LH09	494	494	741	16.3	6	3/0/0
40LH09	515	453	773	17.4	6	2/0/1
44LH10	545	545	818	17.9	7	2/0/0
40LH10	603	499	905	19.7	7	2/0/0
36LH11	637	465	956	21.4	7	2/0/0
44LH12	750	750	1125	23.2	7	2/0/0
40LH12	768	659	1152	24.5	7	2/0/0
48LH13	857	857	1286	25.3	7	2/0/0
44LH13	884	884	1326	27.3	8	2/0/0
36LH13	903	650	1355	29.9	8	2/0/0
44LH14	1045	1028	1568	31.1	8	2/0/0
48LH15	1194	1194	1791	32.7	8	2/0/0
44LH15	1215	1194	1823	35.6	8	2/0/0
36LH16	1359	933	2039	43.2	9	2/0/0
40LH16	1377	1084	2066	41.8	9	2/0/0
44LH17	1589	1468	2384	47	9	2/0/0

JOIST DESIG.	TOTAL LOAD (ASD)	LOAD for L/360 DEFL.	TOTAL LOAD (LRFD)	JOIST WEIGHT (lbs/ft)	MAX CHORD WIDTH (IN)	BRIDG. (H/X/EX)
50' LENGTH (continued)						
36LH18	1771	1221	2657	57.2	11	1/0/0
32LH19	1787	1052	2681	61.4	11	1/0/0
36LH19	2022	1355	3033	62.7	11	1/0/0
32LH20	2241	1310	3362	80.9	11	1/0/0
36LH20	2542	1690	3813	83	11	1/0/0
36LH21	2799	1873	4199	92.1	11	1/0/0
51' LENGTH						
26K5	139	69	209	7.7	5	2/0/1
26K6	151	75	227	8.2	5	2/0/1
28K6	163	88	245	8.4	5	2/0/1
28K7	182	97	273	8.8	5	2/0/1
28K8	201	106	302	9.4	5	2/0/1
28K9	219	115	329	10	5	2/0/1
26K10	241	116	362	11.2	11	2/0/1
30K10	279	157	419	11.6	13	2/0/1
30K11	320	179	480	13.1	13	3/0/0
30K12	343	192	515	14	13	3/0/0
36LH07	357	261	536	13.7	6	2/0/1
36LH08	397	286	596	15.1	6	2/0/1
44LH09	481	481	722	16.7	6	3/0/0
44LH10	530	530	795	17.7	7	2/0/0
40LH10	584	470	876	19.7	7	2/0/0
40LH11	613	509	920	20.5	7	2/0/0
44LH12	728	713	1092	23.4	7	2/0/0
36LH12	738	522	1107	25.7	7	2/0/0
48LH13	835	835	1253	25.1	7	2/0/0
44LH13	859	845	1289	27.5	8	2/0/0
36LH13	872	612	1308	29.9	8	2/0/0
44LH14	1013	968	1520	31	8	2/0/0
48LH15	1161	1161	1742	33.8	8	2/0/0
44LH15	1179	1125	1769	36.6	8	2/0/0
36LH16	1310	878	1965	43.1	9	2/0/0
40LH16	1332	1021	1998	41.6	9	2/0/0
48LH17	1536	1536	2304	45.5	9	2/0/0
36LH18	1710	1150	2565	57.4	11	1/0/0
36LH19	1951	1276	2927	62.6	11	1/0/0
32LH20	2154	1234	3231	81.2	11	1/0/0
32LH21	2405	1366	3608	89.3	11	1/0/0
36LH21	2701	1764	4052	91.9	11	1/0/0
32LH23	2985	1689	4478	119.6	13	1/0/0
52' LENGTH						
26K5	133	65	200	7.7	5	2/0/1
26K6	145	71	218	7.9	5	2/0/1

JOIST DESIG.	TOTAL LOAD (ASD)	LOAD for L/360 DEFL.	TOTAL LOAD (LRFD)	JOIST WEIGHT (lbs/ft)	MAX CHORD WIDTH (IN)	BRIDG. (H/X/EX)
52' LENGTH (continued)						
28K6	157	83	236	8.3	5	2/0/1
28K7	175	92	263	8.8	5	2/0/1
28K8	193	100	290	9.4	5	2/0/1
28K9	210	109	315	10	5	2/0/1
26K10	231	110	347	11.1	11	2/0/1
30K10	269	148	404	11.5	13	2/0/1
30K11	308	169	462	13.1	13	2/0/1
30K12	336	184	504	14	13	3/0/0
36LH07	347	246	521	13.7	5	2/0/1
40LH08	368	308	552	14.3	6	2/0/1
36LH08	384	270	576	15	6	2/0/1
44LH09	468	458	702	16.8	6	2/0/1
40LH09	486	402	729	17.5	6	2/0/1
40LH10	566	443	849	19.7	7	2/0/0
40LH11	594	480	891	20.4	7	2/0/0
52DLH13	643	643	965	20.9	7	2/0/0
44LH12	708	672	1062	23.5	7	2/0/0
40LH12	722	585	1083	24.3	7	2/0/0
52DLH15	826	826	1239	25.4	7	2/0/0
36LH13	844	577	1266	30.1	8	2/0/0
44LH14	984	913	1476	30.8	8	2/0/0
52DLH17	1025	1025	1538	30.2	8	2/0/0
48LH15	1129	1129	1694	34.6	8	2/0/0
44LH15	1145	1061	1718	36.4	8	2/0/0
36LH16	1259	828	1889	42.7	9	2/0/0
44LH16	1339	1220	2009	42	9	2/0/0
48LH17	1492	1492	2238	45.3	9	2/0/0
36LH18	1653	1084	2480	55.8	11	1/0/0
36LH19	1876	1204	2814	62.9	11	1/0/0
32LH20	2071	1163	3107	81.4	11	1/0/0
32LH21	2313	1288	3470	89	11	1/0/0
36LH21	2608	1664	3912	91.8	11	1/0/0
36LH22	2896	1889	4344	108.3	13	1/0/0
53' LENGTH						
28K6	151	78	227	8.3	5	2/0/1
28K7	168	87	252	8.8	5	2/0/1
28K8	186	95	279	9.4	5	2/0/1
30K9	218	119	327	10.1	5	2/0/1
30K10	258	140	387	11.5	13	2/0/1
30K11	296	159	444	13.1	13	2/0/1
30K12	330	177	495	14.3	13	3/0/0
32LH07	341	200	512	14.4	5	2/0/1
36LH08	373	255	560	14.9	6	2/0/1

JOIST DESIG.	TOTAL LOAD (ASD)	LOAD for L/360 DEFL.	TOTAL LOAD (LRFD)	JOIST WEIGHT (lbs/ft)	MAX CHORD WIDTH (IN)	BRIDG. (H/X/EX)
53' LENGTH (continued)						
44LH09	455	432	683	16.7	6	2/0/1
40LH09	472	380	708	17.7	6	2/0/1
40LH10	549	419	824	19.6	7	2/0/0
44LH11	583	514	875	20.3	7	2/0/0
52DLH13	643	643	965	21.3	7	2/0/0
52DLH14	735	735	1103	22.8	7	2/0/0
48LH13	792	792	1188	26	8	2/0/0
36LH13	816	545	1224	29.7	8	2/0/0
52DLH16	890	890	1335	28.2	8	2/0/0
44LH14	955	862	1433	30.8	8	2/0/0
52DLH17	1025	1025	1538	31.4	8	2/0/0
48LH15	1099	1099	1649	34.9	8	2/0/0
44LH15	1111	1002	1667	36.5	8	2/0/0
36LH16	1212	782	1818	42.7	9	2/0/0
44LH16	1299	1152	1949	41.7	9	2/0/0
48LH17	1450	1450	2175	45.2	9	2/0/0
36LH18	1598	1024	2397	55.6	11	2/0/0
36LH19	1806	1136	2709	62.4	11	2/0/0
32LH20	1993	1098	2990	81.1	11	2/0/0
32LH21	2226	1216	3339	88.8	11	1/0/0
36LH21	2519	1571	3779	91.3	11	1/0/0
32LH24	2921	1628	4382	123.3	13	1/0/0
54' LENGTH						
28K6	145	74	218	8.3	5	2/0/1
30K7	174	94	261	9	5	2/0/1
30K8	192	103	288	9.6	5	2/0/1
30K9	210	112	315	10.2	5	2/0/1
30K10	249	132	374	11.6	13	2/0/1
30K11	285	150	428	13.1	13	2/0/1
28K12	301	147	452	14.4	5	2/0/1
36LH07	327	220	491	13.9	6	2/0/1
40LH08	348	275	522	14.2	6	2/0/1
44LH09	443	409	665	16.6	6	2/0/1
40LH09	458	359	687	17.5	6	2/0/1
40LH10	533	396	800	19.7	7	2/0/0
40LH11	559	429	839	20.6	7	2/0/0
44LH12	669	600	1004	23.3	7	2/0/0
40LH12	679	522	1019	24.4	7	2/0/0
48LH13	771	771	1157	26.8	8	2/0/0
36LH13	790	515	1185	29.7	8	2/0/0
44LH14	927	815	1391	31	8	2/0/0
52DLH17	1025	1025	1538	32.5	8	2/0/0
48LH15	1069	1069	1604	35.4	9	2/0/0

ECONOMICAL JOIST GUIDE

JOIST DESIG.	TOTAL LOAD (ASD)	LOAD for L/360 DEFL.	TOTAL LOAD (LRFD)	JOIST WEIGHT (lbs/ft)	MAX CHORD WIDTH (IN)	BRIDG. (H/X/EX)
54' LENGTH (continued)						
36LH16	1167	739	1751	42.6	9	2/0/0
40LH16	1210	859	1815	42.2	9	2/0/0
36LH17	1338	846	2007	48.2	9	2/0/0
44LH17	1406	1164	2109	46.9	9	2/0/0
36LH18	1546	967	2319	55.8	11	2/0/0
36LH19	1739	1074	2609	62.1	11	2/0/0
32LH20	1920	1038	2880	81	11	2/0/0
32LH21	2144	1150	3216	88.6	11	1/0/0
36LH21	2435	1484	3653	90.9	11	1/0/0
36LH22	2684	1685	4026	103.1	13	1/0/0
32LH24	2813	1539	4220	122.7	13	1/0/0
36LH23	2977	1838	4466	121.6	13	1/0/0
55' LENGTH						
28K6	140	70	210	8.3	5	3/0/1
28K7	156	77	234	8.8	5	2/0/1
28K8	173	85	260	9.4	5	2/0/1
30K9	202	106	303	10.1	5	2/0/1
30K10	240	125	360	11.5	13	2/0/1
30K11	275	142	413	12.8	13	2/0/1
28K12	290	139	435	14.4	5	2/0/1
36LH07	318	208	477	13.8	6	2/0/1
40LH08	339	260	509	14.1	6	2/0/1
44LH09	432	387	648	16.5	6	2/0/1
44LH10	476	426	714	17.7	7	3/0/0
40LH10	518	374	777	19.7	7	3/0/0
40LH11	543	406	815	20.5	7	3/0/0
52DLH13	643	643	965	22.3	7	2/0/0
40LH12	659	494	989	24.3	7	2/0/0
52DLH14	735	735	1103	24.8	7	2/0/0
48LH13	751	751	1127	26.3	7	2/0/0
44LH13	767	673	1151	27.7	8	2/0/0
52DLH15	826	826	1239	27.7	8	2/0/0
44LH14	901	771	1352	30.6	8	2/0/0
52DLH17	1025	1025	1538	32.7	8	2/0/0
48LH15	1040	1027	1560	34	8	2/0/0
36LH16	1125	699	1688	42.1	9	2/0/0
44LH16	1223	1030	1835	41.6	9	2/0/0
36LH17	1289	801	1934	48	9	2/0/0
48LH17	1370	1324	2055	45.8	9	2/0/0
36LH18	1491	915	2237	55.2	11	2/0/0
28LH20	1596	733	2394	80.1	11	2/0/0
28LH21	1782	812	2673	88	11	1/0/0
36LH21	2351	1404	3527	91.2	11	1/0/0

JOIST DESIG.	TOTAL LOAD (ASD)	LOAD for L/360 DEFL.	TOTAL LOAD (LRFD)	JOIST WEIGHT (lbs/ft)	MAX CHORD WIDTH (IN)	BRIDG. (H/X/EX)
55' LENGTH (continued)						
36LH22	2587	1594	3881	102.8	13	1/0/0
32LH24	2711	1456	4067	122.8	13	1/0/0
36LH23	2878	1739	4317	121.2	13	1/0/0
56' LENGTH						
28K6	135	66	203	8.3	5	3/0/1
28K7	151	73	227	8.8	5	2/0/1
28K8	166	80	249	9.3	5	2/0/1
30K9	195	100	293	10.1	5	2/0/1
30K10	231	118	347	11.4	13	2/0/1
30K11	265	135	398	12.7	13	2/0/1
28K12	280	132	420	14.4	5	2/0/1
36LH07	309	197	464	13.8	5	2/0/1
36LH08	340	216	510	14.8	6	2/0/1
44LH09	421	366	632	16.5	6	2/0/1
40LH09	433	322	650	17.4	6	2/0/1
40LH10	503	355	755	19.7	7	3/0/0
40LH11	527	384	791	20.4	7	3/0/0
44LH12	633	538	950	23	7	3/0/0
52DLH13	643	641	965	23.1	7	2/0/0
56DLH14	662	662	993	23.4	8	2/0/0
48LH13	732	720	1098	26.1	7	2/0/0
44LH13	746	637	1119	27.6	8	2/0/0
52DLH15	826	807	1239	27.9	8	2/0/0
44LH14	876	730	1314	30.8	8	2/0/0
56DLH17	941	941	1412	31.1	8	2/0/0
48LH15	1013	973	1520	33.9	8	2/0/0
36LH16	1085	662	1628	41.8	9	2/0/0
44LH16	1188	976	1782	41.4	9	2/0/0
36LH17	1243	758	1865	47.9	9	2/0/0
48LH17	1333	1254	2000	45.7	9	2/0/0
36LH18	1438	867	2157	55	11	2/0/0
28LH20	1539	695	2309	79.9	11	2/0/0
28LH21	1718	769	2577	87.7	11	1/0/0
36LH21	2267	1330	3401	90.8	11	1/0/0
36LH22	2495	1510	3743	102.6	13	1/0/0
32LH24	2614	1379	3921	122.3	13	1/0/0
36LH23	2783	1647	4175	121	13	1/0/0
36LH24	2981	1787	4472	123.3	13	1/0/0
57' LENGTH						
30K7	156	80	234	8.9	5	2/0/1
30K8	173	88	260	9.5	5	2/0/1
30K9	188	95	282	10.1	5	2/0/1
30K10	223	112	335	11.4	13	2/0/1

JOIST DESIG.	TOTAL LOAD (ASD)	LOAD for L/360 DEFL.	TOTAL LOAD (LRFD)	JOIST WEIGHT (lbs/ft)	MAX CHORD WIDTH (IN)	BRIDG. (H/X/EX)
57' LENGTH (continued)						
30K11	256	128	384	12.7	13	2/0/1
30K12	290	145	435	14.6	13	2/0/1
36LH07	300	187	450	13.7	5	2/0/1
40LH08	322	233	483	14	6	2/0/1
44LH09	410	347	615	16.5	6	2/0/1
40LH09	421	305	632	17.3	6	2/0/1
44LH10	452	382	678	18	7	3/0/0
40LH10	488	336	732	20.1	7	3/0/0
36LH11	510	313	765	21.3	7	3/0/0
52DLH12	529	511	794	20.8	7	3/0/0
40LH12	622	444	933	24.1	7	3/0/0
52DLH13	643	618	965	24	7	2/0/0
48LH13	714	682	1071	25.9	7	2/0/0
52DLH14	735	691	1103	26.5	8	2/0/0
56DLH16	816	816	1224	28.6	9	2/0/0
44LH14	851	692	1277	31.5	8	2/0/0
52DLH16	890	866	1335	30.7	8	2/0/0
48LH15	986	922	1479	33.8	8	2/0/0
52DLH17	1025	989	1538	36.3	9	2/0/0
36LH16	1047	628	1571	41.7	9	2/0/0
44LH16	1154	925	1731	41.3	9	2/0/0
36LH17	1200	719	1800	47.9	9	2/0/0
48LH17	1296	1188	1944	45.7	9	2/0/0
36LH18	1388	822	2082	54.9	11	2/0/0
36LH19	1560	912	2340	61.2	11	2/0/0
32LH20	1722	882	2583	80.8	11	2/0/0
32LH21	1923	977	2885	88.5	11	1/0/0
36LH21	2188	1261	3282	90.6	11	1/0/0
36LH22	2408	1431	3612	102.5	13	1/0/0
32LH24	2523	1307	3785	122.1	13	1/0/0
36LH23	2692	1562	4038	120.9	13	1/0/0
36LH24	2877	1694	4316	123.5	13	1/0/0
58' LENGTH						
30K7	151	76	227	9	5	2/0/1
30K8	167	83	251	9.5	5	2/0/1
30K9	181	90	272	10.1	5	2/0/1
30K10	215	106	323	11.4	13	2/0/1
30K11	247	121	371	12.8	13	2/0/1
30K12	280	137	420	14.6	13	2/0/1
36LH07	292	177	438	13.6	6	2/0/1
40LH08	313	221	470	14	6	2/0/1
44LH09	399	329	599	16.6	6	2/0/1
36LH09	411	247	617	18.3	7	2/0/1

JOIST DESIG.	TOTAL LOAD (ASD)	LOAD for L/360 DEFL.	TOTAL LOAD (LRFD)	JOIST WEIGHT (lbs/ft)	MAX CHORD WIDTH (IN)	BRIDG. (H/X/EX)
58' LENGTH (continued)						
36LH10	454	273	681	19.9	7	3/0/0
40LH11	497	346	746	20.4	7	3/0/0
44LH11	508	392	762	20.1	7	3/0/0
52DLH12	529	493	794	20.9	7	3/0/0
44LH12	599	484	899	23.5	7	3/0/0
48LH13	696	648	1044	25.7	7	2/0/0
44LH13	708	573	1062	27.4	8	2/0/0
56DLH15	756	756	1134	27.2	9	2/0/0
44LH14	828	657	1242	31.4	8	2/0/0
48LH15	960	875	1440	33.6	8	2/0/0
52DLH17	1025	955	1538	36.8	9	2/0/0
44LH16	1121	878	1682	41.2	9	2/0/0
36LH17	1158	682	1737	48.1	9	2/0/0
44LH17	1250	938	1875	46.4	9	2/0/0
36LH18	1340	780	2010	54.4	9	2/0/0
36LH19	1506	866	2259	61.2	11	2/0/0
32LH20	1662	837	2493	80.5	11	2/0/0
32LH21	1857	927	2786	88.3	11	1/0/0
32LH22	2043	1051	3065	100.3	13	1/0/0
32LH24	2436	1240	3654	122.6	13	1/0/0
36LH23	2606	1482	3909	120.6	13	1/0/0
59' LENGTH						
30K7	146	72	219	8.9	5	2/0/1
30K8	161	79	242	9.5	5	2/0/1
30K9	175	86	263	10.1	5	2/0/1
30K10	208	101	312	11.4	13	2/0/1
30K11	239	115	359	12.7	13	2/0/1
30K12	271	130	407	14.3	13	2/0/1
36LH07	283	168	425	13.5	6	2/0/1
40LH08	305	210	458	14.2	6	2/0/1
44LH09	389	313	584	16.8	6	2/0/1
40LH09	399	275	599	17.4	6	2/0/1
44LH10	429	344	644	17.7	7	3/0/0
36LH10	440	260	660	19.9	7	3/0/0
40LH11	483	328	725	20.3	7	3/0/0
44LH11	494	372	741	20	7	3/0/0
52DLH12	529	477	794	20.4	7	3/0/0
44LH12	583	459	875	23.4	7	3/0/0
52DLH13	643	577	965	24	7	2/0/0
48LH13	679	615	1019	25.6	7	2/0/0
40LH13	698	468	1047	28.5	8	2/0/0
52DLH14	735	645	1103	28	8	2/0/0
52DLH15	826	727	1239	29.9	8	2/0/0

ECONOMICAL JOIST GUIDE

JOIST DESIG.	TOTAL LOAD (ASD)	LOAD for L/360 DEFL.	TOTAL LOAD (LRFD)	JOIST WEIGHT (lbs/ft)	MAX CHORD WIDTH (IN)	BRIDG. (H/X/EX)
59' LENGTH (continued)						
52DLH16	890	808	1335	32.5	8	2/0/0
44LH15	937	725	1406	36.2	8	2/0/0
52DLH17	1025	923	1538	36.4	8	2/0/0
44LH16	1089	834	1634	41.1	9	2/0/0
36LH17	1119	648	1679	48.1	9	2/0/0
48LH17	1228	1071	1842	46.2	9	2/0/0
36LH18	1295	740	1943	54.3	9	2/0/0
36LH19	1455	822	2183	61.1	11	2/0/0
32LH20	1606	794	2409	80.4	11	2/0/0
36LH21	2041	1136	3062	88.6	11	1/0/0
36LH22	2246	1290	3369	101.6	13	1/0/0
36LH23	2524	1407	3786	121.2	13	1/0/0
60' LENGTH						
30K7	141	69	212	8.9	5	2/0/1
30K8	156	75	234	9.5	5	2/0/1
30K9	169	81	254	10.1	5	2/0/1
30K10	201	96	302	11.4	13	2/0/1
30K11	231	109	347	12.7	13	2/0/1
30K12	262	124	393	14.2	13	2/0/1
36LH07	274	160	411	13.6	5	2/0/1
40LH08	297	200	446	14.1	6	2/0/1
44LH09	379	297	569	16.7	6	2/0/1
44LH10	418	327	627	17.7	7	3/0/0
40LH10	447	288	671	20	7	3/0/0
44LH11	481	354	722	20	7	3/0/0
52DLH12	529	461	794	21	7	3/0/0
48LH12	553	490	830	21.7	7	3/0/0
40LH12	571	380	857	24.4	7	3/0/0
52DLH13	643	558	965	25.2	7	2/0/0
44LH13	670	518	1005	27.6	8	2/0/0
52DLH14	735	623	1103	28	8	2/0/0
56DLH15	756	753	1134	28.4	9	2/0/0
56DLH16	816	816	1224	29.5	9	2/0/0
60DLH17	880	880	1320	31.7	9	2/0/0
48LH15	911	790	1367	33.4	8	2/0/0
56DLH17	941	941	1412	33.1	8	2/0/0
44LH16	1059	792	1589	41.3	9	2/0/0
36LH17	1082	616	1623	47.9	9	2/0/0
48LH17	1195	1018	1793	46.2	9	2/0/0
36LH18	1252	704	1878	54.3	9	2/0/0
36LH19	1407	781	2111	61	11	2/0/0
36LH20	1766	975	2649	80.7	11	2/0/0
36LH21	1973	1080	2960	88.6	11	1/0/0

JOIST DESIG.	TOTAL LOAD (ASD)	LOAD for L/360 DEFL.	TOTAL LOAD (LRFD)	JOIST WEIGHT (lbs/ft)	MAX CHORD WIDTH (IN)	BRIDG. (H/X/EX)
60' LENGTH (continued)						
36LH22	2172	1226	3258	101.5	13	1/0/0
36LH23	2446	1338	3669	120.8	13	1/0/0
36LH24	2595	1451	3893	122.9	13	1/0/0
62' LENGTH						
32LH06	227	114	341	13.2	5	0/2/2
36LH07	258	146	387	13.7	6	0/2/2
40LH08	283	181	425	14.2	6	0/2/2
44LH09	361	269	542	16.7	6	0/1/2
44LH10	398	297	597	18	7	0/1/2
40LH10	419	261	629	20	7	0/1/2
44LH11	457	320	686	20.6	7	0/1/2
52DLH11	475	395	713	20.2	7	0/1/2
52DLH12	529	431	794	21.4	7	0/1/2
44LH12	539	396	809	24.1	7	0/1/2
56DLH13	586	559	879	23.7	7	0/0/2
56DLH14	662	625	993	25.9	8	0/0/2
60DLH15	697	697	1046	27.6	8	0/0/2
44LH14	742	537	1113	31.4	8	0/0/2
60DLH16	766	766	1149	29.6	9	0/0/2
52DLH15	826	658	1239	32	8	0/0/2
52DLH16	890	732	1335	33.9	8	0/0/2
56DLH17	941	893	1412	34.6	8	0/0/2
48LH16	1010	825	1515	39.8	9	0/0/2
48LH17	1134	922	1701	46	9	0/0/2
36LH18	1172	638	1758	54.1	9	0/0/2
36LH19	1317	708	1976	60.9	11	0/0/2
32LH20	1454	684	2181	80.3	11	0/0/2
36LH21	1847	978	2771	88.3	11	0/0/2
36LH22	2033	1111	3050	101.3	13	0/0/2
36LH24	2429	1314	3644	122.7	13	0/0/2
36LH25	2875	1531	4313	145.3	13	0/0/2
64' LENGTH						
32LH06	214	104	321	13.2	5	0/2/2
36LH07	244	134	366	13.6	5	0/2/2
36LH08	268	146	402	14.7	6	0/2/2
44LH09	343	245	515	16.7	6	0/1/2
44LH10	379	270	569	17.9	7	0/1/2
40LH10	394	237	591	20.1	7	0/1/2
44LH11	434	291	651	20.4	7	0/1/2
52DLH11	460	371	690	20.1	7	0/1/2
52DLH12	513	405	770	22.1	7	0/1/2
56DLH13	586	525	879	23.8	7	0/1/2
52DLH13	623	490	935	26	7	0/1/2

JOIST DESIG.	TOTAL LOAD (ASD)	LOAD for L/360 DEFL.	TOTAL LOAD (LRFD)	JOIST WEIGHT (lbs/ft)	MAX CHORD WIDTH (IN)	BRIDG. (H/X/EX)
64' LENGTH (continued)						
56DLH14	662	586	993	26.7	8	0/0/2
52DLH14	712	547	1068	28.7	8	0/0/2
56DLH15	756	661	1134	29.2	9	0/0/2
60DLH16	766	766	1149	29.7	9	0/0/2
56DLH16	816	737	1224	31.4	9	0/0/2
60DLH17	880	880	1320	33.9	9	0/0/2
56DLH17	941	838	1412	36.2	8	0/0/2
52DLH17	993	783	1490	40.6	9	0/0/2
60DLH18	1016	1008	1524	39.7	9	0/0/2
48LH17	1077	838	1616	45.9	9	0/0/2
36LH18	1099	579	1649	54.3	9	0/0/2
36LH19	1236	643	1854	60.7	11	0/0/2
36LH20	1551	802	2327	80.7	11	0/0/2
36LH21	1733	889	2600	88.3	11	0/0/2
36LH22	1907	1009	2861	100.6	13	0/0/2
36LH24	2279	1194	3419	122.2	13	0/0/2
36LH25	2697	1391	4046	146.1	13	0/0/2
66' LENGTH						
36LH07	230	122	345	13.5	6	0/2/2
40LH08	254	150	381	14.3	6	0/2/2
40LH09	332	196	498	17.4	6	0/2/2
44LH10	361	246	542	18.2	7	0/1/2
44LH11	411	265	617	20.4	7	0/1/2
52DLH11	446	349	669	20.3	7	0/1/2
52DLH12	497	380	746	22.9	7	0/1/2
52DLH13	604	461	906	26.4	7	0/1/2
56DLH14	662	551	993	28.5	8	0/1/2
52DLH14	691	515	1037	30.3	8	0/1/2
60DLH16	766	738	1149	30.7	9	0/0/2
52DLH15	776	580	1164	33.1	8	0/0/2
56DLH16	816	692	1224	33.6	9	0/0/2
52DLH16	836	645	1254	36.3	8	0/0/2
60DLH17	880	839	1320	36.4	9	0/0/2
44LH16	900	594	1350	42	9	0/0/2
48LH16	912	683	1368	41.5	9	0/0/2
48LH17	1024	764	1536	46.2	9	0/0/2
36LH19	1161	586	1742	60.4	11	0/0/2
36LH20	1458	731	2187	80.2	11	0/0/2
36LH21	1629	810	2444	87.9	11	0/0/2
36LH22	1793	920	2690	100.2	13	0/0/2
36LH23	2042	1003	3063	119.4	13	0/0/2
36LH25	2536	1268	3804	145.5	13	0/0/2

JOIST DESIG.	TOTAL LOAD (ASD)	LOAD for L/360 DEFL.	TOTAL LOAD (LRFD)	JOIST WEIGHT (lbs/ft)	MAX CHORD WIDTH (IN)	BRIDG. (H/X/EX)
68' LENGTH						
36LH07	218	112	327	13.9	6	0/2/2
36LH08	239	123	359	15.1	6	0/2/2
44LH09	312	204	468	16.9	6	0/2/2
44LH10	344	225	516	18.1	7	0/1/2
48LH11	360	267	540	18.1	6	0/1/2
44LH11	388	243	582	20.3	7	0/1/2
52DLH11	433	328	650	21.2	7	0/1/2
48LH12	456	336	684	22.1	7	0/1/2
56DLH12	476	383	714	22.3	7	0/1/2
60DLH13	534	495	801	24.2	7	0/1/2
60DLH14	594	527	891	26.1	7	0/1/2
56DLH14	652	519	978	29.2	8	0/1/2
52DLH14	670	485	1005	30.6	8	0/1/2
64DLH16	710	710	1065	29.2	8	0/0/2
60DLH16	766	695	1149	31.7	9	0/0/2
56DLH16	804	652	1206	35.1	9	0/0/2
60DLH17	880	790	1320	36.5	9	0/0/2
52DLH17	934	694	1401	41.4	9	0/0/2
64DLH18	945	945	1418	39.8	9	0/0/2
60DLH18	1016	892	1524	42.1	9	0/0/2
36LH19	1094	536	1641	60.3	11	0/0/2
36LH20	1373	668	2060	80.1	11	0/0/2
36LH21	1534	740	2301	87.9	11	0/0/2
36LH22	1688	841	2532	99.7	13	0/0/2
36LH23	1929	917	2894	119.1	13	0/0/2
36LH25	2388	1158	3582	144.8	13	0/0/2
70' LENGTH						
36LH07	207	103	311	14	5	0/2/2
40LH08	228	127	342	14	6	0/2/2
44LH09	297	187	446	16.8	6	0/2/2
44LH10	328	206	492	18	7	0/1/2
48LH11	344	245	516	18.4	6	0/1/2
40LH11	358	198	537	21.3	7	0/1/2
52DLH10	383	283	575	20.1	7	0/1/2
52DLH11	420	310	630	21	7	0/1/2
44LH12	441	274	662	23.9	7	0/1/2
52DLH12	469	338	704	23.7	7	0/1/2
48LH13	521	367	782	26.4	7	0/1/2
60DLH13	534	467	801	25.5	7	0/1/2
56DLH13	561	438	842	26.7	7	0/1/2
60DLH14	594	497	891	28	8	0/1/2
44LH14	604	372	906	31.1	8	0/1/2
64DLH15	631	623	947	28.7	8	0/0/2

ECONOMICAL JOIST GUIDE

JOIST DESIG.	TOTAL LOAD (ASD)	LOAD for L/360 DEFL.	TOTAL LOAD (LRFD)	JOIST WEIGHT (lbs/ft)	MAX CHORD WIDTH (IN)	BRIDG. (H/X/EX)
70' LENGTH (continued)						
60DLH15	697	587	1046	31	8	0/0/2
52DLH15	731	515	1097	33.6	8	0/0/2
56DLH16	781	615	1172	34.4	9	0/0/2
64DLH17	818	793	1227	35.8	9	0/0/2
60DLH17	880	745	1320	39.4	9	0/0/2
56DLH17	900	700	1350	41	9	0/0/2
60DLH18	1016	842	1524	43	9	0/0/2
36LH19	1032	491	1548	60.5	11	0/0/2
36LH20	1296	612	1944	80	11	0/0/2
36LH21	1447	678	2171	87.8	11	0/0/2
36LH22	1593	770	2390	99.7	13	0/0/2
36LH23	1825	840	2738	119	13	0/0/2
36LH25	2253	1061	3380	145	13	0/0/2
72' LENGTH						
36LH07	196	95	294	14	6	0/2/2
40LH08	217	117	326	14.4	6	0/2/2
44LH09	284	172	426	16.8	6	0/2/2
44LH10	313	189	470	18.3	7	0/1/2
44LH11	347	204	521	20.2	7	0/1/2
52DLH10	372	268	558	20.3	7	0/1/2
52DLH11	409	293	614	21.7	7	0/1/2
52DLH12	456	319	684	23.5	7	0/1/2
48LH13	498	337	747	26.4	7	0/1/2
56DLH13	545	414	818	26.5	7	0/1/2
60DLH14	585	470	878	28.1	8	0/1/2
64DLH15	631	589	947	28.9	8	0/0/2
60DLH15	687	554	1031	32.5	8	0/0/2
64DLH16	710	659	1065	31.7	8	0/0/2
60DLH16	755	620	1133	35.4	9	0/0/2
64DLH17	818	750	1227	36.5	9	0/0/2
60DLH17	868	704	1302	40.2	9	0/0/2
64DLH18	945	848	1418	42.7	9	0/0/2
60DLH18	1002	796	1503	46	9	0/0/2
36LH20	1224	562	1836	80.5	11	0/0/2
36LH21	1367	623	2051	88.4	11	0/0/2
36LH22	1505	707	2258	100.2	13	0/0/2
36LH24	1799	837	2699	121.8	13	0/0/2
36LH25	2129	975	3194	145.6	13	0/0/2
74' LENGTH						
40LH08	206	108	309	14.5	6	0/2/2
44LH09	272	158	408	16.9	6	0/2/2
44LH10	300	174	450	18.7	7	0/2/2
44LH11	325	188	488	20	7	0/2/2

JOIST DESIG.	TOTAL LOAD (ASD)	LOAD for L/360 DEFL.	TOTAL LOAD (LRFD)	JOIST WEIGHT (lbs/ft)	MAX CHORD WIDTH (IN)	BRIDG. (H/X/EX)
74' LENGTH (continued)						
52DLH10	362	253	543	20.3	7	0/2/2
52DLH11	398	277	597	21.7	7	0/2/2
56DLH12	438	323	657	22.3	7	0/1/2
48LH13	476	311	714	26.6	7	0/1/2
56DLH13	530	392	795	27	7	0/1/2
44LH14	549	315	824	30.9	8	0/1/2
56DLH14	599	438	899	29.8	8	0/1/2
64DLH15	631	557	947	29.9	9	0/1/2
48LH15	649	420	974	34.6	8	0/1/2
60DLH16	735	586	1103	34.8	9	0/0/2
68DLH17	748	748	1122	34.3	8	0/0/2
64DLH17	818	709	1227	39.8	9	0/0/2
56DLH17	852	626	1278	42	9	0/0/2
68DLH18	865	848	1298	40.5	9	0/0/2
60DLH18	975	753	1463	46.8	9	0/0/2
68DLH19	997	963	1496	46.1	11	0/0/2
76' LENGTH						
40LH08	196	100	294	14.5	6	0/3/2
44LH09	259	146	389	17	6	0/2/2
44LH10	286	162	429	18.6	7	0/2/2
48LH11	303	191	455	18.4	6	0/2/2
52DLH10	353	240	530	20.3	7	0/2/2
52DLH11	387	263	581	21.9	7	0/2/2
52DLH12	432	286	648	24.6	7	0/2/2
48LH13	456	287	684	26.4	7	0/1/2
56DLH13	516	372	774	27.3	7	0/1/2
64DLH14	550	449	825	28.3	8	0/1/2
52DLH14	600	388	900	32.6	8	0/1/2
64DLH15	631	528	947	32.3	9	0/1/2
56DLH15	667	468	1001	33.5	9	0/1/2
56DLH16	719	521	1079	37	9	0/1/2
68DLH17	748	711	1122	36.8	8	0/1/2
64DLH17	818	672	1227	39.9	9	0/1/2
68DLH18	865	804	1298	41.5	9	0/0/2
64DLH18	945	760	1418	46	9	0/0/2
68DLH19	997	913	1496	48	11	0/0/2
78' LENGTH						
40LH08	187	93	281	14.4	6	0/3/2
44LH09	247	136	371	16.8	6	0/2/2
44LH10	272	150	408	18.5	7	0/2/2
48LH11	290	177	435	18.3	6	0/2/2
52DLH10	344	228	516	21.5	7	0/2/2
52DLH11	377	249	566	22.5	7	0/2/2

JOIST DESIG.	TOTAL LOAD (ASD)	LOAD for L/360 DEFL.	TOTAL LOAD (LRFD)	JOIST WEIGHT (lbs/ft)	MAX CHORD WIDTH (IN)	BRIDG. (H/X/EX)
78' LENGTH (continued)						
52DLH12	421	272	632	24.9	7	0/2/2
48LH13	437	265	656	26.4	7	0/1/2
60DLH13	486	376	729	26.7	7	0/1/2
52DLH13	511	329	767	29.2	8	0/1/2
60DLH14	540	400	810	28.7	8	0/1/2
52DLH14	584	368	876	32.9	8	0/1/2
64DLH15	615	501	923	32.1	9	0/1/2
68DLH16	663	594	995	33.5	9	0/1/2
72DLH17	689	689	1034	34.6	8	0/1/2
68DLH17	748	675	1122	36.9	8	0/1/2
60DLH17	801	600	1202	41.2	9	0/1/2
68DLH18	865	763	1298	42.1	9	0/0/2
60DLH18	925	677	1388	47.7	9	0/0/2
68DLH19	997	866	1496	48.1	11	0/0/2
80' LENGTH						
40LH08	178	86	267	15.5	6	0/3/2
44LH09	236	127	354	17.7	6	0/2/2
48LH11	279	164	419	19.7	6	0/2/2
52DLH10	335	217	503	22.5	7	0/2/2
52DLH11	368	237	552	23.9	7	0/2/2
60DLH12	390	296	585	23.1	7	0/2/2
52DLH12	410	258	615	26.6	7	0/2/2
60DLH13	474	357	711	27.9	7	0/1/2
52DLH13	498	313	747	31.3	8	0/1/2
64DLH14	523	405	785	30.6	8	0/1/2
80DLH15	643	631	965	37.5	11	0/1/2
68DLH16	663	564	995	35.6	9	0/1/2
64DLH16	675	533	1013	37.6	8	0/1/2
80DLH16	773	737	1160	45.1	11	0/1/2
56DLH17	788	535	1182	46.2	9	0/1/2
80DLH18	1010	1010	1515	55.1	11	0/1/2
80DLH19	1178	1136	1767	66.3	11	0/1/2
80DLH20	1324	1269	1986	70.2	11	0/1/2
82' LENGTH						
44LH09	226	118	339	18	6	0/3/2
48LH11	266	152	399	19.6	6	0/2/2
52DLH10	327	206	491	22.9	7	0/2/2
52DLH11	359	225	539	24.3	7	0/2/2
60DLH12	380	281	570	24	7	0/2/2
52DLH12	400	246	600	27.7	7	0/2/2
64DLH13	445	360	668	27.2	8	0/1/2
60DLH13	462	340	693	29.3	8	0/1/2
64DLH14	510	386	765	30.5	8	0/1/2

JOIST DESIG.	TOTAL LOAD (ASD)	LOAD for L/360 DEFL.	TOTAL LOAD (LRFD)	JOIST WEIGHT (lbs/ft)	MAX CHORD WIDTH (IN)	BRIDG. (H/X/EX)
82' LENGTH (continued)						
64DLH15	585	453	878	33.1	9	0/1/2
80DLH15	636	600	954	40.3	11	0/1/2
68DLH16	655	537	983	36.9	9	0/1/2
56DLH16	667	448	1001	40.4	9	0/1/2
80DLH16	764	701	1146	46.5	11	0/1/2
72DLH18	807	729	1211	44.3	9	0/1/2
68DLH18	855	690	1283	48.3	9	0/1/2
60DLH18	880	613	1320	52.7	9	0/1/2
68DLH19	984	783	1476	57	11	0/1/2
80DLH19	1164	1081	1746	68.7	11	0/1/2
80DLH20	1309	1208	1964	73.2	11	0/1/2
84' LENGTH						
44LH09	216	110	324	18.2	6	0/3/2
48LH11	255	142	383	19.5	6	0/2/2
52DLH10	319	196	479	23.6	7	0/2/2
56DLH11	336	230	504	23.4	7	0/2/2
52DLH11	350	215	525	26	7	0/2/2
48LH13	384	213	576	28.7	7	0/1/2
64DLH13	435	343	653	28.1	8	0/1/2
60DLH13	451	324	677	29.4	8	0/1/2
64DLH14	498	367	747	30.3	8	0/1/2
56DLH14	528	339	792	33.9	8	0/1/2
68DLH15	540	436	810	32	8	0/1/2
60DLH15	589	407	884	36	9	0/1/2
68DLH16	640	512	960	37.5	9	0/1/2
80DLH16	746	668	1119	42.2	11	0/1/2
72DLH18	807	694	1211	45.3	9	0/1/2
68DLH18	835	658	1253	48.6	9	0/1/2
60DLH18	859	584	1289	52.8	9	0/1/2
72DLH19	946	788	1419	52.7	11	0/1/2
68DLH19	961	746	1442	56.8	11	0/1/2
80DLH19	1137	1030	1706	63.3	11	0/1/2
80DLH20	1278	1151	1917	70.7	11	0/1/2
86' LENGTH						
44LH09	207	103	311	18.1	6	0/3/2
48LH11	244	133	366	19.4	6	0/2/2
52DLH10	312	187	468	23.6	7	0/2/2
56DLH11	328	220	492	23.8	7	0/2/2
64DLH12	350	269	525	24.1	7	0/2/2
48LH13	368	199	552	28.7	7	0/2/2
68DLH13	408	345	612	26.4	8	0/2/2
64DLH14	486	350	729	30.5	8	0/1/2
56DLH14	516	324	774	33.7	8	0/1/2

ECONOMICAL JOIST GUIDE

JOIST DESIG.	TOTAL LOAD (ASD)	LOAD for L/360 DEFL.	TOTAL LOAD (LRFD)	JOIST WEIGHT (lbs/ft)	MAX CHORD WIDTH (IN)	BRIDG. (H/X/EX)
86' LENGTH (continued)						
64DLH15	557	412	836	35.1	9	0/1/2
68DLH16	625	488	938	37.6	9	0/1/2
52DLH16	642	379	963	44.9	9	0/1/2
64DLH17	723	525	1085	44.1	9	0/1/2
72DLH18	797	662	1196	45.8	9	0/1/2
68DLH18	815	627	1223	48.9	9	0/1/2
80DLH18	952	877	1428	53.4	9	0/1/2
80DLH19	1110	982	1665	62.2	11	0/1/2
80DLH20	1248	1098	1872	69.2	11	0/1/2
88' LENGTH						
44LH09	198	96	297	18	6	0/3/2
44LH10	218	106	327	19.3	7	0/2/2
48LH11	234	125	351	19.7	6	0/2/2
52DLH10	305	179	458	23.5	7	0/2/2
52DLH11	334	196	501	25.9	7	0/2/2
52DLH12	373	213	560	28.2	7	0/2/2
64DLH13	415	313	623	28.6	8	0/2/2
60DLH13	431	295	647	29.6	8	0/2/2
60DLH14	479	314	719	32	8	0/2/2
68DLH15	515	397	773	33.1	8	0/1/2
64DLH15	545	393	818	34.9	9	0/1/2
68DLH16	611	466	917	37.7	9	0/1/2
80DLH16	712	608	1068	42.9	11	0/1/2
88DLH17	789	765	1184	45.8	11	0/1/2
88DLH18	905	871	1358	52.1	11	0/1/2
68DLH19	917	680	1376	57.4	11	0/1/2
88DLH19	1047	987	1571	59.6	11	0/1/2
80DLH19	1085	938	1628	62.3	11	0/1/2
88DLH20	1205	1180	1808	67.1	11	0/1/2
88DLH21	1486	1372	2229	80	11	0/0/2
90' LENGTH						
48LH10	208	108	312	18.4	6	0/2/2
48LH11	225	117	338	19.6	6	0/2/2
52DLH10	298	171	447	24.2	7	0/2/2
56DLH11	313	201	470	23.6	7	0/2/2
52DLH12	365	204	548	29	7	0/2/2
68DLH13	390	315	585	27.3	8	0/2/2
52DLH13	443	247	665	32.9	8	0/2/2
60DLH14	468	300	702	33.8	8	0/2/2
80DLH15	580	498	870	36.3	11	0/1/2
68DLH16	597	446	896	39	9	0/1/2
56DLH16	608	371	912	43.3	9	0/1/2
72DLH17	650	535	975	42.3	9	0/1/2

JOIST DESIG.	TOTAL LOAD (ASD)	LOAD for L/360 DEFL.	TOTAL LOAD (LRFD)	JOIST WEIGHT (lbs/ft)	MAX CHORD WIDTH (IN)	BRIDG. (H/X/EX)
90' LENGTH (continued)						
80DLH16	696	582	1044	44.1	11	0/1/2
80DLH17	805	699	1208	47	11	0/1/2
80DLH18	909	800	1364	54	9	0/1/2
88DLH19	1036	944	1554	60.2	11	0/1/2
80DLH19	1061	896	1592	64.2	11	0/1/2
80DLH20	1192	1002	1788	68.4	11	0/1/2
88DLH21	1470	1311	2205	80.3	11	0/0/2
92' LENGTH						
48LH11	216	110	324	19.7	6	0/3/2
52DLH10	285	159	428	24	7	0/3/2
52DLH11	313	174	470	25.7	7	0/3/2
52DLH12	349	191	524	28.9	7	0/2/2
52DLH13	424	231	636	32.7	8	0/2/2
68DLH14	439	324	659	30.7	8	0/2/2
60DLH14	458	287	687	33.7	8	0/2/2
80DLH15	567	476	851	35.9	11	0/1/2
68DLH16	584	426	876	39.5	9	0/1/2
56DLH16	594	355	891	44.6	9	0/1/2
68DLH17	658	484	987	43.5	9	0/1/2
64DLH17	676	458	1014	45.1	9	0/1/2
88DLH17	764	700	1146	46.6	11	0/1/2
80DLH17	787	669	1181	50.1	11	0/1/2
80DLH18	890	766	1335	54.2	9	0/1/2
88DLH19	1014	903	1521	60	11	0/1/2
80DLH19	1038	858	1557	64	11	0/1/2
80DLH20	1167	959	1751	68.3	11	0/1/2
88DLH21	1438	1255	2157	82.9	11	0/1/2
94' LENGTH						
48LH10	192	96	288	18.5	6	0/3/2
48LH11	208	103	312	20	7	0/3/2
52DLH10	273	150	410	24.1	7	0/3/2
52DLH11	299	164	449	25.7	7	0/3/2
52DLH12	334	179	501	28.8	7	0/3/2
56DLH12	345	200	518	28.1	7	0/3/2
52DLH13	406	216	609	32.7	8	0/2/2
72DLH14	418	328	627	30.4	9	0/2/2
80DLH15	555	456	833	36.7	11	0/1/2
68DLH16	572	408	858	40.2	9	0/1/2
72DLH17	623	491	935	42.7	9	0/1/2
64DLH17	661	439	992	46.3	9	0/1/2
68DLH18	746	525	1119	50.3	9	0/1/2
80DLH18	871	733	1307	54.1	9	0/1/2
88DLH19	992	865	1488	62.1	11	0/1/2

ECONOMICAL JOIST GUIDE

JOIST DESIG.	TOTAL LOAD (ASD)	LOAD for L/360 DEFL.	TOTAL LOAD (LRFD)	JOIST WEIGHT (lbs/ft)	MAX CHORD WIDTH (IN)	BRIDG. (H/X/EX)
94' LENGTH (continued)						
80DLH19	1016	821	1524	65.9	11	0/1/2
80DLH20	1142	918	1713	68.1	11	0/1/2
88DLH21	1408	1202	2112	83.7	11	0/1/2
96' LENGTH						
48LH10	185	90	278	18.7	6	0/3/2
48LH11	200	97	300	20.2	7	0/3/2
52DLH10	261	140	392	23.6	7	0/3/2
52DLH11	287	153	431	26.1	7	0/3/2
48LH13	300	145	450	28.7	7	0/2/2
56DLH12	338	192	507	28.2	7	0/3/2
48LH14	353	171	530	32.6	8	0/2/2
52DLH13	389	203	584	33.1	8	0/2/2
60DLH14	439	264	659	33.4	8	0/2/2
80DLH15	543	437	815	36.6	11	0/1/2
60DLH16	566	348	849	43.5	9	0/1/2
88DLH16	648	574	972	44.2	11	0/1/2
88DLH17	732	643	1098	47.2	11	0/1/2
80DLH17	754	614	1131	49.4	11	0/1/2
88DLH18	840	732	1260	53.5	11	0/1/2
80DLH18	853	703	1280	57.8	11	0/1/2
96DLH19	973	922	1460	60.5	13	0/1/2
80DLH19	995	788	1493	65.2	11	0/1/2
96DLH20	1095	1045	1643	67.8	13	0/1/2
88DLH20	1118	991	1677	69.4	11	0/1/2
96DLH21	1374	1282	2061	80.2	13	0/1/2
96DLH22	1540	1490	2310	92	13	0/1/2
98' LENGTH						
52DLH10	251	132	377	23.5	7	0/3/2
52DLH11	275	144	413	26	7	0/3/2
60DLH12	318	197	477	26.3	7	0/3/2
56DLH12	331	184	497	29.5	7	0/3/2
60DLH13	387	238	581	30.7	8	0/2/2
56DLH13	401	223	602	33.5	8	0/2/2
64DLH14	427	270	641	33.8	8	0/2/2
80DLH15	532	420	798	39	11	0/1/2
60DLH16	555	334	833	43.3	9	0/1/2
80DLH16	640	490	960	44.9	11	0/1/2
88DLH17	717	617	1076	46.9	11	0/1/2
80DLH17	739	590	1109	50.4	11	0/1/2
88DLH18	823	702	1235	53.4	11	0/1/2
80DLH18	835	675	1253	58.2	11	0/1/2
96DLH19	964	885	1446	60.7	13	0/1/2
80DLH19	974	756	1461	65.5	11	0/1/2

JOIST DESIG.	TOTAL LOAD (ASD)	LOAD for L/360 DEFL.	TOTAL LOAD (LRFD)	JOIST WEIGHT (lbs/ft)	MAX CHORD WIDTH (IN)	BRIDG. (H/X/EX)
98' LENGTH (continued)						
88DLH20	1095	951	1643	69.2	11	0/1/2
96DLH21	1361	1230	2042	83.9	13	0/1/2
96DLH22	1524	1430	2286	92.2	13	0/1/2
100' LENGTH						
52DLH10	241	124	362	23.5	13	0/0/5
52DLH11	264	135	396	26	7	0/0/5
52DLH12	295	149	443	29.2	7	0/0/5
56DLH12	318	173	477	29.5	7	0/0/5
52DLH13	358	180	537	33	7	0/0/4
60DLH13	379	228	569	32.5	7	0/0/4
68DLH14	404	274	606	32.2	8	0/0/4
60DLH14	421	243	632	36	8	0/0/4
72DLH15	450	323	675	34	9	0/0/4
64DLH15	479	304	719	38.4	8	0/0/4
72DLH16	520	381	780	39.6	9	0/0/3
64DLH16	540	341	810	43.7	9	0/0/3
72DLH17	585	433	878	43.5	9	0/0/3
88DLH16	622	529	933	44.9	11	0/0/3
88DLH17	703	592	1055	47	11	0/0/3
80DLH17	724	566	1086	52.9	11	0/0/3
88DLH18	806	674	1209	53.9	11	0/0/3
80DLH18	818	648	1227	59.3	11	0/0/3
96DLH19	944	850	1416	62.8	13	0/0/3
80DLH19	955	726	1433	64.8	11	0/0/3
88DLH20	1073	913	1610	69	11	0/0/3
96DLH21	1333	1181	2000	84	13	0/0/3
96DLH22	1494	1373	2241	92.8	13	0/0/3
105' LENGTH						
56DLH11	253	136	380	26	9	0/0/5
64DLH12	286	180	429	26.7	9	0/0/5
60DLH12	297	171	446	28.6	9	0/0/5
64DLH13	348	219	522	31	8	0/0/4
64DLH14	398	235	597	33.7	8	0/0/4
72DLH15	429	293	644	35.6	9	0/0/4
80DLH15	497	365	746	37.8	11	0/0/4
64DLH16	514	309	771	43.7	9	0/0/4
72DLH17	558	393	837	44.7	9	0/0/4
68DLH17	577	372	866	48.4	9	0/0/4
96DLH17	668	597	1002	49.1	9	0/0/4
80DLH17	690	513	1035	52.4	11	0/0/4
104DLH18	733	733	1100	52.8	0	0/0/4
104DLH19	892	850	1338	61.6	0	0/0/4
80DLH19	909	658	1364	66.6	11	0/0/4

ECONOMICAL JOIST GUIDE

JOIST DESIG.	TOTAL LOAD (ASD)	LOAD for L/360 DEFL.	TOTAL LOAD (LRFD)	JOIST WEIGHT (lbs/ft)	MAX CHORD WIDTH (IN)	BRIDG. (H/X/EX)
105' LENGTH (continued)						
96DLH20	1012	873	1518	69.5	13	0/0/4
104DLH21	1260	1181	1890	84.5	0	0/0/3
96DLH21	1270	1071	1905	87.6	13	0/0/3
104DLH22	1413	1374	2120	93.1	0	0/0/3
104DLH23	1556	1438	2334	100.5	0	0/0/3
110' LENGTH						
56DLH11	231	118	347	25.8	9	0/0/6
56DLH12	263	130	395	28.8	7	0/0/5
60DLH12	274	150	411	28.4	9	0/0/5
56DLH13	319	157	479	32.7	7	0/0/5
64DLH13	332	200	498	31.9	8	0/0/5
68DLH14	367	226	551	34	8	0/0/5
64DLH14	380	214	570	36.5	8	0/0/5
68DLH15	412	254	618	37.2	8	0/0/4
80DLH15	474	333	711	41.1	11	0/0/4
68DLH16	489	298	734	43.6	8	0/0/4
80DLH16	570	389	855	47.2	11	0/0/4
96DLH17	638	544	957	50.6	9	0/0/4
104DLH18	700	681	1050	52.6	0	0/0/4
88DLH18	733	557	1100	59.2	11	0/0/4
80DLH18	744	535	1116	62.2	11	0/0/4
96DLH19	859	702	1289	64.8	13	0/0/4
104DLH20	957	876	1436	67.7	0	0/0/4
88DLH20	975	754	1463	72.8	11	0/0/4
88DLH21	1203	877	1805	90.5	11	0/0/3
96DLH22	1358	1134	2037	95.8	13	0/0/3
104DLH23	1485	1309	2228	104.5	0	0/0/3
115' LENGTH						
60DLH12	252	131	378	27.9	9	0/0/6
60DLH13	306	158	459	32.8	7	0/0/5
60DLH14	338	170	507	35.9	8	0/0/5
64DLH14	360	193	540	37	8	0/0/5
72DLH15	391	244	587	37.7	9	0/0/4
72DLH16	453	288	680	43.9	9	0/0/4
68DLH16	467	272	701	45.3	8	0/0/4
80DLH16	535	347	803	45.6	9	0/0/4
96DLH17	610	497	915	50.9	9	0/0/4
104DLH18	669	623	1004	53	0	0/0/4
96DLH18	687	566	1031	56.5	9	0/0/4
88DLH18	701	509	1052	60.2	11	0/0/4
112DLH19	801	773	1202	73.4	4	0/0/4
96DLH19	821	642	1232	66.5	11	0/0/4
104DLH20	915	801	1373	70.1	0	0/0/4

JOIST DESIG.	TOTAL LOAD (ASD)	LOAD for L/360 DEFL.	TOTAL LOAD (LRFD)	JOIST WEIGHT (lbs/ft)	MAX CHORD WIDTH (IN)	BRIDG. (H/X/EX)
115' LENGTH (continued)						
88DLH20	933	690	1400	76.2	11	0/0/4
104DLH21	1151	984	1727	87.8	0	0/0/3
104DLH22	1290	1145	1935	93.6	0	0/0/3
112DLH23	1412	1310	2118	119	4	0/0/3
112DLH24	1673	1587	2510	130.9	4	0/0/3
120' LENGTH						
60DLH12	232	115	348	27.8	9	0/0/6
60DLH13	282	139	423	32.6	7	0/0/5
68DLH13	293	177	440	32.4	9	0/0/5
64DLH14	332	171	498	36.5	8	0/0/5
80DLH15	408	262	612	39.5	11	0/0/4
72DLH16	434	264	651	43.9	9	0/0/4
80DLH16	493	305	740	45.1	9	0/0/4
88DLH16	518	367	777	47.5	9	0/0/4
96DLH17	585	457	878	54.9	11	0/0/4
104DLH18	642	572	963	53.6	0	0/0/4
96DLH18	658	520	987	59.5	11	0/0/4
88DLH18	672	468	1008	59.8	11	0/0/4
104DLH19	780	650	1170	64.9	0	0/0/4
112DLH20	869	804	1304	68.5	4	0/0/4
96DLH20	886	668	1329	77	13	0/0/4
120DLH21	1018	1016	1527	78.3	4	0/0/3
112DLH21	1094	990	1641	88.6	4	0/0/3
120DLH22	1167	1167	1751	91.7	4	0/0/3
104DLH22	1236	1051	1854	96.9	0	0/0/3
112DLH23	1353	1203	2030	104.8	4	0/0/3
120DLH24	1532	1497	2298	111.8	4	0/0/3
112DLH24	1604	1457	2406	121.1	4	0/0/3
120DLH25	1755	1754	2633	130.7	4	0/0/3
125' LENGTH						
64DLH12	221	116	332	28.9	9	0/0/6
64DLH13	269	141	404	33.2	8	0/0/5
64DLH14	306	151	459	36.3	8	0/0/5
68DLH14	317	171	476	37	8	0/0/5
80DLH15	377	231	566	39.4	11	0/0/5
64DLH16	394	198	591	45	9	0/0/4
72DLH16	416	243	624	45.6	9	0/0/4
80DLH16	454	270	681	45.8	9	0/0/4
88DLH16	482	328	723	47.1	9	0/0/4
88DLH17	544	366	816	52.7	11	0/0/4
96DLH17	561	421	842	54	9	0/0/4
88DLH18	625	417	938	59.1	11	0/0/4
72DLH19	643	355	965	66.6	11	0/0/4

JOIST DESIG.	TOTAL LOAD (ASD)	LOAD for L/360 DEFL.	TOTAL LOAD (LRFD)	JOIST WEIGHT (lbs/ft)	MAX CHORD WIDTH (IN)	BRIDG. (H/X/EX)
125' LENGTH (continued)						
112DLH19	737	654	1106	66.3	4	0/0/4
120DLH20	793	759	1190	69	4	0/0/4
112DLH20	834	741	1251	73.3	4	0/0/4
120DLH21	986	936	1479	80.1	4	0/0/4
112DLH21	1050	912	1575	88.1	4	0/0/4
120DLH22	1130	1088	1695	91.7	4	0/0/4
112DLH22	1179	1059	1769	97	4	0/0/4
120DLH23	1251	1137	1877	100.9	4	0/0/4
104DLH23	1307	1013	1961	113.5	0	0/0/4
120DLH24	1483	1379	2225	119.9	4	0/0/4
112DLH24	1540	1343	2310	125.7	4	0/0/4
130' LENGTH						
68DLH13	255	142	383	33.6	9	0/0/6
68DLH14	294	152	441	36.8	8	0/0/6
80DLH15	350	205	525	39.1	11	0/0/5
80DLH16	419	240	629	45.2	9	0/0/5
88DLH16	447	291	671	46.9	9	0/0/5
88DLH17	502	325	753	52.2	11	0/0/5
96DLH17	540	389	810	54	9	0/0/5
104DLH18	592	487	888	57.8	0	0/0/4
96DLH18	608	443	912	60.5	9	0/0/4
112DLH19	708	604	1062	65.7	4	0/0/4
120DLH20	762	702	1143	68.9	4	0/0/4
112DLH20	802	685	1203	73.4	4	0/0/4
96DLH20	824	569	1236	76.5	13	0/0/4
120DLH21	948	865	1422	87.8	4	0/0/4
112DLH21	1010	843	1515	89.9	4	0/0/4
120DLH22	1087	1006	1631	93.3	4	0/0/4
104DLH22	1141	895	1712	100	0	0/0/4
120DLH23	1202	1051	1803	104.3	4	0/0/4
112DLH23	1249	1025	1874	109.8	4	0/0/4
120DLH24	1426	1275	2139	120.9	4	0/0/4
112DLH24	1480	1241	2220	123.8	4	0/0/4
120DLH25	1634	1494	2451	134.5	4	0/0/4
135' LENGTH						
68DLH13	237	127	356	33.4	9	0/0/6
68DLH14	273	135	410	36.6	8	0/0/6
80DLH15	326	183	489	39.6	11	0/0/5
68DLH16	360	178	540	45.2	8	0/0/5
72DLH16	373	200	560	46.3	9	0/0/5
88DLH16	416	260	624	46.8	9	0/0/5
88DLH17	465	291	698	52	11	0/0/5
96DLH17	503	347	755	53.8	9	0/0/5

JOIST DESIG.	TOTAL LOAD (ASD)	LOAD for L/360 DEFL.	TOTAL LOAD (LRFD)	JOIST WEIGHT (lbs/ft)	MAX CHORD WIDTH (IN)	BRIDG. (H/X/EX)
135' LENGTH (continued)						
88DLH18	535	331	803	58.6	11	0/0/5
104DLH18	570	452	855	59.2	0	0/0/5
88DLH19	617	375	926	64.6	11	0/0/5
112DLH19	682	560	1023	68.2	4	0/0/5
120DLH20	734	651	1101	69.1	4	0/0/5
112DLH20	772	635	1158	72.8	4	0/0/5
120DLH21	913	802	1370	86.8	4	0/0/4
112DLH21	973	782	1460	91.6	4	0/0/4
120DLH22	1047	932	1571	94.7	4	0/0/4
112DLH22	1091	908	1637	99.6	4	0/0/4
120DLH23	1158	975	1737	103.1	4	0/0/4
112DLH23	1203	950	1805	113.4	4	0/0/4
120DLH24	1373	1182	2060	124	4	0/0/4
112DLH24	1425	1151	2138	130	4	0/0/4
120DLH25	1573	1385	2360	134.9	4	0/0/4
140' LENGTH						
72DLH14	262	136	393	38.4	11	0/0/6
80DLH15	303	164	455	40.2	11	0/0/5
80DLH16	361	192	542	44.9	9	0/0/5
88DLH16	389	233	584	47.6	9	0/0/5
88DLH17	433	260	650	52.5	11	0/0/5
72DLH18	457	231	686	59.1	9	0/0/5
96DLH18	528	355	792	59.3	9	0/0/5
104DLH18	547	417	821	60.7	0	0/0/5
96DLH19	629	402	944	66.2	11	0/0/5
104DLH19	665	474	998	68.6	0	0/0/5
120DLH20	708	605	1062	70.9	4	0/0/5
112DLH20	745	590	1118	79.3	4	0/0/5
120DLH21	880	746	1320	85.5	4	0/0/4
112DLH21	938	727	1407	94.6	4	0/0/4
120DLH22	1009	867	1514	97	4	0/0/4
120DLH23	1117	906	1676	104.1	4	0/0/4
112DLH23	1160	883	1740	116.6	4	0/0/4
120DLH24	1324	1099	1986	123.6	4	0/0/4
112DLH24	1375	1070	2063	139.1	4	0/0/4
120DLH25	1517	1287	2276	147.1	4	0/0/4
145' LENGTH						
80DLH15	283	147	425	39.8	11	0/0/5
80DLH16	336	172	504	44.8	9	0/0/5
88DLH16	363	210	545	47.4	9	0/0/5
88DLH17	403	234	605	52.3	11	0/0/5
88DLH18	463	267	695	58	11	0/0/5
104DLH18	512	375	768	60	0	0/0/5

ECONOMICAL JOIST GUIDE

JOIST DESIG.	TOTAL LOAD (ASD)	LOAD for L/360 DEFL.	TOTAL LOAD (LRFD)	JOIST WEIGHT (lbs/ft)	MAX CHORD WIDTH (IN)	BRIDG. (H/X/EX)
145' LENGTH (continued)						
88DLH19	534	302	801	65.1	11	0/0/5
104DLH19	622	426	933	68.1	0	0/0/5
112DLH19	635	486	953	70.3	4	0/0/5
96DLH20	662	409	993	73.5	13	0/0/5
104DLH20	714	483	1071	76.3	0	0/0/5
120DLH21	850	695	1275	91.8	4	0/0/4
104DLH21	881	593	1322	93.3	0	0/0/4
96DLH22	957	584	1436	104.9	13	0/0/4
104DLH22	999	689	1499	107.4	0	0/0/4
112DLH22	1016	787	1524	109.2	4	0/0/4
104DLH23	1096	721	1644	114.4	0	0/0/4
112DLH23	1120	823	1680	117	4	0/0/4
112DLH24	1327	997	1991	131.8	4	0/0/4
120DLH25	1465	1200	2198	150	4	0/0/4
150' LENGTH						
80DLH15	265	133	398	39.8	11	0/0/6
80DLH16	313	155	470	45.3	9	0/0/5
88DLH16	340	190	510	46.9	9	0/0/5
88DLH17	376	211	564	51.4	11	0/0/5
96DLH17	410	252	615	54	9	0/0/5
88DLH18	432	241	648	57.6	11	0/0/5
104DLH18	478	339	717	59.2	0	0/0/5
88DLH19	499	273	749	64.6	11	0/0/5
104DLH19	582	385	873	67.5	0	0/0/5
112DLH19	608	448	912	69.8	4	0/0/5
96DLH20	618	370	927	73.1	13	0/0/5
104DLH20	670	436	1005	75.2	0	0/0/5
112DLH20	695	507	1043	77.5	4	0/0/5
96DLH21	776	454	1164	90.5	13	0/0/4
120DLH21	822	649	1233	92.8	4	0/0/4
112DLH21	869	625	1304	94.4	4	0/0/4
120DLH22	942	755	1413	102.2	4	0/0/4
112DLH22	978	726	1467	108.9	4	0/0/4
120DLH23	1042	789	1563	116.5	4	0/0/4
120DLH24	1236	957	1854	139	4	0/0/4
112DLH24	1277	920	1916	136	4	0/0/4
120DLH25	1416	1121	2124	154.5	4	0/0/4
155' LENGTH						
80DLH15	247	120	371	42.3	11	0/0/6
80DLH16	293	141	440	47.7	11	0/0/6
88DLH16	318	172	477	49.4	11	0/0/6
88DLH17	352	191	528	53.3	11	0/0/6
96DLH17	385	229	578	55.7	11	0/0/6

JOIST DESIG.	TOTAL LOAD (ASD)	LOAD for L/360 DEFL.	TOTAL LOAD (LRFD)	JOIST WEIGHT (lbs/ft)	MAX CHORD WIDTH (IN)	BRIDG. (H/X/EX)
155' LENGTH (continued)						
88DLH18	404	218	606	58.9	11	0/0/5
96DLH18	435	261	653	61.1	11	0/0/5
88DLH19	467	248	701	64.6	11	0/0/5
104DLH19	546	349	819	67.7	0	0/0/5
112DLH19	571	406	857	69.5	4	0/0/5
104DLH20	629	395	944	75.3	0	0/0/5
88DLH21	666	344	999	87.6	11	0/0/5
120DLH21	795	608	1193	90.7	4	0/0/5
104DLH22	893	564	1340	105	0	0/0/5
104DLH23	956	590	1434	112.2	0	0/0/5
120DLH23	1009	739	1514	111.4	4	0/0/5
112DLH23	1023	688	1535	115.9	4	0/0/5
120DLH24	1196	896	1794	132.4	4	0/0/5
112DLH24	1212	834	1818	135	4	0/0/5
120DLH25	1370	1050	2055	155	4	0/0/5
160' LENGTH						
80DLH15	231	109	347	42.4	11	0/0/6
80DLH16	275	128	413	47.4	11	0/0/6
88DLH16	299	156	449	49.3	11	0/0/6
88DLH17	330	173	495	53	11	0/0/6
96DLH17	362	208	543	55.6	11	0/0/6
88DLH18	379	199	569	58.6	11	0/0/6
104DLH18	423	279	635	60.1	0	0/0/6
88DLH19	438	225	657	64.4	11	0/0/6
104DLH19	513	317	770	67	0	0/0/6
112DLH19	537	369	806	69.5	4	0/0/6
104DLH20	591	359	887	74.6	0	0/0/6
112DLH20	618	418	927	76.6	4	0/0/6
112DLH21	767	514	1151	93.2	4	0/0/5
104DLH22	841	513	1262	105	0	0/0/5
112DLH22	880	598	1320	106.3	4	0/0/5
120DLH23	977	693	1466	116.4	4	0/0/5
120DLH24	1159	841	1739	132.1	4	0/0/5
120DLH25	1328	985	1992	161.8	4	0/0/5
165' LENGTH						
88DLH16	281	143	422	49.5	11	0/0/6
88DLH17	310	159	465	52.9	11	0/0/6
88DLH18	356	181	534	58.3	11	0/0/6
104DLH18	400	255	600	60.4	0	0/0/6
88DLH19	411	205	617	65.2	11	0/0/6
104DLH19	485	289	728	67.9	0	0/0/6
96DLH20	510	277	765	73.6	13	0/0/6
112DLH20	582	381	873	76.3	4	0/0/6

JOIST DESIG.	TOTAL LOAD (ASD)	LOAD for L/360 DEFL.	TOTAL LOAD (LRFD)	JOIST WEIGHT (lbs/ft)	MAX CHORD WIDTH (IN)	BRIDG. (H/X/EX)
165' LENGTH (continued)						
120DLH20	601	435	902	78.3	4	0/0/6
112DLH21	722	469	1083	92.7	4	0/0/5
120DLH21	747	536	1121	94.6	4	0/0/5
112DLH22	833	545	1250	105.5	4	0/0/5
120DLH22	856	624	1284	108.7	4	0/0/5
120DLH23	947	652	1421	116.5	4	0/0/5
112DLH24	1087	691	1631	132.5	4	0/0/5
120DLH24	1124	791	1686	136.3	4	0/0/5
120DLH25	1287	926	1931	162.1	4	0/0/5
170' LENGTH						
88DLH16	265	130	398	49.7	11	0/0/6
88DLH17	292	146	438	53.5	11	0/0/6
88DLH18	335	165	503	58.8	11	0/0/6
104DLH18	378	233	567	61.3	0	0/0/6
96DLH19	424	224	636	65.3	13	0/0/6
104DLH19	457	265	686	67.5	0	0/0/6
96DLH20	481	254	722	72.7	13	0/0/6
112DLH20	549	348	824	75.9	4	0/0/6
96DLH21	605	312	908	89	13	0/0/5
104DLH21	647	368	971	91.3	0	0/0/5
96DLH22	702	362	1053	103.9	13	0/0/5
104DLH22	747	428	1121	105.9	0	0/0/5
104DLH23	795	447	1193	112.2	0	0/0/5
120DLH23	907	601	1361	115.5	4	0/0/5
112DLH24	1026	632	1539	132.5	4	0/0/5
120DLH24	1073	728	1610	135.4	4	0/0/5
120DLH25	1231	853	1847	161.6	4	0/0/5
175' LENGTH						
88DLH16	251	119	377	50.6	11	0/0/6
88DLH17	274	133	411	53.8	11	0/0/6
96DLH17	302	159	453	59.1	11	0/0/6
104DLH18	358	213	537	61.7	0	0/0/6
96DLH19	401	206	602	65.4	13	0/0/6
112DLH19	451	281	677	69.2	4	0/0/6
104DLH20	493	274	740	74.8	0	0/0/6
112DLH20	520	319	780	77	4	0/0/6
96DLH21	571	286	857	88.5	13	0/0/5
104DLH21	611	337	917	91.1	0	0/0/5
112DLH21	644	393	966	92.7	4	0/0/5
96DLH22	664	332	996	103.4	13	0/0/5
120DLH22	779	526	1169	108	4	0/0/5
120DLH23	858	551	1287	115.9	4	0/0/5
112DLH24	970	579	1455	132.1	4	0/0/5

JOIST DESIG.	TOTAL LOAD (ASD)	LOAD for L/360 DEFL.	TOTAL LOAD (LRFD)	JOIST WEIGHT (lbs/ft)	MAX CHORD WIDTH (IN)	BRIDG. (H/X/EX)
175' LENGTH (continued)						
120DLH24	1015	667	1523	134.6	4	0/0/5
120DLH25	1165	782	1748	160.3	4	0/0/5
180' LENGTH						
96DLH17	284	146	426	56.3	11	0/0/7
104DLH18	339	195	509	61.1	0	0/0/6
104DLH19	409	222	614	67.5	0	0/0/6
112DLH19	428	259	642	68.9	4	0/0/6
104DLH20	465	251	698	74.5	0	0/0/6
120DLH20	510	338	765	77.1	4	0/0/6
104DLH21	578	307	867	90.1	0	0/0/5
120DLH21	639	416	959	92.9	4	0/0/5
104DLH22	668	359	1002	105	0	0/0/5
112DLH22	705	419	1058	106.7	4	0/0/5
112DLH23	765	439	1148	113.9	4	0/0/5
120DLH24	961	613	1442	133.5	4	0/0/5
120DLH25	1104	718	1656	158.9	4	0/0/5
185' LENGTH						
96DLH17	269	134	404	61.7	13	0/0/7
104DLH18	321	180	482	66.4	0	0/0/7
104DLH19	387	204	581	72.5	0	0/0/7
112DLH19	406	238	609	74.2	4	0/0/7
104DLH20	440	232	660	78.8	0	0/0/7
112DLH20	468	270	702	81	4	0/0/7
120DLH20	484	311	726	86.6	4	0/0/7
96DLH21	510	242	765	92.1	13	0/0/6
112DLH21	578	333	867	95	4	0/0/6
104DLH22	633	331	950	105.2	0	0/0/6
112DLH22	668	386	1002	107	4	0/0/6
112DLH23	724	404	1086	114	4	0/0/6
120DLH24	912	565	1368	132.9	4	0/0/6
120DLH25	1047	661	1571	157.7	4	0/0/6
190' LENGTH						
96DLH17	255	124	383	62.2	13	0/0/7
96DLH18	292	141	438	66.7	13	0/0/7
104DLH18	305	167	458	67	0	0/0/7
96DLH19	338	161	507	71.6	13	0/0/7
112DLH19	386	220	579	74.3	4	0/0/7
104DLH20	417	214	626	78.4	0	0/0/7
112DLH20	445	249	668	80.8	4	0/0/7
120DLH20	461	287	692	82.5	4	0/0/7
96DLH21	482	224	723	91.8	13	0/0/6
112DLH21	549	306	824	94.7	4	0/0/6
120DLH21	576	353	864	96.5	4	0/0/6

ECONOMICAL JOIST GUIDE

JOIST DESIG.	TOTAL LOAD (ASD)	LOAD for L/360 DEFL.	TOTAL LOAD (LRFD)	JOIST WEIGHT (lbs/ft)	MAX CHORD WIDTH (IN)	BRIDG. (H/X/EX)
190' LENGTH (continued)						
104DLH22	600	306	900	105	0	0/0/6
112DLH22	635	356	953	106.1	4	0/0/6
120DLH22	665	411	998	108.6	4	0/0/6
120DLH23	733	430	1100	115	4	0/0/6
112DLH24	828	451	1242	131.3	4	0/0/6
120DLH24	867	521	1301	134.2	4	0/0/6
120DLH25	994	610	1491	158.9	4	0/0/6
195' LENGTH						
104DLH18	290	154	435	69.8	0	0/0/7
104DLH19	350	175	525	72.7	0	0/0/7
112DLH20	422	231	633	80.5	4	0/0/7
120DLH20	438	265	657	82.9	4	0/0/7
104DLH21	493	244	740	93.3	0	0/0/6
120DLH21	548	326	822	96.5	4	0/0/6
112DLH22	602	329	903	105.4	4	0/0/6
112DLH23	651	345	977	111.6	4	0/0/6
120DLH23	697	397	1046	115.6	4	0/0/6
112DLH24	786	418	1179	130.7	4	0/0/6
120DLH24	824	482	1236	133.9	4	0/0/6
120DLH25	946	564	1419	158.7	4	0/0/6
200' LENGTH						
104DLH18	276	142	414	69.7	0	0/0/7
104DLH19	332	162	498	72.7	0	0/0/7
112DLH20	402	213	603	79.9	4	0/0/7
120DLH20	418	246	627	82.4	4	0/0/7
104DLH21	469	226	704	93.1	0	0/0/6
120DLH21	521	303	782	96.8	4	0/0/6
112DLH22	574	306	861	105.1	4	0/0/6
120DLH22	602	352	903	107.4	4	0/0/6
120DLH23	664	369	996	114.1	4	0/0/6
112DLH24	748	387	1122	130.4	4	0/0/6
120DLH24	785	447	1178	132.8	4	0/0/6
120DLH25	900	523	1350	157.9	4	0/0/6
205' LENGTH						
104DLH18	263	132	395	69.5	0	0/0/7
104DLH19	315	150	473	72.5	0	0/0/7
104DLH20	357	170	536	78.8	0	0/0/7
120DLH20	399	228	599	84.4	4	0/0/7
104DLH21	446	209	669	93	0	0/0/6
120DLH21	497	281	746	95.8	4	0/0/6
104DLH22	516	244	774	105.5	0	0/0/6
112DLH22	546	283	819	104.8	4	0/0/6
120DLH23	632	341	948	113.9	4	0/0/6

JOIST DESIG.	TOTAL LOAD (ASD)	LOAD for L/360 DEFL.	TOTAL LOAD (LRFD)	JOIST WEIGHT (lbs/ft)	MAX CHORD WIDTH (IN)	BRIDG. (H/X/EX)
205' LENGTH (continued)						
112DLH24	713	359	1070	129.9	4	0/0/6
120DLH24	748	414	1122	133.4	4	0/0/6
120DLH25	858	485	1287	158.4	4	0/0/6
210' LENGTH						
112DLH19	317	162	476	77.7	4	0/0/8
112DLH20	365	184	548	83.2	4	0/0/8
120DLH20	380	212	570	85	4	0/0/8
112DLH21	450	227	675	96.1	4	0/0/6
112DLH23	560	276	840	107.5	4	0/0/6
120DLH23	602	318	903	113.4	4	0/0/6
120DLH24	713	386	1070	132	4	0/0/6
120DLH25	819	452	1229	156.8	4	0/0/6
215' LENGTH						
112DLH19	303	151	455	79.8	4	0/0/8
112DLH20	348	171	522	85.3	4	0/0/8
120DLH20	362	198	543	87.1	4	0/0/8
112DLH21	430	211	645	98.3	4	0/0/7
112DLH22	497	246	746	108.4	4	0/0/7
120DLH23	574	296	861	114.9	4	0/0/7
120DLH24	681	359	1022	132.4	4	0/0/7
120DLH25	782	421	1173	155.6	4	0/0/7
220' LENGTH						
112DLH19	289	142	434	71.3	4	0/0/8
112DLH20	333	160	500	77.6	4	0/0/8
120DLH20	347	185	521	84.9	4	0/0/8
112DLH21	411	198	617	92.5	4	0/0/7
112DLH23	509	239	764	105.5	4	0/0/7
120DLH23	548	276	822	111.5	4	0/0/7
112DLH24	619	291	929	131.3	4	0/0/7
120DLH25	748	393	1122	155	4	0/0/7
225' LENGTH						
120DLH20	332	172	498	79.8	4	0/0/8
120DLH21	414	212	621	94.2	4	0/0/7
120DLH22	477	247	716	105.5	4	0/0/7
120DLH23	524	258	786	111.8	4	0/0/7
120DLH24	623	313	935	132.6	4	0/0/7
120DLH25	715	367	1073	156.5	4	0/0/7

JOIST DESIG.	TOTAL LOAD (ASD)	LOAD for L/360 DEFL.	TOTAL LOAD (LRFD)	JOIST WEIGHT (lbs/ft)	MAX CHORD WIDTH (IN)	BRIDG. (H/X/EX)
230' LENGTH						
120DLH20	318	161	477	89.4	4	0/0/8
120DLH21	396	199	594	93.8	4	0/0/7
120DLH22	457	231	686	105.2	4	0/0/7
120DLH23	501	241	752	111.5	4	0/0/7
120DLH24	596	293	894	132.2	4	0/0/7
120DLH25	684	344	1026	156	4	0/0/7
235' LENGTH						
120DLH20	305	151	458	90.4	4	0/0/9
120DLH21	379	186	569	94.6	4	0/0/7
120DLH22	438	217	657	104.8	4	0/0/7
120DLH23	479	227	719	111.7	4	0/0/7
120DLH24	571	275	857	131.6	4	0/0/7
120DLH25	656	322	984	155	4	0/0/7
240' LENGTH						
120DLH20	292	142	438	90.7	4	0/0/9
120DLH21	363	175	545	94.7	4	0/0/7
120DLH22	420	204	630	105.3	4	0/0/7
120DLH23	459	213	689	111.9	4	0/0/7
120DLH24	548	258	822	132	4	0/0/7
120DLH25	628	302	942	155.5	4	0/0/7

Steel Joist Institute – SJI COSP - 2020

CODE OF STANDARD PRACTICE
FOR STEEL JOISTS AND JOIST GIRDERS

Adopted by the Steel Joist Institute April 7, 1931
Revised to Nov. 10, 2014 - Effective Jan.1, 2015

SECTION 1.
GENERAL

1.1 SCOPE

The practices and customs set forth herein are in accordance with good engineering practice, tend to ensure safety in steel joist and Joist Girder construction, and are standard within the industry. There shall be no conflict between this code and any legal building regulation. This code shall only supplement and amplify such laws. Unless specific provisions to the contrary are made in a contract for the purchase of steel joists or Joist Girders, this code is understood to govern the interpretation of such a contract.

1.2 APPLICATION

This Code of Standard Practice is to govern as a standard unless otherwise covered in the architects' and engineers' plans and specifications.

1.3 DEFINITIONS

Add-Load. A single vertical concentrated load that occurs at any one panel point along the joist chord. This load is in addition to any other gravity loads specified.

Bend-Check Load. A vertical concentrated load used to design the joist chord for the additional bending stresses resulting from this load being applied at any location between the joist panel points. This load shall already be accounted for in the specified joist designation load, uniform load, or Add-Load and is used only for the additional bending check in the chord and does not contribute to the overall axial forces within the joist. An ideal use of this is for incidental loads which have already been accounted for in the design loading but may induce additional bending stress due to this load occurring at any location along the chord.

Buyer. The entity that has agreed to purchase Material from the manufacturer and has also agreed to the terms of sale.

Erector. The entity that is responsible for the safe and proper erection of the materials in accordance with all applicable codes and regulations.

Material. Steel joists, Joist Girders and accessories as provided by the seller.

Owner. The entity that is identified as such in the contract documents.

Placement Plans. Drawings that are prepared depicting the interpretation of the contract document's requirements for the Material to be supplied by the Seller. These floor or roof plans are approved by the Specifying Professional, Buyer, or Owner for conformance with the design requirements. The Seller uses the information contained on these drawings for final material design. A unique piece mark number is typically shown for the individual placement of the steel joists, Joist Girders and accessories along with sections that describe the end bearing conditions and minimum attachment required so that material is placed in the proper location in the field.

Seller. A company certified by the Steel Joist Institute engaged in the manufacture and distribution of steel joists, Joist Girders and accessories.

Specifying Professional. The licensed professional who is responsible for sealing the building contract documents, that indicates that he or she has performed or supervised the analysis, design and document preparation for the structure and has knowledge of the load-carrying structural system.

Structural Drawings. The graphic or pictorial portions of the contract documents showing the design, location and dimensions of the work. These documents generally include plans, elevations, sections, details, connections, all loads, schedules, diagrams and notes.

1.4 DESIGN

In the absence of ordinances or specifications to the contrary, all designs prepared by the Specifying Professional shall be in accordance with the Steel Joist Institute Standard Specifications of latest adoption.

1.5 RESPONSIBILITY FOR DESIGN AND ERECTION

When material requirements are specified, the seller shall assume no responsibility other than to furnish the items listed in Section 5.2(a). When material requirements are not specified, the seller shall furnish the items listed in Section 5.2(a) in accordance with Steel Joist Institute Standard Specifications of latest adoption, and this code. Pertinent design information shall be provided to the seller as stipulated in Section 6.1. The seller shall identify material by showing size and type. In no case shall the seller assume any responsibility for the erection of the item furnished.

1.6 PERFORMANCE TESTS FOR OPEN WEB STEEL JOIST CONSTRUCTION

When a performance test on a joist is required, the following criteria shall be used:

a) The performance test load shall be the maximum factored uniformly distributed downward design load for the selected joist.

   (1) The TOTAL safe factored uniformly distributed load-carrying capacity tabulated in the Standard LRFD Load Table for the specific joist designation and span.

   (2) For a joist with factored loading conditions other than those found in the Standard LRFD Load Table, this is the LRFD Load Combination resulting in the highest uniformly distributed downward factored design load.

   (3) For a joist with loading conditions other than those found in the Standard ASD Load Table, this is the ASD Load Combination resulting in the highest uniformly distributed downward design load multiplied times 1.50.

b) Joist self-weight and the weight of all test materials shall be included in the calculation of applied performance test loading as appropriate for the joist during testing.

c) Loading shall be uniformly distributed across the full length of the joist top chord, and the load application shall maintain uniform distribution throughout the test. At any stage during the application of the test loading, the test load shall not be distributed in such a manner as to result in any joist component being subjected to a higher proportion of force than intended by the joist design.

d) If tested as a panel assembly, the joists shall be tested in pairs with deck, deck attachments, and bridging installed per the approved joist and deck Placement Plans. All bottom chord horizontal bridging rows shall be terminated by bracing back to the top chord of the adjacent joist or by a lateral restraint system which does not inhibit the vertical deflection of the test joist.

e) If tested singly in a load test machine apparatus, the joist chords shall be braced to prevent lateral movement, without inhibiting vertical displacement. The joist top chord shall have lateral braces located at equal spacing of no more than 36 inches (914 mm) on center. The joist bottom chord shall have lateral braces located, at a minimum, per the bottom chord bridging locations shown on the approved joist placement plan.

f) The performance test loading shall be applied at a rate of no greater than 25 plf per minute and shall be sustained for no less than 15 minutes. After the maximum test load has been removed for a minimum of 10 minutes, the remaining vertical displacement at midspan shall not exceed 20% of the vertical midspan deflection sustained under the full performance test load.

g) All costs associated with such testing shall be borne by the purchaser.

h) Joists that have been designed and manufactured and have satisfied the above performance test criteria shall be considered to satisfy the intent of the Steel Joist Institute Standard Specifications, and shall be considered acceptable for use in construction. No further proof of strength of individual joist components or connections is required.

SECTION 2.
JOISTS, JOIST GIRDERS, AND ACCESSORIES

2.1 STEEL JOISTS AND JOIST GIRDERS

Steel joists and Joist Girders shall carry the designations and meet the requirements of the Steel Joist Institute Standard Specifications of latest adoption.

K-Series, LH-Series, DLH-Series joists, and Joist Girders are furnished either underslung or square ended, with top chords either parallel, pitched one way or pitched two ways. It is not recommended that any Joist Girder, or any DLH-Series joist that exceeds 72 inches (1829 mm) in depth and has a span greater than 80 feet (24384 mm), be used in a bottom bearing configuration.

The steel joist or Joist Girder designation depth or nominal depth shall be the depth at midspan, except for double pitched joists which shall be the depth at the ridge. K-Series, LH-Series, DLH-Series joists, and Joist Girders shall be permitted to have either parallel chords or a top chord pitch of up to 1/2 inch per foot (1:24).

2.2 BEARING SEATS

Underslung types are furnished with minimum end bearing depths as shown in Table 2.2-1. A standard maximum joist bearing seat width (perpendicular to the joist length) is provided. This width shall be permitted to vary based on the joist design and joist manufacturer.

Steel Joist Institute – SJI COSP - 2020

TABLE 2.2-1

STANDARD END BEARING SEAT DEPTH AND STANDARD MAXIMUM SEAT WIDTH		
JOIST SECTION NUMBER[1]	**MINIMUM BEARING DEPTH**	**MAXIMUM SEAT WIDTH[2]**
K1-12	2 ½" (64 mm)	6" (152 mm)
LH02-06	5" (127 mm)	6" (152 mm)
LH07-17, DLH10-17	5" (127 mm)	8" (203 mm)
JG	7 ½" (191 mm)	8" (203 mm)
LH/DLH18-25, JG[3]	7 ½" (191 mm)	13" (330 mm)
JG[4]	10" (254 mm)	13" (330 mm)

(1) **Last two digits of joist designation shown in Load Table.**

(2) **THE SEAT WIDTH MAY VARY BASED ON DESIGN.**

(3) **Joist Girders** with a self weight greater than 50 plf (0.73 kN/m).

(4) **Joist Girders** with a self weight equal to or greater than 150 plf (2.19 kN/m).

Joist Girder bearing seat widths vary depending on the Joist Girder size and shall be permitted to be up to 13" (330 mm) wide. The supporting structural member shall be made wide enough to accommodate the seat widths.

Where steel joists or Joist Girders are sloped, sloped end bearings may be provided where the slope exceeds 1/4 inch per foot (1:48). When sloped end bearings are required, the seat depths shall be adjusted to maintain the standard height at the shallow end of the sloped bearing. For Open Web Steel Joists, K-Series, bearing ends shall be permitted to not be beveled for slopes of 1/4 inch or less per foot (1:48). For sloped joist bearing seats refer to the sloped seat depth requirements of Table 2.2-2 and Table 2.2-3.

Steel Joist Institute – SJI COSP - 2020

TABLE 2.2-2

SLOPED SEAT REQUIRMENTS FOR SLOPES 3/8":12 AND GREATER
K-SERIES OPEN WEB STEEL JOISTS

LOW END W/OUT TOP CHORD EXTENSIONS

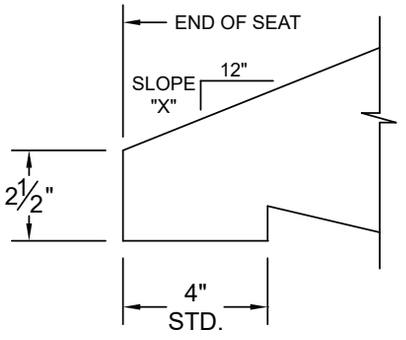

HIGH END W/OUT TOP CHORD EXTENSIONS

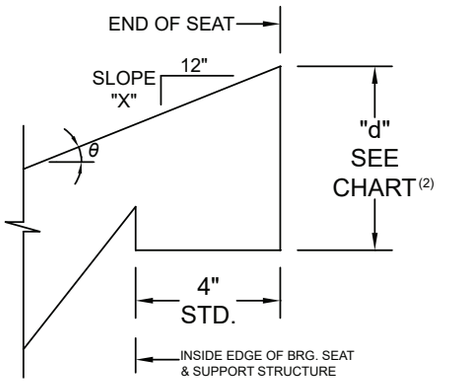

LOW END W/ TOP CHORD EXTENSIONS

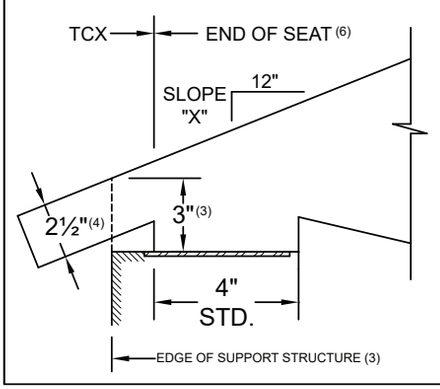

HIGH END W/ TOP CHORD EXTENSIONS

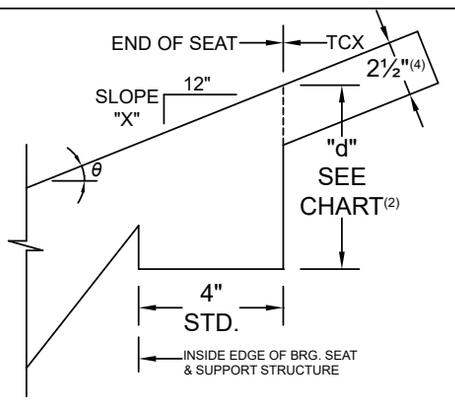

SLOPE "X":12	MINIMUM HIGH END SEAT DEPTH "d"
3/8	3 1/2
1/2	3 1/2
1	3 1/2
1 1/2	4
2	4
2 1/2	4
3	4 1/2
3 1/2	4 1/2
4	4 1/2
4 1/2	5
5	5
5 1/2	5 1/2
6	5 1/2
SEE NOTE (2) FOR SLOPE RATES GREATER THAN 6:12	

Notes:
(1) Depths shown are the minimum required for manufacturing of sloped seats. Depths may vary depending on actual bearing conditions.
(2) $d = 1/2 + 2.5/\cos\theta + 4\tan\theta$ (Rounded up to the nearest 1/2".)
(3) Clearance must be checked at outer edge of support. Increase bearing depths as required to allow passage of 2 1/2" deep extension.
(4) If extension depth greater than 2 1/2" is required, increase bearing depths accordingly.
(5) If slope is 1/4 : 12 or less, sloped seats are not required.
(6) Required bearing seat depth is determined at END OF SEAT.
(7) Also refer to SJI Specification 5.4 for special considerations of joist end reaction location.

TABLE 2.2-3

SLOPED SEAT REQUIRMENTS FOR SLOPES 3/8":12 AND GREATER
LH- AND DLH-SERIES OPEN WEB STEEL JOISTS

LOW END W/OUT TOP CHORD EXTENSIONS	HIGH END W/OUT TOP CHORD EXTENSIONS	SLOPE "X" : 12	MINIMUM HIGH END SEAT DEPTH "d"
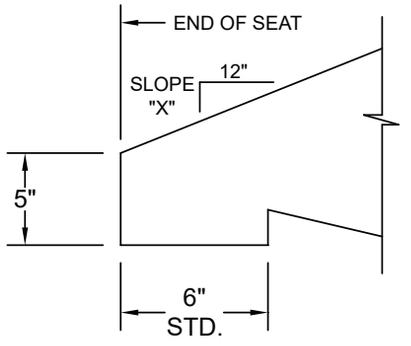	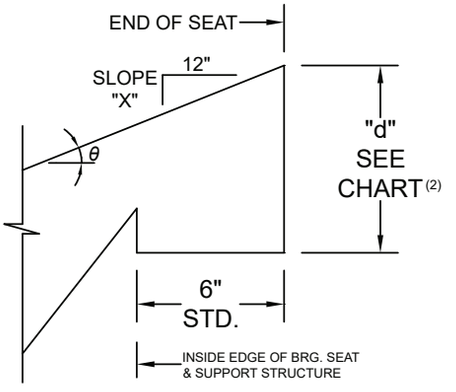	3/8	6
		1/2	6
		1	6 1/2
		1 1/2	6 1/2
		2	7
		2 1/2	7
		3	7 1/2
LOW END W/ TOP CHORD EXTENSIONS	**HIGH END W/ TOP CHORD EXTENSIONS**	3 1/2	7 1/2
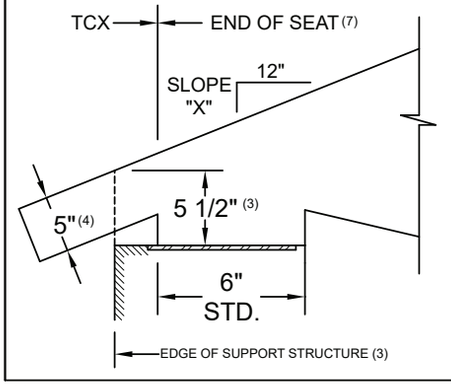	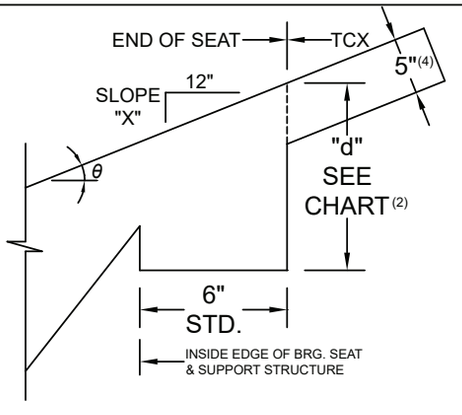	4	8
		4 1/2	8 1/2
		5	8 1/2
		5 1/2	9
		6	9 1/2
		SEE NOTE (2) FOR SLOPE RATES GREATER THAN 6:12	

Notes:
(1) Depths shown are the minimum required for manufacturing of sloped seats. Depth may vary depending on actual bearing condition.
(2) $d = 1/2 + 5 / \cos\theta + 6 \tan\theta$
(3) Clearance must be checked at outer edge of support. Increase bearing seat depth as required to allow passage of 5" deep extension.
(4) If extension depth greater than 5" is required, increase bearing depths accordingly.
(5) Add 2 1/2" to seat depth at 18 thru 25 chord section numbers. Consult with joist manufacturer for information when TCXs are present.
(6) If slope is 1/4 : 12 or less, sloped seats may not required.
(7) Required bearing seat depth shall be determined at END OF SEAT.
(8) Also refer to SJI Specification 5.4 for special considerations of joist end reaction location.

Steel Joist Institute – SJI COSP - 2020

2.3 JOIST LOCATION AND SPACING

The uniform loads as shown in the Standard Specifications Load Tables & Weight Tables of latest adoption shall be used to determine maximum joist spacing.

Where sidewalls, wall beams or tie beams are capable of supporting the floor slab or roof deck, the first adjacent joists should be placed one full space from these members. Joists are provided with camber and may have a significant difference in elevation with respect to the adjacent structure because of this camber. This difference in elevation shall be given consideration when locating the first joist adjacent to a side wall, wall beam, or tie beam.

K-Series Joists should be placed no closer than 6 inches (152 mm) to adjacent walls or structural members. LH-Series and DLH-Series Joists should be placed no closer than 12 inches (305 mm) to adjacent walls or structural members. Where partition walls are supported by parallel floor joists, there shall be at least one joist provided under each such partition, and more than one such joist shall be provided if necessary to safely support the weight of such partition and the adjacent floor. When partitions occur perpendicular to the joists, they shall be treated as concentrated loads on the supporting joists.

2.4 SPECIFYING DESIGN LOADS

Neither the Steel Joist Institute nor the joist manufacturer establishes the loading requirements for which structures are designed.

The *specifying professional* shall provide the nominal loads and load combinations as stipulated by the applicable code under which the structure is designed and shall provide the design basis (ASD or LRFD).

The *specifying professional* shall calculate and provide the magnitude and location of ALL JOIST and JOIST GIRDER LOADS. This includes all special loads (drift loads, mechanical units, net uplift, axial loads, moments, structural bracing loads, or other applied loads) which are to be incorporated into the joist or Joist Girder design. For Joist Girders, reactions from supported members shall be clearly denoted as point loads on the Joist Girder. When necessary to clearly convey the information, a load diagram or load schedule shall be provided.

The *specifying professional* shall give due consideration to the following loads and load effects:

- Ponded rain water.
- Accumulation of snow in the vicinity of obstructions such as penthouses, signs, parapets, adjacent buildings, etc.
- Wind and seismic forces. Indicate wind NET uplift in pounds per square foot (Pascals) and any other wind or seismic forces required to be incorporated into the joist or Joist Girder design. If applicable, make clear if loads specified are reduced (i.e. for ASD 0.6W=, 0.7E=) and provide any pertinent S_{DS} values. Connection details shall be designed by the *specifying professional*.
- Movable partitions. Convey any special deflection requirements as well as any stacked loading conditions.
- Type and magnitude of end moments and/or axial forces at the joist and Joist Girder end supports shall be shown on the Structural Drawings. For moment resisting joists or Joist Girders framing at or near the top of a column, due consideration shall be given to extend the column length to allow a plate type connection between the top of the joist or Joist Girder top chord and the column.
  Avoid transferring joist or Joist Girder end moments and axial forces through the bearing seat connection.
  A note shall be provided on the structural drawings stating that all moment resisting joists shall have all dead loads applied to the joist before the bottom chord struts are welded to the supporting connection whenever the design moments provided do not include dead load.
  The top and bottom chord moment connection details shall be designed by the *specifying professional*. The joist designer shall furnish the *specifying professional* with the joist detail information if requested. Additional design tools and details are available at the Steel Joist Institute's website, www.steeljoist.org.
- Joist chords shall not carry out-of-plane or torsional loads, such as from horizontal components of concentrated loads applied to laterally sloped joists, braces, screen walls, posts, etc. The structural contract drawings shall show the required structural bracing to resolve these forces.

Where concentrated loads occur, the magnitude and location of these concentrated loads shall be shown on the structural drawings when, in the opinion of the *specifying professional*, they shall require consideration by the joist manufacturer. For nominal concentrated loads, which have been accounted for in the specified uniform design loads, a "strut" to transfer the load to a panel point on the opposite chord shall not be required provided that the sum of the concentrated loads within a chord panel does not exceed 100 pounds (445 N) and the attachments are concentric to the chord. When exact dimensional locations for concentrated loads which do not meet the above criteria are provided by the *specifying professional,* the joist shall be designed for the loads and load locations provided without the need for additional field applied web members at the specified locations.

(a) Specifying Joist Design Loads

The Steel Joist Institute Load Tables are based on uniform loading conditions and are valid for use in selecting joist sizes for gravity loads that can be expressed in terms of "pounds per linear foot" (kiloNewtons per meter) of joist.

For other loads, the Specifying Professional shall use one of the five options described below that allows:

- The estimator to price the joists.
- The joist manufacturer to design the joists in accordance with the Standard Specifications of latest adoption.
- The owner to obtain the most economical joists.

Option 1: Select a joist designation from the Standard Load Table (or specify a joist type using a uniform load in the designation) which has been determined to be adequate for all design loads. The shear and moment envelope resulting from the selected uniform load shall meet the actual shear and moment requirements. Thus, this option alone may not be adequate if large concentrated loads need to be designed for.

Option 2: Select a joist designation from the Standard Load Table (or specify a joist type using a uniform load in the designation) and also provide the load and location of any additional loads on the structural plan with a note "Joist manufacturer shall design joists for additional loads at locations shown." This option works well for a few added loads per joist with known magnitude and locations.

Option 3: For additional point loads with exact locations not known along the joist or for incidental loads, any one, or both, of the following can be specified on the structural plan in addition to option 1 or 2 above:

a) "**Design for a (__) lb. concentrated load located at any one panel point along the joist**". This is referred to as an *Add-Load*.

b) "**Design for additional bending stresses resulting from a (__) lb. concentrated load located at any location along (____) chord**". This is referred to as a *Bend-Check* and can be specified on the **top** chord, **bottom** chord, or **both top and bottom** chords. This can be used when the concentrated load is already accounted for in the joist designation, uniform load, or specified *Add-Load* yet this specified amount of load shall be permitted to also be located at any location between panel points. The additional bending stresses as a result of this load are then designed for. A *Bend-Check* load shall not exceed (*Add-Load* + 400 lbs.) A *Bend-Check* load can be specified by itself without an *Add-Load*.

c) Both (a) and (b) above can be specified with equal concentrated loads for each; or simply denote **"Design joist for a (__) lb. concentrated load at any location along the (___) chord."**

Example uses:

- *Specifying professional* selects a standard joist capable of carrying a 500 lb. RTU. However, the location and exact frame size is not yet known but the frame load shall result in two- 250 lb. point loads at least 5'-0" apart. **Specify a 250 lb. *Bend-Check*.**
- Standard joist specified but not selected for 500 lb. RTU load, location not known. **Specify a 500 lb. *Add-Load* and 250 lb. *Bend-Check*.**
- Standard SJI joist selected to carry collateral load of 3 psf. *Specifying professional* wants bending from 150 lb. incidental loads to also be designed for**. Specify a 150 lb. *Bend-Check*.**

Steel Joist Institute – SJI COSP - 2020

Option 4: Select a KCS joist using moment and end reaction without specifying added loads or diagrams. This option works well for concentrated loads for which exact locations are not known or for multiple loading.

a) Determine the maximum moment.

b) Determine the maximum end reaction (shear).

c) Select the required KCS joist that provides the required moment and end reaction (shear). Note that the top chord end panel is designed for axial load based on the force in the first tension web, that is based on the specified end reaction. A uniform load of 825 plf (12030 N/m) LRFD or 550 plf (8020 N/m) ASD is used to check end panel bending. If the end panel loading exceeds this, reduce the joist spacing or go to Option 5.

d) Specify on the structural drawings that an extra web shall be field applied at all concentrated loads not occurring at panel points.

OPTION 4 - ASD EXAMPLE 1:	**OPTION 4 - LRFD EXAMPLE 1:**
U.S. CUSTOMARY UNITS AND (METRIC UNITS)	**U.S. CUSTOMARY UNITS AND (METRIC UNITS)**
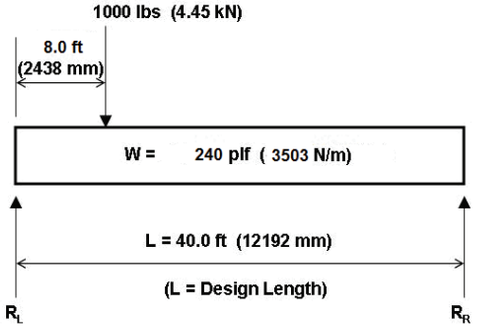	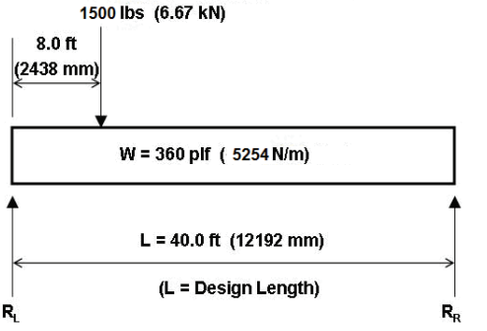
M = 625 k-in. (70.6 kN-m) R_L = 5600 lbs (24.9 kN), R_R = 5000 lbs (22.2 kN) Select a 22KCS3, M = 658 k-in. (74.3 kN-m) R = 6600 lbs (29.3 kN) Bridging section no. 9 for L = 40 ft. (12192 mm) Use 22K9 to determine bridging and stability requirements. Since a standard KCS Joist can be selected from the load table a load diagram is not required.	M = 938 k-in. (105.9 kN-m) R_L = 8400 lbs (37.37 kN), R_R = 7500 lbs (33.36 kN) Select a 22KCS3, M = 987 k-in. (111.5 kN-m) R = 9900 lbs (44.0 kN) Bridging section no. 9 for L = 40 ft. (12192 mm) Use 22K9 to determine bridging and stability requirements. Since a standard KCS Joist can be selected from the load table a load diagram is not required.

Steel Joist Institute – SJI COSP - 2020

OPTION 4 - ASD EXAMPLE 2:	OPTION 4 - LRFD EXAMPLE 2:
U.S. CUSTOMARY UNITS AND (METRIC UNITS)	**U.S. CUSTOMARY UNITS AND (METRIC UNITS)**
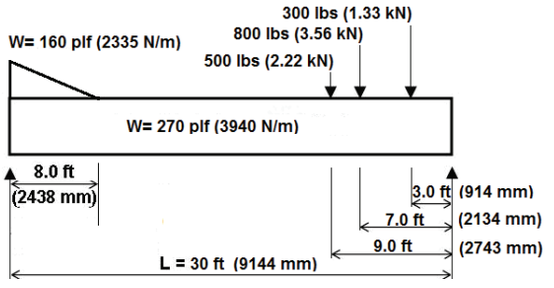	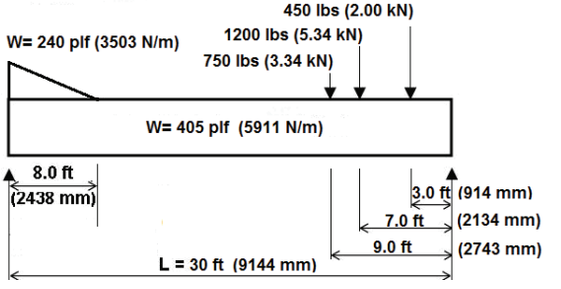
M = 443 k-in. (50.1 kN-m) R_L = 5000 lbs (22.24 kN), R_R = 5340 lbs (23.75 kN) Select a 22KCS2, M = 488 k-in. (55.1 kN-m) R = 5900 lbs (26.2 kN) Bridging section no. 6 for L = 30 ft. (9144 mm) Use 22K6 to determine bridging and stability requirements. Since the maximum uniform load of 430 plf [6275 N/m) (270 plf (3940 N/m) + 160 plf (2335 N/m)] does not exceed the maximum KCS Joist uniform load of 550 plf (8020 N/m) and a standard KCS Joist can be selected from the load table, a load diagram is not required.	M = 664 k-in. (75.03 kN-m) R_L = 7500 lbs (33.36 kN), R_R = 8010 lbs (35.63 kN) Select a 22KCS2, M = 732 k-in. (82.64 kN-m) R = 8850 lbs (39.3 kN) Bridging section no. 6 for L = 30 ft. (9144mm) Use 22K6 to determine bridging and stability requirements. Since the maximum ***factored*** uniform load of 645 plf (9413 N/m) (405 plf (5911 N/m) + 240 plf (3503 N/m)) does not exceed the maximum KCS Joist uniform load of 825 plf (12030 N/m) and a standard KCS Joist can be selected from the load table, a load diagram is not required.

Steel Joist Institute – SJI COSP - 2020

OPTION 4 - ASD EXAMPLE 3:	OPTION 4 - LRFD EXAMPLE 3:
U.S. CUSTOMARY UNITS AND (METRIC UNITS)	**U.S. CUSTOMARY UNITS AND (METRIC UNITS)**
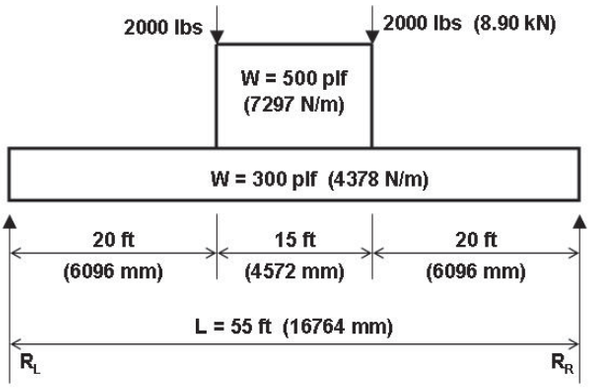	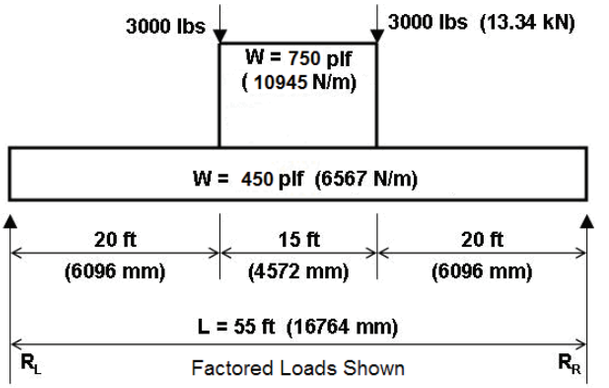
M = 2910 k-in. (328.8 kN-m) $R_L = R_R$ = 14000 lbs (62.28 kN) EXCEEDS CAPACITY OF 30KCS5 (MAXIMUM KCS JOIST) AND EXCEEDS MAXIMUM UNIFORM LOAD OF 550 plf (8027 N/m). **OPTION A:** Use double joists each having a minimum moment capacity, M = 1455 k-in. (164.4 kN-m) and shear capacity, R = 7000 lbs (31.14 kN) and a uniform load of 400 plf (5838 N/m). Select two 28KCS5, M = 1704 k-in. (192.5 kN-m), R = 9200 lbs (40.9 kN). Bridging section no. 12 for L = 55 ft. (16764 mm). Use 28K12 to determine bridging and stability requirements. **OPTION B:** Select a LH-Series Joist. See OPTION 5.	M = 4365 k-in. (493.2 kN-m) $R_L = R_R$ = 21000 lbs (93.41 kN) EXCEEDS CAPACITY OF 30KCS5 (MAXIMUM KCS JOIST AND EXCEEDS MAXIMUM ***FACTORED*** UNIFORM LOAD OF 825 plf (12040 N/m). **OPTION A:** Use double joists each having a minimum moment capacity, M = 2183 k-in. (246.65 kN-m) and shear capacity, R = 10500 lbs (46.71 kN) and a uniform load of 600 plf (8756 N/m). Select two 28KCS5, M = 2556 k-in. (288.7 kN-m), R = 13800 lbs (61.3 kN). Bridging section no. 12 for L = 55 ft. (16764 mm) Use 28K12 to determine bridging and stability requirements. **OPTION B:** Select a LH-Series Joist. See OPTION 5.

Option 5: Specify a SPECIAL joist designation when the joist includes more complex loading or for conditions which need consideration of multiple potentially controlling load combinations.

a) Provide a load diagram and/or enough information on the drawings to clearly define ALL loads.

b) If the loading criteria are too complex to adequately communicate on the drawings or with a simple load diagram, then the *specifying professional* shall provide a load schedule along with the appropriate load combinations. Regardless of where the loads are shown, unfactored design loads broken down by load categories shall be provided in order to design the joists correctly with applicable load combinations.

   Place the designation (e.g. 28K SP or 28LH SP) with the following note: “Joist manufacturer to design joist to support loads as shown.”

Steel Joist Institute – SJI COSP - 2020

OPTION 5 - ASD EXAMPLE:	OPTION 5 - LRFD EXAMPLE:
U.S. CUSTOMARY UNITS AND (METRIC UNITS)	U.S. CUSTOMARY UNITS AND (METRIC UNITS)
Load diagram per ASCE 7 2.4.1(3), D + S	Unfactored Load diagram per ASCE 7 2.3.2(3), 1.2D+1.6S
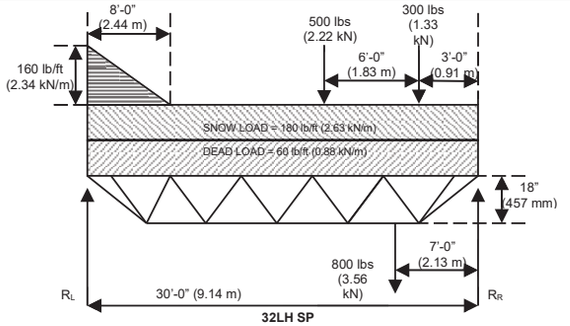 **32LH SP** Joist manufacturer to design joist to support loads as shown above.	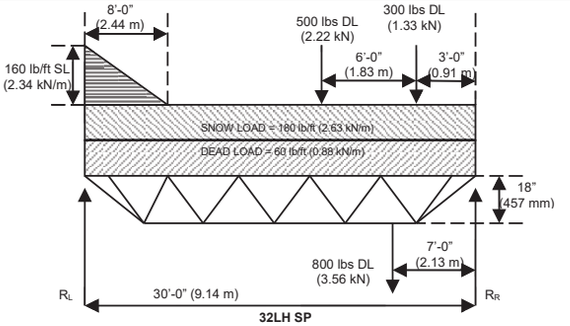 **32LH SP** Joist manufacturer to design joist to support **unfactored** loads as shown above.
PLEASE NOTE THE LOAD COMBINATIONS SHOWN ARE FOR REFERENCE EXAMPLES ONLY.	

CAUTION FOR OPTIONS 1 thru 5 ABOVE:

If a K-Series joist is being specified, the Specifying Professional shall compare the equivalent uniform loads derived from the maximum moment and shear to the uniform loads tabulated in the K-Series Load Table. An equivalent unfactored uniform load in excess of 550 plf (8020 N/m) or a maximum unfactored end reaction exceeding 9200 lbs. (40.9 kN) indicates that the *specifying professiona*l shall use additional joists to reduce the loading or use an LH-Series joist and make provisions for 5 inch (127 mm) deep bearing seats.

If the joist has not been designed for localized accumulation of loads that results in a point or concentrated load, this load attachment shall be made at top or bottom chord panel points. Therefore, specify on the structural drawings, "Where concentrated loads do not occur at panel points, an extra web shall be field applied from the point of attachment to a panel point on the opposite chord", and indicate the extra web size and weld requirements. When exact dimensional locations for concentrated loads are provided by the *specifying professional*, the joist shall be designed for the loads and load locations provided without the need for additional field applied web members at the specified locations.

(b) Specifying Joist Girder Design Loads

The Steel Joist Institute's Design Guide ASD or LRFD Weight Tables for Joist Girders are based on uniformly spaced panel point loading conditions and are valid for use in selecting Joist Girder sizes for gravity conditions that can be expressed in kips (kiloNewtons) per panel point on the Joist Girder. Note that anything other than point loads shall be shown unfactored or in a Load Schedule. For a given Joist Girder span, the *specifying professional* first determines the number of joist spaces. Then the panel point loads are calculated and a depth is selected. The information provided in the tables gives the Joist Girder weight in pounds per linear foot (kiloNewtons per meter) for various depths and loads.

1. The purpose of the Joist Girder Design Guide Weight Table is to assist the *specifying professional* in the selection of a roof or floor support system.
2. It is not necessary to use only the depths, spans, or loads shown in the tables.
3. Holes in chord elements present special problems that shall be considered by both the *specifying professional* and the Joist Girder Manufacturer. The sizes and locations of such holes shall be clearly indicated on the structural drawings.
4. Live load deflection rarely governs because of the relatively small span to depth ratios of Joist Girders. However, it is recommended that a breakdown of the point loads, by load category (i.e. TL/LL), be provided so specified deflection requirements and load combinations can be properly accounted for in design.

Steel Joist Institute – SJI COSP - 2020

Example using *Allowable Strength Design (ASD)* and U. S. Customary units:	**Example using *Load and Resistance Factor Design (LRFD)* and U. S. Customary units:**
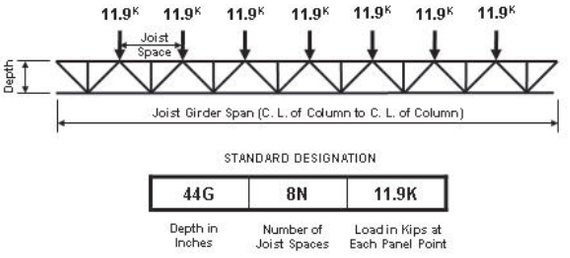	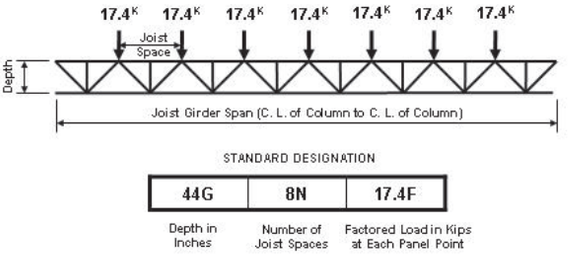
Given 42'-0" x 50'-0" bay. Joists spaced on 5'-3" centers Live Load = 30 psf Dead Load = 15 psf (includes the approximate Joist Girder weight) Total Load = 45 psf Note: Web configuration may vary from that shown. Contact joist manufacturer if exact layout must be known.	Given 42'-0" x 50'-0" bay. Joists spaced on 5'-3" centers Live Load = 30 psf x 1.6 Dead Load = 15 psf x 1.2 (includes the approximate Joist Girder weight) Total Load = 66 psf (factored) Note: Web configuration may vary from that shown. Contact joist manufacturer if exact layout must be known.
1. Determine number of actual joist spaces (N). In this example, N = 8. 2. Compute total load: Total load = 5.25 x 45 psf = 236.25 plf 3. Joist Girder Section: (Interior) a) Compute the concentrated load at top chord panel points P = 236.25 x 50 = 11,813 lbs = 11.9 kips (use 12K for depth selection). b) Select Joist Girder depth: Refer to the ASD Joist Girder Design Guide Weight Table for the 42'-0" span, 8 panel, 12.0K Joist Girder. The rule of about one inch of depth for each foot of span is a good compromise of limited depth and economy. Therefore, select a depth of 44 inches. c) The Joist Girder shall then be designated 44G8N11.9K. d) The ASD Joist Girder Design Guide Weight Table shows the weight for a 44G8N12K as 49 pounds per linear foot. The designer should verify that the weight is not greater than the weight assumed in the Dead Load above.	1. Determine number of actual joist spaces (N). In this example, N = 8. 2. Compute total factored load: Total load = 5.25 x 66 psf = 346.50 plf 3. Joist Girder Section: (Interior) a) Compute the factored concentrated load at top chord panel points P = 346.5 x 50 = 17,325 lbs = 17.4 kips (use 18K for depth selection). b) Select Joist Girder depth: Refer to the LRFD Joist Girder Design Guide Weight Table for the 42'-0" span, 8 panel, 18.0K Joist Girder. The rule of about one inch of depth for each foot of span is a good compromise of limited depth and economy. Therefore, select a depth of 44 inches. c) The Joist Girder shall then be designated 44G8N17.4F. Note that the letter “F” is included at the end of the designation to clearly indicate that this is a factored load. d) The LRFD Joist Girder Design Guide Weight Table shows the weight for a 44G8N18.0F as 49 pounds per linear foot. The designer should verify that the weight is not greater than the weight assumed in the Dead Load above.

e) Check live load deflection:

Live load = 30 psf x 50 ft. = 1500 plf

Approximate Joist Girder moment of inertia

= 0.027 NPLd

= 0.027 x 8 x 11.9 x 42 x 44 = 4750 in.^{4}

Allowable deflection for plastered ceilings

$= L/360 = \frac{42(12)}{360} = 1.40$ in.

$$\Delta = 1.15\left[\frac{5wL^4}{384EI}\right] = \frac{1.15(5)(1.500/12)[(42)(12)]^4}{384(29000)(4750)}$$

= 0.88 in. <1.40 in., Okay

e) Check live load deflection:

Live load = 30 psf x 50 ft. = 1500 plf

Approximate Joist Girder moment of inertia

= 0.018 NPLd

= 0.018 x 8 x 17.4 x 42 x 44 = 4630 in.^{4}

Allowable deflection for plastered ceilings

$= L/360 = \frac{42(12)}{360} = 1.40$ in.

$$\Delta = 1.15\left[\frac{5wL^4}{384EI}\right] = \frac{1.15(5)(1.500/12)[(42)(12)]^4}{384(29000)(4630)}$$

= 0.90 in. <1.40 in., Okay

(c) Load Schedule Example

LOAD SCHEDULE (all loads are to be shown as unfactored)

MARK	DESIGNATION(1) (TL/LL) Joists: (plf) Girders: (kips)	LOADING(2) DL(3) (plf)	LOADING(2) LL(4) or L_r/S/R (plf)	W WIND DOWN WARD (plf)	W WIND NET(5) UPLIFT (plf)	ADD-LOAD(6) TL/LL (kips/kips)	BEND-CHECK(7) D TC (kips)	BEND-CHECK(7) D BC (kips)	REMARKS
J1	18KSP	120	185		180	1.0/0.6		0.3	Axial Loads
J2	24K7SP	85	155						Wind Moments
J3	28LHSP	110	355	95	175	0.5			Drift Loads, see diagram
G1	36G5N6.5K/3.5K				360				End Moments

(1) Joist designation loads include all uniform gravity loads. **Provide both Total and Live loads.**

(2) Loading values are not required if designation loading values are correct for deflection and load combinations.

(3) When standard SJI designations are used, the design Dead Load is required for load combinations with Wind or Seismic.

(4) The Floor or Roof Live load, Snow, or Rain load.

(5) When Net Uplift is specified for simple loading, it shall already take into account possible reduced Dead Loading present in order to create the largest Net uplift load combination. For more complex loading or when the Dead Load varies greatly for use in load combinations below, ***Gross*** uplift should be specified with the minimum and maximum Dead Loading values clearly defined. If the uplift cannot be assigned in pounds per lineal foot, a diagram can be shown for joist loading using pounds per square foot.

(6) A concentrated load applied at any panel point on both the top chord and bottom chord.

(7) Chord members shall be designed for additional bending stresses created by this concentrated Total load.

Steel Joist Institute – SJI COSP - 2020

When in-plane moments (wind load, seismic load) are specified, continuity moments (live load) **shall** also be specified. A Load Schedule that shows a complete breakdown of all loads by Load Category may be required.

AXIAL and END MOMENT LOAD SCHEDULE

MARK	DESIGNATION (TL/LL) Joists: (plf) Girders: (kips)	MIN. I ($in.^4$)	AXIAL			END MOMENTS								TRANSFER DETAILS @ GRIDS
			W WIND (kips)	E SEISMIC (kips)	E_m (kips)	LIVE LOAD CONTINUITY MOMENTS (k-ft.)		LATERAL MOMENTS (k-ft.) W WIND		E		E_m		
						LEFT	RIGHT	LEFT	RIGHT	LEFT	RIGHT	LEFT	RIGHT	
J1	18KSP		W=18.0	E=21.8										9/S8 @ 4
J2	24K7SP					40	40	35	35					
G1	36G5N6.5K/3.5K	985				75	95	55	60					11/S8 @ B,C

When special loads as shown in the tables above are specified, the load combinations to be used for joist and Joist Girder design **shall** be provided. Two examples showing how to list load combinations are shown below:

LRFD example- Basic Load Combinations	**ASD example** - Basic Load Combinations
1. 1.4D	1. D
2. 1.2D + 1.6L + 0.5(L_r or S or R)	2. D + L
3. 1.2D + 1.6(L_r or S or R) + (1.0L or 0.5W)	3. D + (L_r or S or R)
4. 1.2D + 1.0W + 1.0L + 0.5(L_r or S or R)	4. D + 0.75L + 0.75(L_r or S or R)
5. 1.2D + 1.0E + 1.0L + 0.2S	5. D + (0.6W or 0.7E)
6. 0.9D + 1.0W	6a. D + 0.75L + 0.75(0.6W) + 0.75(L_r or S or R)
7. 0.9D + 1.0E	6b. D + 0.75L + 0.75(0.7E) +0.75S
	7. 0.6D + 0.6W
	8. 0.6D + 0.7E
Special Seismic Load Combinations	Special Seismic Load Combinations
8. (1.2 + 0.2S_{DS})D + E_h + L + 0.2S	9. (1.0 + 0.14S_{DS})D + 0.7E_h
9. (0.9 – 0.2S_{DS})D + E_h	10. (1.0 + 0.105S_{DS})D + 0.525E_h + 0.75L + 0.75(L_r or S or R)
	11. (0.6 – 0.14S_{DS})D + 0.7E_h

2.5 JOIST AND JOIST GIRDER EXTENSIONS

Steel joist and Joist Girder extensions shall be specified and designed in accordance with the requirements of the Steel Joist Institute Standard Specifications of latest adoption.

.

Steel Joist Institute – SJI COSP - 2020

2.6 CEILING EXTENSIONS

Ceiling extensions shall be furnished to support ceilings that are to be attached directly to the bottom of the joists. They are not furnished for the support of suspended ceilings. The ceiling extension shall be either an extended bottom chord element or a loose unit, whichever is standard with the manufacturer, and shall be of sufficient strength to properly support any specified ceiling loads.

2.7 BRIDGING AND BRIDGING ANCHORS

(a) Bridging standard with the manufacturer and complying with the Steel Joist Institute Standard Specifications of latest adoption shall be used for bridging all joists furnished by the joist manufacturer. Positive anchorage shall be provided at the ends of each bridging row at both top and bottom chords.

(b) For K-Series and LH-Series joists, horizontal bridging is recommended for spans up to and including 60 feet (18288 mm) except where the Steel Joist Institute Standard Specifications Load Tables & Weight Tables require bolted diagonal bridging for erection stability.

LH-Series and DLH-Series joists exceeding 60 feet (18288 mm) in length shall have bolted diagonal bridging for all rows.

Refer to Section 5.5 in the Steel Joist Institute Standard Specification for erection stability requirements.

Refer to Appendix B for OSHA steel joist erection stability requirements.

Horizontal bridging shall consist of continuous horizontal steel members designed per Section 5.5 in the Steel Joist Institute Standard Specifications. The material sizes listed in Table 2.7-1 meet the requirements of the specifications. Alternately, or for “load/length” designation joists, Table 2.7-2 provides the maximum horizontal bridging force, P_{br}, for various combinations of joist spacing and bridging angle size.

(c) Diagonal cross bridging consisting of angles or other shapes connected to the top and bottom chords of K-Series, LH-Series, and DLH-Series joists shall be used when required by the Steel Joist Institute Standard Specifications of latest adoption.

Diagonal bridging, when used, shall be designed per Section 5.5 in the Steel Joist Institute Standard Specifications.

When the bridging members are connected at their point of intersection, the material sizes listed in Table 2.7-3 and Table 2.7-4 meet the requirements of the specifications.

For LH-Series and DLH-Series joists, where the joist spacing is less than 70 percent of the joist depth, bolted horizontal bridging shall be provided in addition to the diagonal bridging, as shown in Table 2.7-4.

(d) When bolted diagonal erection bridging is required, the following shall apply:

1. The bridging shall be indicated on the joist placement plans.
2. The joist placement plans shall be the exclusive indicator for the proper placement of this bridging.
3. Shop installed bridging clips, or functional equivalents, shall be provided where the bridging bolts to the steel joist.
4. When two pieces of bridging are attached to a steel joist by a common bolt, the nut that secures the first piece of bridging shall not be removed from the bolt for the attachment of the second piece.
5. Bridging attachments shall not protrude above the top chord of the steel joists.
6. See Table 2.7-5 for bolt sizes that meet the connection requirements of the Steel Joist Institute Standard Specifications Section 5.5.

Steel Joist Institute – SJI COSP - 2020

TABLE 2.7-1

MAXIMUM JOIST SPACING FOR HORIZONTAL BRIDGING
SPANS OVER 60 ft. (18.3 m) REQUIRE BOLTED DIAGONAL BRIDGING

JOIST SECTION NUMBER[1]	Nominal Unfactored Force P_{br} lbs (N)	BRIDGING MATERIAL SIZE[2] Equal Leg Angles					
		1 x 7/64 (25 x 3 mm) r = 0.20" (5.08 mm)	**1-1/4 x 7/64 (32 x 3 mm) r = 0.25" (6.35 mm)**	**1-1/2 x 7/64 (38 x 3 mm) r = 0.30" (7.62 mm)**	**1-3/4 x 7/64 (45 x 3 mm) r = 0.35" (8.89 mm)**	**2 x 1/8 (52 x 3 mm) r = 0.40" (10.16 mm)**	**2-1/2 x 5/32 (64 x 4 mm) r = 0.50" (12.70 mm)**
		ft.-in. (mm)	ft.-in. (mm)	ft.-in. (mm)	ft.-in. (mm)	ft.-in. (mm)	ft.-in. (mm)
K1 – 8	340 (1512)	5'-0" (1524)	6'–3" (1905)	7'–6" (2286)	8'-9" (2667)	10'–0" (3048)	12'–6" (3810)
K9-10, LH02-03	450 (2002)	4'-4" (1321)	6'-1" (1854)	7'–6" (2286)	8'–9" (2667)	10'–0" (3048)	12'–6" (3810)
K11-12, LH04-05	560 (2491)	3'–11"(1194)	5'–6" (1676)	7'–4" (2235)	8'–9" (2667)	10'–0" (3048)	12'–6" (3810)
LH06-08	750 (3336)		4'–9" (1448)	6'–3" (1905)	7'–11" (2413)	10'–0" (3048)	12'–6" (3810)
LH09	850 (3781)		4'–5" (1346)	5'–10" (1778)	7'–5" (2261)	9'–9" (2972)	12'–6" (3810)
LH/DLH10	900 (4003)		4'–4" (1321)	5'–8" (1727)	7'–3" (2210)	9'–5" (2870)	12'–6" (3810)
LH/DLH11	950 (4226)		4'–2" (1270)	5'–7" (1702)	7'–0" (2134)	9'–2" (2794)	12'–6" (3810)
LH/DLH12	1100 (4893)		3'-11" (1194)	5'–2" (1575)	6'–8" (2032)	8'–6" (2591)	12'-6" (3810)
LH/DLH13	1200 (5338)		3'-9" (1143)	4'–11" (1499)	6'–3" (1905)	8'-2" (2489)	12-6" (3810)
LH/DLH14	1300 (5783)			4'-9" (1448)	6'-0" (1829)	7'-10" (2388)	12'-4" (3759)
LH/DLH15	1450 (6450)			4'-6" (1372)	5'-8" (1727)	7'-5" (2261)	11'-8" (3556)
LH/DLH16–17	1850 (8229)			4'-0" (1219)	5'-0" (1524)	6'-7"(2007)	10'-4" (3150)
LH/DLH18–20	2350 (10453)			3'-7" (1067)	4'-4" (1321)	5'-10" (1778)	9'-1" (2769)
LH/DLH21–22	3150 (14012)				3'-10" (1168)	5'-0" (1524)	7'-11" (2413)
LH/DLH23–24	4130 (18371)				3'-4" (1016)	4'-5" (1346)	6'-11" (2108)
LH/DLH25	4770 (21218)					4'-1"(1245)	6'-5" (1956)

(1) Refer to last two digit(s) of Joist Designation
(2) Connection to joist shall resist force listed in the Steel Joist Institute Standard Specifications Table 5.5-2

Steel Joist Institute – SJI COSP - 2020

TABLE 2.7-2

MAXIMUM BRIDGING FORCE (P_{br}) FOR HORIZONTAL BRIDGING (lbs)							
JOIST SPACING (ft.-in.)	BRIDGING ANGLE SIZE (EQUAL LEG ANGLE)						
	1 x 7/64 r = 0.20"	1¼ x 7/64 r = 0.25"	1½ x7/64 r = 0.30"	1¾ x 7/64 r = 0.35"	2 x 1/8 r = 0.40"	2½ x 5/32 r = 0.50"	3 x 3/16 r = 0.60"
2'-0"	2150	3960	5600				
2'-6"	1370	2730	4410	5910			
3'-0"	950	1890	3290	4850			
3'-6"	700	1390	2420	3840	6180		
4'-0"	530	1060	1850	2960	5030		
4'-6"	420	840	1460	2340	4000		
5'-0"	340	680	1180	1890	3240		
5'-6"	-	560	980	1560	2670		
6'-0"	-	470	820	1310	2250	5490	
6'-6"	-	-	700	1120	1910	4680	
7'-0"	-	-	600	960	1650	4030	
7'-6"	-	-	520	840	1440	3510	
8'-0"	-	-	-	740	1260	3090	
8'-6"	-	-	-	650	1120	2740	5680
9'-0"	-	-	-	-	1000	2440	5060
9'-6"	-	-	-	-	890	2190	4540
10'-0"	-	-	-	-	810	1970	4100
10'-6"	-	-	-	-	-	1790	3720
11'-0"	-	-	-	-	-	1630	3390
11'-6"	-	-	-	-	-	1490	3100
12'-0"	-	-	-	-	-	1370	2850

Steel Joist Institute – SJI COSP - 2020

TABLE 2.7-3

K, LH, and DLH SERIES JOISTS
MAXIMUM JOIST SPACING FOR DIAGONAL BRIDGING[1]

JOIST DEPTH	BRIDGING ANGLE SIZE – (EQUAL LEG ANGLE)[2]							
	1 x 7/64 (25 x 3 mm) **r = 0.20"** (5.08 mm)	**1-1/4 x 7/64** (32 x 3 mm) **r = 0.25"** (6.35 mm)	**1-1/2 x 7/64** (38 x 3 mm) **r = 0.30"** (7.62 mm)	**1-3/4 x 7/64** (45 x 3 mm) **r = 0.35"** (8.89 mm)	**2 x 1/8** (50 x 3 mm) **r = 0.40"** (10.16 mm)	**2 ½ x 5/32** (64x 4 mm) **r=0.50"** (12.70 mm)	**3 x 3/16** (76 x 5 mm) **r = 0.60"** (15.24 mm)	**3 ½ x 1/4** (89 x 6 mm) **r = 0.70"** (17.78 mm)
in. (mm)	**ft.-in. (mm)**	**ft.-in. (mm)**	**ft.-in. (mm)**	**ft.-in. (mm)**	**ft.-in. (mm)**	**ft.-in. (mm)**	**ft.-in. (mm)**	**ft.-in. (mm)**
12" (305)	6'-7" (2007)	8'-3" (2514)	9'-11"(3022)	11'-7" (3530)	13'-3"(4038)	16'-7"(5055)	19'-11"(6070)	23'-3"(7086)
14" (356)	6'-6" (1981)	8'-3" (2514)	9'-11"(3022)	11'-7" (3530)	13'-3"(4038)	16'-7"(5055)	19'-11"(6070)	23'-3"(7086)
16" (406)	6'-6" (1981)	8'-2" (2489)	9'-10"(2997)	11'-7" (3530)	13'-3"(4038)	16'-7"(5055)	19'-11"(6070)	23'-3"(7086)
18" (457)	6'-6" (1981)	8'-2" (2489)	9'-10"(2997)	11'-6" (3505)	13'-3"(4038)	16'-7"(5055)	19'-11"(6070)	23'-3"(7086)
20" (508)	6'-5" (1955)	8'-2" (2489)	9'-10"(2997)	11'-6" (3505)	13'-2"(4013)	16'-7"(5055)	19'-11"(6070)	23'-3"(7086)
22" (559)	6'-4" (1930)	8'-1" (2463)	9'-10"(2997)	11'-6" (3505)	13'-2"(4013)	16'-6"(5029)	19'-11"(6070)	23'-3"(7086)
24" (610)	6'-4" (1930)	8'-1" (2463)	9'-9" (2971)	11'-5" (3479)	13'-2"(4013)	16'-6"(5029)	19'-10"(6045)	23'-3"(7086)
26" (660)	6'-3" (1905)	8'-0" (2438)	9'-9" (2971)	11'-5" (3479)	13'-1"(3987)	16'-6"(5029)	19'-10"(6045)	23'-2"(7061)
28" (711)	6'-3" (1905)	8'-0" (2438)	9'-8" (2946)	11'-5" (3479)	13'-1"(3987)	16'-6"(5029)	19'-10"(6045)	23'-2"(7061)
30" (762)	6'-2" (1879)	7'-11 (2413)	9'-8" (2946)	11'-4" (3454)	13'-1"(3987)	16'-5"(5004)	19'-10"(6045)	23'-2"(7061)
32" (813)	6'-1" (1854)	7'-10"(2387)	9'-7" (2921)	11'-4" (3454)	13'-0" (3962)	16'-5"(5004)	19'-9"(6020)	23'-2"(7061)
36" (914)	5'-11"(1803)	7'-9" (2362)	9'-6" (2895)	11'-3" (3429)	12'-11"(3973)	16'-4"(4979)	19'-9"(6020)	23'-1"(7035)
40" (1016)	5'-9"(1753)	7'-7" (2311)	9'-5" (2870)	11'-2" (3403)	12'-10"(3911)	16'-4"(4979)	19'-8"(5994)	23'-1"(7035)
44" (1118)	5'-6"(1676)	7'-5" (2260)	9'-3" (2819)	11'-0" (3352)	12'-9" (3886)	16'-3"(4953)	19'-7"(5969)	23'-0"(7010)
48" (1219)	5'-4"(1626)	7'-3" (2209)	9'-2" (2794)	10'-11"(3327)	12'-8" (3860)	16'-2"(4928)	19'-7"(5969)	22'-11"(6985)
52" (1321)	5'-0"(1524)	7'-1"(2159)	9'-0" (2743)	10'-10" (3302)	12'-7" (3835)	16'-1"(4902)	19'-6"(5943)	22'-11"(6985)
56" (1422)	4'-9"(1448)	6'-10"(2083)	8'-10"(2692)	10'-8" (3251)	12'-5" (3784)	16'-0"(4877)	19'-5"(5918)	22'-10"(6960)
60" (1524)	4'-4"(1321)	6'-8"(2032)	8'-7" (2616)	10'-6" (3200)	12'-4" (3759)	15'-10"(4826)	19'-4"(5893)	22'-9"(6935)
64" (1626)	**	6'-4"(1931)	8 -5" (2565)	10'-4" (3149)	12'-2" (3708)	15'-9" (4801)	19'-3"(5867)	22'-8"(6909)
68" (1727)	**	6'-1"(1854)	8'-2" (2489)	10'-2" (3098)	12'-0" (3657)	15'-8" (4775)	19'-2"(5842)	22'-7"(6884)
72" (1829)	**	5'-9"(1753)	8'-0" (2438)	10'-0" (3048)	11'-10"(3606)	15'-6" (4724)	19'-1" (5816)	22'-6" (6858)
80" (2032)	**	5'-0"(1524)	7'-5"(2260)	9'-6" (2895)	11'-6" (3505)	15'-3" (4648)	18'-10"(5740)	22'-4" (6808)
88" (2235)		**	6'-9"(2058)	9'-0" (2743)	11'-1" (3378)	14'-11"(4546)	18'-7" (5664)	22'-1" (6731)
96" (2438)		**	6'-0"(1829)	8'-5" (2565)	10'-8"(3251)	14'-7" (4445)	18'-4" (5588)	21'-11"(6680)
104" (2642)			**	7'-9" (2362)	10'-1"(3073)	14'-2" (4318)	18'-0" (5486)	21'-8" (6604)
112" (2845)			**	7'-0" (2134)	9'-6"(2895)	13'-9" (4191)	17'-8" (5385)	21'-4" (6503)
120" (3048)				**	8'-9"(2667)	13'-4"(4064)	17'-3" (5258)	21'-1" (6426)

**** INTERPOLATION BELOW THE MINIMUM VALUES SHOWN IS NOT ALLOWED.**

1) SEE TABLE 2.7-4 FOR MINIMUM JOIST SPACE FOR DIAGONAL ONLY BRIDGING.
2) In the shaded range of the Table, for LH23, 24,and 25, compressive strength requirements may control, reducing the maximum joist spacing shown. Either select a larger bridging angle size (outside of the shaded area) or check compression strength (Ref. Section 2.7(c)) for LH23, 24, and 25.

TABLE 2.7-4

LH AND DLH SERIES JOISTS HORIZONTAL PLUS DIAGONAL BRIDGING REQUIREMENTS		
JOIST DEPTH	**MINIMUM JOIST SPACE FOR DIAGONAL ONLY BRIDGING** **(0.70 x DEPTH)***	**HORIZONTAL AND DIAGONAL MINIMUM ANGLE SIZE REQUIRED** FOR JOIST SPACING < (0.70 X DEPTH) AND JOIST SPANS > 60'-0" (18.3 m)
in. (mm)	**ft.-in. (mm)**	**in. (mm)**
52" (1321)	3'- 0" (914)	1" x 1" x 7/64" (25 x 3)
56" (1422)	3'- 3" (990)	1" x 1" x 7/64" (25 x 3)
60" (1524)	3'- 6" (1066)	1" x 1" x 7/64" (25 x 3)
64" (1626)	3'- 8" (1117)	1¼" x 1¼" x 7/64" (32 x 3)
68" (1727)	3'-11" (1193)	1¼" x 1¼" x 7/64" (32 x 3)
72" (1829)	4'- 2" (1270)	1¼" x 1¼" x 7/64" (32 x 3)
80" (2032)	4'- 8" (1422)	1¼" x 1¼" x 7/64" (32 x 3)
88" (2235)	5'- 1" (1549)	1 ½" x 1 ½" x 7/64" (38 x 3)
96" (2438)	5'- 7" (1702)	1 ½" x 1 ½" x 7/64" (38 x 3)
104" (2642)	6'- 0" (1829)	1 ¾" x 1 ¾" x 7/64" (44 x 3)
112" (2845)	6'- 6" (1981)	1 ¾" x 1 ¾" x 7/64" (44 x 3)
120" (3048)	7'- 0" (2134)	2" x 2" x1/8" (51 x 3)
*NOTE: WHEN THE JOIST SPACING IS LESS THAN 0.70 x JOIST DEPTH, BOLTED HORIZONTAL BRIDGING SHALL BE USED IN ADDITION TO DIAGONAL BRIDGING.		

TABLE 2.7-5

BOLT SIZES WHICH MEET BOLTED BRIDGING CONNECTION REQUIREMENTS		
JOIST SERIES	**SECTION NUMBER***	**BOLT DIAMETER**
K	ALL	3/8" (10 mm) A307
LH/DLH	2 – 12	3/8" (10 mm) A307
LH/DLH	13 – 17	1/2" (13 mm) A307
LH/DLH	18 – 20	5/8" (16 mm) A307
LH/DLH	21 – 22	5/8" (16 mm) A325
LH/DLH	23 – 25	3/4" (19 mm) A325
*REFER TO LAST DIGIT(S) OF JOIST DESIGNATION NOTE: WASHERS SHALL BE USED WITH SLOTTED OR OVERSIZED HOLES. BOLTS SHALL BE TIGHTENED TO A MINIMUM SNUG TIGHT CONDITION.		

Steel Joist Institute – SJI COSP - 2020

2.8 HEADERS

Where the end reaction of a steel joist is supported by a header, as outlined and defined in Section 5.2(a), and is not more than 10,000 pounds (44482 N), the header shall be furnished by the Seller. Such headers shall be any type standard with the joist manufacturer. Conditions involving headers shall be investigated during erection and, if necessary, provisions made to provide a safe condition. Headers are not provided for steel joists with end reactions greater than 10,000 pounds (44482 N).

2.9 BOTTOM CHORD LATERAL BRACING FOR JOIST GIRDERS

Bottom chord lateral bracing shall be furnished as required to prevent lateral movement of the bottom chord of the Joist Girder and to prevent the ratio of chord length to chord radius of gyration from exceeding that specified in the Steel Joist Institute Standard Specifications of latest adoption. The lateral bracing shall be that which is standard with the joist manufacturer, and shall be sufficient to properly brace the bottom chord of the Joist Girder.

2.10 CONNECTIONS

The adequacy of the end anchorage connection (bolted or welded) between the joist or Joist Girder bearing seat and the supporting structure is the responsibility of the *specifying professional*. The contract documents shall clearly illustrate the end anchorage connection. Forces to be considered include end moments, axial loads, and diaphragm boundaries. Particular attention is required where there is net uplift.

Welded End Anchorage for Uplift
The strength of the joist bearing seat for an uplift loading combination is a function of both the joist seat thickness and length of the end anchorage welds. The minimum end anchorage welds as shown in the Steel Joist Institute Standard Specifications Table 5.7-1 may not develop the full capacity of the joist seat assembly for the specified uplift resistance. When the support dimensions allow, it is recommended the *specifying professional* use a small fillet weld thickness in conjunction with a longer weld length for the connection design to facilitate the design of the joist bearing seat. The joist manufacturer will provide a seat of sufficient thickness and strength to resist the uplift end reaction resulting from the specified uplift. For additional information, including tables for welded end anchorage uplift capacities, refer to Steel Joist Institute Technical Digest 6, “Structural Design of Steel Joist Roofs to Resist Uplift Loads”

Bolted End Anchorage for Uplift
Typically, joists and Joist Girders with bolted end anchorage also require a final connection by welding in order to provide lateral stability to the supporting member. However, only the bolts are relied on to provide uplift anchorage. The bolt type and diameter designed by the *specifying professional* shall provide sufficient tensile strength to resist the uplift end reaction resulting from the specified uplift. Bolts of higher strength than the minimum required by the Steel Joist Institute Standard Specifications may be required.

When the bearing seats are detailed for a bolted connection, bolts shall be installed. If the bolts are not installed, an equivalent welded connection may be permitted by the *specifying professional*, provided the weld is deposited in the slot on the side farthest from the edge of the seat. Additional weld required to meet that specified for the welded connection shall be placed at a location on the seat away from the outer edge of the slot as shown in Figure 2.10-1.
For additional information, including tables for bolted end anchorage uplift capacities, refer to Steel Joist Institute Technical Digest 6, “Structural Design of Steel Joist Roofs to Resist Uplift Loads”

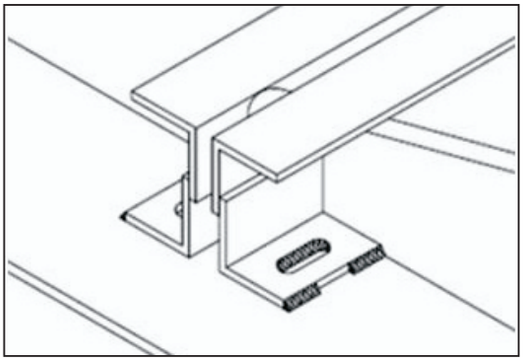

Figure 2.10-1

SECTION 3.
MATERIALS

3.1 STEEL

The steel used in the manufacture of joists and Joist Girders shall comply with the Steel Joist Institute Standard Specifications of latest adoption.

3.2 PAINT

(a) Standard Shop Paint - The shop coat of paint, when specified, shall comply with the Steel Joist Institute Standard Specifications of latest adoption.

(b) Disclaimer - The typical shop applied paint that is used to coat steel joists and Joist Girders is a dip applied, air dried paint. The paint is intended to be an impermanent and provisional coating which shall protect the steel for only a short period of exposure in ordinary atmospheric conditions.

Since most joists and Joist Girders are painted using a standard dip coating, the coating shall be permitted to not be uniform and shall be permitted to include drips, runs, and sags. Compatibility of any coating including fire protective coatings applied over the standard shop paint shall be the responsibility of the specifier and/or painting contractor.

The shop applied paint may require field touch-up/repair as a result of, but not limited to, the following:

1. Abrasions from: Bundling, banding, loading and unloading, chains, dunnage during shipping, cables and chains during erection, bridging, installation, and other handling at the jobsite.
   NOTE: Rusting should be expected at any abrasion.
2. Dirt.
3. Diesel smoke.
4. Road salt.
5. Weather conditions during storage.

The joist manufacturer shall not be responsible for the condition of the paint if it is not properly protected after delivery.

Steel Joist Institute – SJI COSP - 2020

SECTION 4.
INSPECTION

Inspections shall be made in accordance with Section 5.14 of the Steel Joist Institute Standard Specifications of latest adoption.

SECTION 5.
ESTIMATING

5.1 PLANS FOR BIDDING

Plans to serve as the basis for bids shall show the character of the work with sufficient clarity to permit making an accurate estimate and shall show the following:

- Designation and location of Materials [see Section 5.2(a)], including any special design or configuration requirements
- Locations and elevations of all steel and concrete supporting members and bearing walls
- Location and length of joist extended ends
- Location and size of all openings in floors and roofs
- Location of all partitions
- Loads and their locations as defined in Section 6.1
- Construction and thickness of floor slabs, roof deck, ceilings and partitions
- Joists or Joist Girders requiring extended bottom chords
- Paint, if other than manufacturer's standard

5.2 SCOPE OF ESTIMATE

(a) Unless otherwise specified, the following items shall be included in the estimate, and requirements shall be determined as outlined in Section 6.1:

- Steel Joists
- Joist Girders
- Joist Substitutes
- Joist Extended Ends
- Ceiling Extensions
- Extended bottom chord used as strut
- Bridging
- Joist Girder bottom chord bracing
- Headers which are defined as members supported by and carrying Open Web Steel Joists with end reactions of no more than 10,000 lbs. (44482 N)
- One shop coat of paint, when specified, shall be in accordance with Section 3.2

(b) The following items shall not be included in the estimate but shall be permitted to be quoted and identified by the joist manufacturer as separate items:

- Headers carrying Open Web Steel Joists with end reactions greater than 10,000 lbs. (44482 N)
- Headers for Deep Longspan Steel Joists, **DLH**-Series

- Reinforcement in slabs over joists
- Centering material, decking, and attachments
- Miscellaneous framing between joists for openings at ducts, dumbwaiters, ventilators, skylights, etc.
- Loose individual or continuous bearing plates and bolts or anchors for such plates
- Erection bolts for joist and Joist Girder end anchorage
- Horizontal bracing in the plane of the top and bottom chords from joist to joist or joist to structural framing and walls
- Bridging anchors and anchorage
- Wood nailers
- Moment plates
- Special joist configuration or bridging layouts for ductwork or sprinkler systems
- Shear studs

SECTION 6.
PLANS AND SPECIFICATIONS

6.1 PLANS FURNISHED BY BUYER

The Buyer shall furnish the Seller plans and specifications as prepared by the *specifying professional* showing all Material requirements and steel joist and/or steel Joist Girder designations, the layout of walls, columns, beams, girders and other supports, as well as floor and roof openings and partitions correctly dimensioned. The elevation of finished floors, roofs, and bearings shall be shown.

(a) Loads

The *specifying professional* shall clearly provide all design loads as described in Section 2.4 This includes the live loads to be used, the wind uplift if any, the weights of partitions and the location and amount of any special loads, such as monorails, fans, blowers, tanks, etc.

(b) Connections

Minimum end anchorage for simple span gravity loading shall be in accordance with Steel Joist Institute Standard Specifications of latest adoption, Section 5.7. The end anchorage of a steel joist or Joist Girder is the connection of the joist or Joist Girder bearing seat to the support of the joist or Joist Girder.

The adequacy of the end anchorage connection (bolted or welded) between the joist or Joist Girder bearing seat and the supporting structure is the responsibility of the *specifying professional*. The contract documents shall clearly illustrate the end anchorage connection.

The joist manufacturer is responsible for the design of the bearing seats of joists or Joist Girders for the loads designated by the *specifying professional* in the contract documents.

The *specifying professional* is responsible for bridging termination connections. The contract documents shall clearly illustrate these termination connections.

(c) Special Considerations

The *specifying professional* shall indicate on the construction documents special considerations including:

1) Profiles for non-standard joist and Joist Girder configurations (Standard joist and Joist Girder configurations are as indicated in the Steel Joist Institute Standard Specifications of latest adoption).
2) Oversized or other non-standard web openings
3) Extended Ends

4) Deflection criteria for live and total loads for non-SJI standard joists
5) Non-SJI standard bridging

6.2 PLANS FURNISHED BY SELLER

The Seller shall furnish the buyer with steel joist placement plans to show the material as specified on the construction documents and are to be utilized for field installation in accordance with specific project requirements as stated in Section 6.1. Steel placement plans shall include, at a minimum, the following:

a) Listing of all applicable loads as stated in Section 6.1 and used in the design of the steel joists and Joist Girders as specified in the construction documents.
b) Profiles for non-standard joist and Joist Girder configurations (standard joist and Joist Girder configurations are as indicated in the Steel Joist Institute Standard Specifications of latest adoption).
c) Connection requirements for:
    1) Joist supports
    2) Joist Girder supports
    3) Field splices
    4) Bridging attachments
d) Deflection criteria for live load and total loads for non-SJI standard joists.
e) Size, location, and connections for all bridging
f) Joist headers

All Material shall be identified with its mark which also appears on the Bill of Materials. The shop paint shall be as noted on the joist placement plans. **Steel joist placement plans do not require the seal and signature of the joist manufacturer's registered design professional**.

6.3 DISCREPANCIES

The *specifying professional's* bid plans and specifications shall be assumed to be correct in the absence of written notice from the Buyer to the contrary. When plans are furnished by the Buyer that do not agree with the Architect's bid plans, such detailed plans shall be considered as a written notice of change of plans. However, it shall be the Buyer's responsibility to advise the Seller of those changes which affect the joists or Joist Girders.

6.4 APPROVAL

When joist placement plans are furnished by the Seller, they are submitted to the Buyer and owner for examination and approval. The Seller allows a maximum of fourteen (14) calendar days in their schedule for the return of placement plans noted with the owner's and customer's approval, or approval subject to corrections as noted. The Seller makes the corrections, furnishes corrected prints for field use to the owner/customer and is released by the owner/customer to start joist manufacture.

Approval by the owner/customer of the placement plans, sections, notes and joist schedule prepared by the Seller indicates that the Seller has correctly interpreted the contract requirements, and is released by the owner/customer to start joist manufacture. This approval constitutes the owner's/customer's acceptance of all responsibility for the design adequacy of any detail configuration of joist support conditions shown by the Seller as part of the preparation of these placement plans.

Approval does not relieve the Seller of the responsibility for accuracy of detail dimensions on the plans, nor the general fit-up of joists to be placed in the field.

6.5 CHANGES

When any changes in plans are made by the Buyer (or the buyer's representative) either prior to or after approval of detailed plans, or when any Material is required and was not shown on the plans used as the basis of the bid, the cost of such changes and/or extra Material shall be paid by the Buyer at a price to be agreed upon between Buyer and Seller.

6.6 CALCULATIONS

The Seller shall design the steel joists and/or steel Joist Girders in accordance with the current Steel Joist Institute Standard Specifications of latest adoption to support the load requirements of Section 6.1. The *specifying professional* may require submission of the steel joist and Joist Girder calculations as prepared by a registered design professional responsible for the product design. If requested by the *specifying professional*, the steel joist manufacturer shall submit design calculations with a cover letter bearing the seal and signature of the joist manufacturer's registered design professional. In addition to standard calculations under this seal and signature, submittal of the following shall be included:

a) Non-SJI standard bridging details (e.g. for cantilevered conditions, net uplift, etc.)

b) Connection details for:

   1) Non-SJI standard connections (e.g. flush framed or framed connections)
   2) Field splices
   3) Joist headers

SECTION 7.
HANDLING AND ERECTION

The Buyer and Erector shall comply with the requirements of the Steel Joist Institute Standard Specifications of latest adoption in the handling and erection of Material. For additional coverage of this topic, refer to the Steel Joist Institute's Technical Digest 9, "Handling and Erection of Steel Joists and Joist Girders".

The Buyer and/or Erector shall check all materials on arrival at job site and promptly report to Seller any discrepancies and/or damages.

When joists cannot be delivered as a single piece, they shall be permitted to be delivered in several pieces therefore requiring the pieces to be spliced together in the field. The manufacturer's instructions SHALL be followed to ensure matching pieces are joined, proper bolts are used, and any required bolt tensioning is incorporated.

All joists shall be handled by methods which avoid damage to any part of the joist. For long **LH**-Series joists, **DLH**-Series joists, or Joist Girders this may require the use of spreader bars, multiple hoisting cables, or multiple cranes as necessary to safely handle the joist. Hoisting cables shall be attached at panel points and shall be at panel point locations selected to minimize erection stresses.

The current OSHA, 29 CFR Part 1926, Safety Standards for Steel Erection; Subpart R- Steel Erection, refers to certain joists at or near columns to be designed with sufficient strength to allow one employee to release the hoisting cable without the need for erection bridging. **This STANDARD shall not be interpreted that any joist at or near a column line is safe to support an employee without bridging installed.** Many limitations exist that prevent these joists from being designed to safely allow an employee on an un-bridged joist. Because of these limitations these joists shall be erected by incorporating erection methods ensuring joist stability and either:

1) Installing bridging or otherwise stabilizing the joist prior to releasing the hoisting cable, or
2) Releasing the hoisting cable without having a worker on the joist.

A steel joist or Joist Girder shall not be placed on any support structure unless such structure is stabilized. When steel joists or Joist Girders are landed on a structure, they shall be secured to prevent unintentional displacement prior to installation.

Steel Joist Institute – SJI COSP - 2020

A bridging terminus point shall be established before joist bridging is installed.

Steel joist and Joist Girders shall not be used as anchorage points for a fall arrest system unless written directions to do so is obtained from a "qualified person". (For definition of "qualified person" see Code of Federal Regulations (CFR), Occupational Safety and Health Administration (OSHA), 29 CFR Part 1926, Safety Standards for Steel Erection; Subpart R- Steel Erection, §1926.751 Definitions, January 18, 2001, Washington, D.C.)

No modification that affects the strength of a steel joist or Joist Girder shall be made without the written approval of the project engineer of record.

The Seller shall not be responsible for the condition of paint finish on Material if it is not properly protected after delivery.

The Seller shall not be responsible for improper fit of Material due to inaccurate construction work.

SECTION 8.
BUSINESS RELATIONS

8.1 PRESENTATION OF PROPOSALS

All proposals for furnishing Material shall be made on a sales contract form. After acceptance by the Buyer, these proposals shall be approved or executed by a qualified official of the Seller. Upon such approval the proposal becomes a contract.

8.2 ACCEPTANCE OF PROPOSALS

All proposals are intended for prompt acceptance and are subject to change without notice.

8.3 BILLING

Contracts on a lump sum basis are to be billed proportionately as shipments are made.

8.4 PAYMENT

Payments shall be made in full on each invoice without retention.

8.5 ARBITRATION

All business controversies which cannot be settled by direct negotiations between Buyer and Seller shall be submitted to arbitration. Both parties shall sign a submission to arbitration and if possible agree upon an arbitrator. If they are unable to agree, each shall appoint an arbitrator and these two shall appoint a third arbitrator. The expenses of the arbitration shall be divided equally between the parties, unless otherwise provided for in the agreements to submit to arbitration. The arbitrators shall pass final judgment upon all questions, both of law and fact, and their findings shall be conclusive.

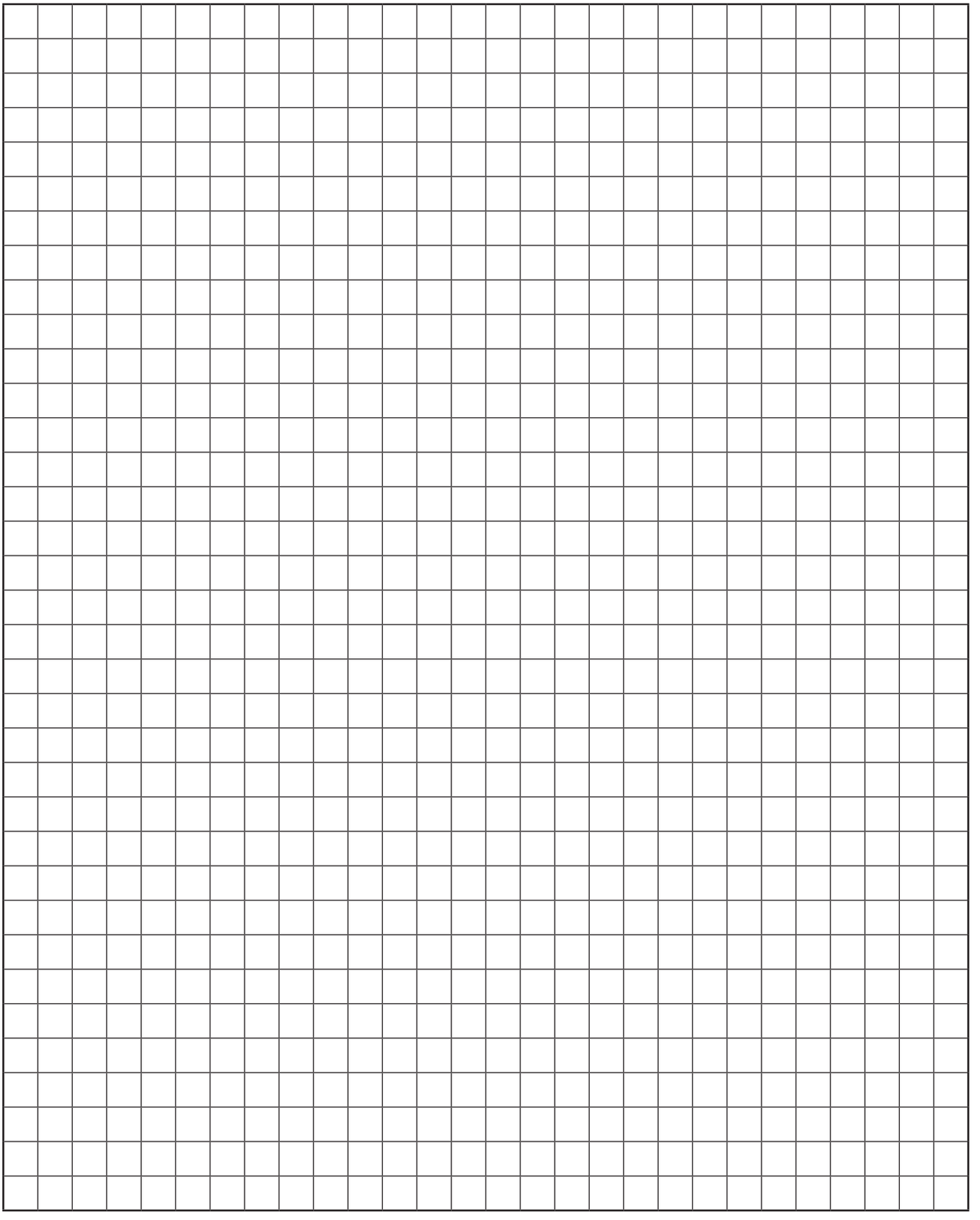

American National Standard SJI 100 - 2020

STANDARD SPECIFICATION

FOR K-SERIES, LH-SERIES, AND DLH-SERIES OPEN WEB STEEL JOISTS AND FOR JOIST GIRDERS.

K-Series Adopted by the Steel Joist Institute November 4, 1985
LH/DLH-Series Adopted by the Steel Joist Institute May 10, 2006
Joist Girders Adopted by the Steel Joist Institute November 4, 1985
Revised to April 27, 2020, Effective July 1, 2020

SECTION 1.
SCOPE AND DEFINITIONS

1.1 SCOPE

The *Standard Specification for* K-*Series*, LH-*Series,* DLH-*Series Open Web Steel Joists and for Joist Girders*, hereafter referred to as the Specification, covers the design, manufacture, application, and erection stability and handling of Joist Girders and Open Web Steel Joists K-Series, LH-Series, and DLH-Series in buildings or other structures, where other structures are defined as those structures designed, manufactured, and erected in a manner similar to buildings. Joist Girders and K-Series, LH-Series, and DLH-Series joists shall be designed using Allowable Stress Design (ASD) or Load and Resistance Factor Design (LRFD) in accordance with this Specification. Included as part of this Specification are KCS joists, K-Series; Joist Substitutes, K-Series; and Top Chord Extensions and Extended Ends, K-Series.

1.2 OTHER REGULATIONS

Joist Girders and K-Series, LH-Series, and DLH-Series joists shall be erected in accordance with the Occupational Safety and Health Administration (OSHA), 29 CFR Part 1926, Safety Standards for Steel Erection, Subpart R – Steel Erection. The erection of Joist Girders and K-Series, LH-Series, and DLH-Series joists 144 ft. (43.9 m) or less in length shall be in accordance with the requirements of Section 1926.757, Open Web Steel Joists. Joist Girders and DLH–Series joists greater than 144 ft. (43.9 m) in length shall be in accordance with the requirements of Section 1926.756 Beams and Columns.

1.3 APPLICATION

This Specification includes Section 1 through Section 6. The user notes shall not be part of the Specification.

User Note: User notes are intended to provide practical guidance in the use and application of this Specification.

1.4 DEFINITIONS

The following terms shall, for the purposes of this Specification, have the meanings shown in this Section. Where terms are not defined in this Section, those terms shall have their ordinary accepted meanings in the context in which it applies.

Joist Girders, K-Series, LH-Series, and DLH-Series shall be open web, in-plane load-carrying steel members utilizing hot-rolled or cold-formed steel, including cold-formed steel whose yield strength has been attained by cold working.

Joist Girders shall be open web steel trusses used as primary framing members designed as simple spans supporting in-plane concentrated loads for a floor or roof system. These concentrated loads shall be considered to act at the top chord panel points of the Joist Girders unless otherwise specified.

American National Standard SJI 100 - 2020

The Joist Girder standard designation in ASD shall be established by its nominal depth in inches (mm), the letter "G", followed by the number of joist spaces, the letter "N", the load in kips (kN) at each panel point, and the letter "K". The Joist Girder standard designation in LRFD shall be established by its nominal depth in inches (mm), the letter "G", followed by the number of joist spaces, the letter "N", the factored load in kips (kN) at each panel point, and the letter "F". Joist Girders shall be designed in accordance with this Specification to support the loads defined by the specifying professional.

Joist Girders shall be designed and manufactured as either simple framing members with underslung ends and bottom chord extensions or as part of an ordinary steel moment frame (OMF). Where used as part of an OMF the specifying professional shall be responsible for carrying out all the required frame analyses (i.e. first-order and second-order), provide all the required load information and stiffness data to the joist manufacturer, and indicate the type of **Joist Girder** to column connections that are being designed on the structural drawings.

User Note: Joist Girders have been standardized in depths from 20 inches (508 mm) through 120 inches (3048 mm), for spans from 20 feet (6096 mm) through 120 feet (36576 mm).

Where this Specification refers to "steel joists", this shall mean the K-Series, LH-Series, and DLH-Series joists.

User Note: Joists are suitable for the direct support of floors and roof slabs or decks. The K-Series joists are standardized in depths from 10 inches (254 mm) through 30 inches (762 mm), for spans up through 60 feet (18288 mm). The LH-Series joists are standardized in depths from 18 inches (457 mm) through 48 inches (1219 mm), for spans up through 96 feet (29261 mm). The DLH-Series joists are standardized in depths from 52 inches (1321 mm) through 120 inches (3048 mm), for spans up through 240 feet (73152 mm).

The K-Series, LH-Series and DLH-Series standard joist designations shall be established by their nominal depth, followed by the letters K, LH or DLH as appropriate, and then by the Section Number designation assigned. The Section Number designations shall range from 01 to 25. The K-Series, LH-Series and DLH-Series standard joist designations listed in the following Standard Load Tables shall support the uniformly distributed loads as provided in the applicable tables:

Standard LRFD Load Table Open Web Steel Joists, K-Series – U.S. Customary Units
Standard ASD Load Table Open Web Steel Joists, K-Series – U.S. Customary Units
Standard LRFD Load Table Longspan Steel Joists, LH-Series – U.S. Customary Units
Standard ASD Load Table Longspan Steel Joists, LH-Series – U.S. Customary Units
Standard LRFD Load Table Deep Longspan Steel Joists, DLH-Series – U.S. Customary Units
Standard ASD Load Table Deep Longspan Steel Joists, DLH-Series – U.S. Customary Units
Standard LRFD Load Table Open Web Steel Joists, K-Series – S.I. Units
Standard ASD Load Table Open Web Steel Joists, K-Series – S.I. Units
Standard LRFD Load Table Longspan Steel Joists, LH-Series – S.I. Units
Standard ASD Load Table Longspan Steel Joists, LH-Series – S.I. Units
Standard LRFD Load Table Deep Longspan Steel Joists, DLH-Series – S.I. Units
Standard ASD Load Table Deep Longspan Steel Joists, DLH-Series – S.I. Units

Wherever a standard SJI Section Number is specified in the joist designation (e.g. 18K4, 32LH10) and other design load cases are also specified for the joist, the steel joist shall be designed for the corresponding total load as shown in the Standard Load Tables as a minimum.

User Note: Six standard types of K-Series, LH-Series and DLH-Series joists are designed and manufactured. These types are underslung (top chord bearing) or square-ended (bottom chord bearing), with parallel chords or with single or double pitched top chords. The Standard Load Tables apply for a pitched top chord up to 1/2 inch per foot (1:24).

The steel joist or Joist Girder designation depth shall be the depth at mid-span.

An alternate method of specifying a standard K-Series, LH-Series, or DLH-Series joist shall be permitted by providing the designation in a "load/load" sequence. The format used shall be ddKtl/ll, ddLHtl/ll, or ddDLHtl/ll where:

dd is the nominal depth of the joist in inches (mm)
tl is the total uniformly distributed load applied to the joist top chord, plf (kN/m)
ll is the uniform live load for which the deflection shall be checked and limited as required by this Specification, plf (kN/m)

American National Standard SJI 100 - 2020

User Note: The load/load K-Series, LH-Series, or DLH-Series joists can be specified in depths from 10 inches (254 mm) through 120 inches (3048 mm) and spans up through 240 feet (73152 mm). The maximum uniformly distributed load-carrying capacity of 2400 plf (35.03 kN/m) in ASD and 3600 plf (52.54 kN/m) in LRFD has been established for this alternate K-Series, LH-Series, or DLH-Series format. The maximum capacity for any given load/load joist designation is a function of span, depth and chord member size. When requirements exceed the standard K-Series load table limitations for loading, span, and depth, an LH-Series designation is recommended to facilitate the proper determination of minimum seat depth, end anchorage, bridging size, deck attachment, etc. Thus, any joist exceeding a 30 inch depth, a span of 60 feet, an in-kip moment of Depth x 61 kips in ASD or Depth x 91.5 kips in LRFD, or an end reaction of 9.2 kips in ASD or 13.8 kips in LRFD should be designated as an LH-Series which allows for a cross-reference with a standard LH designation as listed in this Specification for seat, end anchorage, bridging, attachment tables, etc.

A KCS Joist is a particular type of K-Series joist, and shall be designed in accordance with this Specification based on an envelope of moment and shear capacity, rather than uniform load capacity, to support uniform plus concentrated loads or other non-uniform loads. The KCS Joists shall be selected from standardized depths from 10 inches (254 mm) through 30 inches (762 mm), for spans up through 60 feet (18288 mm). The maximum total safe uniformly distributed load-carrying capacity of a KCS Joist, K-Series, shall be 550 plf (8.02 kN/m) in ASD or 825 plf (12.03 kN/m) in LRFD. A KCS Joist shall be parallel chord only and shall be permitted to be underslung or bottom chord bearing.

The KCS Joists, K-Series, standard designations shall be established by their nominal depth, followed by the letters “KCS”, and then by the Section Number designation assigned. The Section Number designations shall range from 1 to 5. A KCS Joist shall not be designated using the alternate “load/load” method. The KCS Joists, K-Series, standard designations listed in the following Standard Load Tables shall provide the moment capacity and shear capacity as listed in the applicable tables:

Standard LRFD Load Table for KCS Open Web Steel Joists – U.S. Customary Units
Standard ASD Load Table for KCS Open Web Steel Joists – U.S. Customary Units
Standard LRFD Load Table for KCS Open Web Steel Joists – S.I. Units
Standard ASD Load Table for KCS Open Web Steel Joists – S.I. Units

Where an open web configuration becomes impractical, a Joist Substitute, K-Series, shall be designed in accordance with this Specification to support uniform loads when the span is less than 10 feet (3048 mm). The maximum total safe uniformly distributed load-carrying capacity of a Joist Substitute shall be 550 plf (8.02 kN/m) in ASD or 825 plf (12.03 kN/m) in LRFD.

The Joist Substitutes, K-Series, standard designations shall be established by their nominal depth, e.g. 2.5, followed by the letter “K” and then by the chord size designation assigned. The chord size designations shall range from 1 to 3. The Joist Substitutes, K-Series, standard designations listed in the following Load Tables shall support the uniformly distributed loads as provided in the applicable tables:

User Note: The Joist Substitutes, K-Series, are standardized as 2.5 inch (64 mm) deep sections for spans up through 10’-0” (3048 mm).

LRFD Simple Span Load Table for 2.5 Inch K–Series Joist Substitutes – U.S. Customary Units
ASD Simple Span Load Table for 2.5 Inch K–Series Joist Substitutes – U.S. Customary Units
LRFD Simple Span Load Table for 64 mm K–Series Joist Substitutes – S.I. Units
ASD Simple Span Load Table for 64 mm K–Series Joist Substitutes – S.I. Units

LRFD Outriggers Load Table for 2.5 Inch K–Series Joist Substitutes – U.S. Customary Units
ASD Outriggers Load Table for 2.5 Inch K–Series Joist Substitutes – U.S. Customary Units
LRFD Outriggers Load Table for 64 mm K–Series Joist Substitutes – S.I. Units
ASD Outriggers Load Table for 64 mm K–Series Joist Substitutes – S.I. Units

A Top Chord Extension or Extended End, K-series, shall be a joist accessory that shall be designed in accordance with this Specification to support uniform loads when one or both ends of an underslung joist needs to be cantilevered beyond its bearing seat.

User Note: The Top Chord Extensions and Extended Ends are standardized as an “S” Type (top chord angles extended only) and an “R” Type (top chord and bearing seat angles extended), respectively.

American National Standard SJI 100 - 2020

Standard designations for the "S" Type shall range from S1 to S12 for spans from 0'-6" to 4'-6" (152 to 1372 mm). Standard designations for the "R" Type shall range from R1 to R12 for spans from 0'-6" to 6'-0" (152 to 1829 mm). The maximum total safe uniformly distributed load-carrying capacity of either an "R" or "S" Type extension shall be 550 plf (8.02 kN/m) in ASD or 825 plf (12.03 kN/m) in LRFD. The "S" Type Top Chord Extensions and "R" Type Extended Ends listed in the following Standard Load Tables shall support the uniformly distributed loads as provided in the applicable tables:

LRFD Top Chord Extension Load Table (S Type) – U.S. Customary Units
ASD Top Chord Extension Load Table (S Type) – U.S. Customary Units
LRFD Top Chord Extension Load Table (R Type) – U.S. Customary Units
ASD Top Chord Extension Load Table (R Type) – U.S. Customary Units
LRFD Top Chord Extension Load Table (S Type) – S.I. Units
ASD Top Chord Extension Load Table (S Type) – S.I. Units
LRFD Top Chord Extension Load Table (R Type) – S.I. Units
ASD Top Chord Extension Load Table (R Type) – S.I. Units

1.5 STRUCTURAL DESIGN DRAWINGS AND SPECIFICATIONS

The structural design drawings and specifications shall meet the requirements in the *Code of Standard Practice for Steel Joists and Joist Girders*, except for deviations specifically identified in the design drawings and/or specifications.

SECTION 2.
REFERENCED SPECIFICATIONS, CODES AND STANDARDS

2.1 REFERENCES

The standards listed below shall be considered as part of the requirements of this Specification. Where conflicts occur between this Specification and a referenced standard, the provisions of this Specification shall take precedence unless otherwise stated. This section lists the standards that are referenced in this Specification. The standards are listed in alphabetical order by name of standards developer organization, with the specific standard designations, title and dates of each of the referenced standards below.

American Institute of Steel Construction, Inc. (AISC), Chicago, IL

ANSI/AISC 360-10 *Specification for Structural Steel Buildings*

American Iron and Steel Institute (AISI), Washington, DC

ANSI/AISI S100-2012 *North American Specification for the Design of Cold-Formed Steel Structural Members*

American Society of Civil Engineers (ASCE), Reston, VA

SEI/ASCE 7-10 *Minimum Design Loads for Buildings and Other Structures*

American Society of Testing and Materials, ASTM International (ASTM), West Conshohocken, PA

ASTM A6/A6M-13A, *Standard Specification for General Requirements for Rolled Structural Steel Bars, Plates, Shapes, and Sheet Piling*

American National Standard SJI 100 - 2020

ASTM A36/A36M-12, *Standard Specification for Carbon Structural Steel*

ASTM A242/242M-13, *Standard Specification for High-Strength Low-Alloy Structural Steel*

ASTM A307-12a, *Standard Specification for Carbon Steel Bolts and Studs, 60 000 PSI Tensile Strength*

ASTM A325/325M-13, *Standard Specification for Structural Bolts, Steel, Heat Treated, 120/105 ksi [830 MPa] Minimum Tensile Strength*

ASTM A370-12a, *Standard Test Methods and Definitions for Mechanical Testing of Steel Products*

ASTM A500/A500M-13, *Standard Specification for Cold-Formed Welded and Seamless Carbon Steel Structural Tubing in Rounds and Shapes*

ASTM A501-07 *Standard Specification for Hot-Formed Welded and Seamless Carbon Steel Structural Tubing* ASTM

A529/A529M-05(2009), *Standard Specification for High-Strength Carbon-Manganese Steel of Structural Quality* ASTM

A572/A572M-13a, *Standard Specification for High-Strength Low-Alloy Columbium-Vanadium Structural Steel*

ASTM A588/A588M-10, *Standard Specification for High-Strength Low-Alloy Structural Steel, up to 50 ksi [345 MPa] Minimum Yield Point, with Atmospheric Corrosion Resistance*

ASTM A606/A606M-09a, *Standard Specification for Steel, Sheet and Strip, High-Strength, Low-Alloy, Hot-Rolled and Cold-Rolled, with Improved Atmospheric Corrosion Resistance*

ASTM A992/A992M-11, *Standard Specification for Structural Steel Shapes*

ASTM A1008/A1008M-13, *Standard Specification for Steel, Sheet, Cold-Rolled, Carbon, Structural, High-Strength Low-Alloy and High-Strength Low-Alloy with Improved Formability, Solution Hardened, and Bake Hardenable*

ASTM A1011/A1011M-13, *Standard Specification for Steel, Sheet and Strip, Hot-Rolled, Carbon, Structural, High-Strength Low-Alloy, High-Strength Low-Alloy with Improved Formability, and Ultra-High Strength*

ASTM A1065/A1065M-09(2014) *Standard Specification for Cold-Formed Electric-Fusion (ARC) Welded High-Strength Low-Alloy Structural Tubing in Shapes with 50 ksi (345 MPA) Minimum Yield Point*

ASTM A1085-13 *Standard Specification for Cold-Formed Welded Carbon Steel Hollow Structural Sections (HSS)*

American Welding Society (AWS), Miami, FL

AWS A5.1/A5.1M-2012, *Specification for Carbon Steel Electrodes for Shielded Metal Arc Welding*

AWS A5.5/A5.5M:2006, *Specification for Low-Alloy Steel Electrodes for Shielded Metal Arc Welding*

AWS A5.17/A5.17M-97:R2007, *Specification for Carbon Steel Electrodes and Fluxes for Submerged Arc Welding*

AWS A5.18/A5.18M:2005, *Specification for Carbon Steel Electrodes and Rods for Gas Shielded Arc Welding*

AWS A5.20/A5.20M:2005, *Specification for Carbon Steel Electrodes for Flux Cored Arc Welding*

AWS A5.23/A5.23M:2011, *Specification for Low-Alloy Steel Electrodes and Fluxes for Submerged Arc Welding*

AWS A5.28/A5.28M:2005, *Specification for Low-Alloy Steel Electrodes and Rods for Gas Shielded Arc Welding*

AWS A5.29/A5.29M:2010, *Specification for Low-Alloy Steel Electrodes for Flux Cored Arc Welding*

AWS D1.1/D1.1M:2015, *Structural Welding Code - Steel*

AWS D1.3/D1.3M:2008, *Structural Welding Code Sheet Steel*

American National Standard SJI 100 - 2020

User Note: The following informative references provide practical guidance in the use and application of this Specification:

Code of Federal Regulations (CFR), Occupational Safety and Health Administration (OSHA), 29 CFR Part 1926, Safety Standards for Steel Erection; Subpart R - Steel Erection; January 18, 2001, Washington, D.C.

Steel Joist Institute (SJI), Florence, SC

SJI-COSP-2015, *Code of Standard Practice for Steel Joists and Joist Girders*

Technical Digest No. 3 (2007), *Structural Design of Steel Joist Roofs to Resist Ponding Loads*

Technical Digest No. 5 (2015), *Vibration of Steel Joist-Concrete Slab Floors*

Technical Digest No. 6 (2012), *Structural Design of Steel Joist Roofs to Resist Uplift Loads*

Technical Digest No. 8 (2008), *Welding of Open Web Steel Joists and Joist Girders*

Technical Digest No. 9 (2008), *Handling and Erection of Steel Joists and Joist Girders*

Technical Digest No. 10 (2003), *Design of Fire Resistive Assemblies with Steel Joists*

Technical Digest No. 11 (2007), *Design of Lateral Load Resisting Frames Using Steel Joists and Joist Girders*

Technical Digest No. 12 (2007), *Evaluation and Modification of Open-Web Steel Joists and Joist Girders*

The Society for Protective Coatings (SSPC), *Steel Structures Painting Manual, Volume 2, Systems and Specifications*, Paint Specification No. 15, Steel Joist Shop Primer, May 1, 1999, Pittsburgh, PA.

Van Malssen, S.H. (1984), *The Effects of Arc Strikes on Steel Used in Nuclear Construction,* Welding Journal, American Welding Society, Miami, FL, July 1984.

SECTION 3.
MATERIALS

3.1 STEEL

The steel used in the manufacture of Joist Girders and K-Series, LH-Series, and DLH-Series joists shall conform to one of the following ASTM specifications:

ASTM A36/A36M, Carbon Structural Steel

ASTM A242/A242M, High-Strength Low-Alloy Structural Steel

ASTM A500/A500M, Cold-Formed Welded and Seamless Carbon Steel Structural Tubing in Rounds and Shapes

ASTM A529/A529M, High-Strength Carbon-Manganese Steel of Structural Quality

ASTM A572/A572M, High-Strength Low-Alloy Columbium-Vanadium Structural Steel

ASTM A588/A588M, High-Strength Low-Alloy Structural Steel up to 50 ksi [345 MPa] Minimum Yield Point with Atmospheric Corrosion Resistance

ASTM A606/A606M, Steel, Sheet and Strip, High-Strength, Low-Alloy, Hot-Rolled and Cold-Rolled, with Improved Atmospheric Corrosion Resistance

ASTM A992/A992M, Structural Steel Shapes

ASTM A1008/A1008M, Steel, Sheet, Cold-Rolled, Carbon, Structural, High-Strength Low-Alloy, High-Strength Low-Alloy with Improved Formability, Solution Hardened, and Bake Hardenable

ASTM A1011/A1011M, Steel, Sheet and Strip, Hot-Rolled, Carbon, Structural, High-Strength Low-Alloy, High-Strength Low-Alloy with Improved Formability, and Ultra-High Strength

ASTM A1018/A1018M, Steel, Sheet and Strip, Heavy Thickness Coils, Hot Rolled, Carbon, Structural, High-Strength Low-Alloy, Columbium or Vanadium, and High-Strength Low-Alloy with Improved Formability and Ultra-High Strength

EXCEPTION: Steel used in the manufacture of Joist Girders and K-Series, LH-Series, and DLH-Series joists shall be permitted to be of suitable quality ordered or produced to other than the listed ASTM specifications, provided that such material in the state used for final assembly and manufacture is weldable and is proven by tests performed by the producer or manufacturer to have properties, in accordance with Section 3.2.

3.2 MECHANICAL PROPERTIES

3.2.1 Minimum Yield Strength: Steel used for Joist Girders and K-Series, LH-Series, and DLH-Series joists shall have a minimum yield strength determined in accordance with one of the procedures specified in this section, which is equal to the yield strength assumed in the design.

User note: The term "Yield Strength" as used herein designates the yield level of a material as determined by the applicable method outlined in paragraph 13.1 “Yield Point”, and in paragraph 13.2 “Yield Strength”, of ASTM A370, *Standard Test Methods and Definitions for Mechanical Testing of Steel Products*, or as specified in Section 3.2.3.

Evidence that the steel furnished meets or exceeds the design yield strength shall, if requested, be provided in the form of an affidavit or by witnessed or certified test reports.

For material used without consideration of increase in yield strength resulting from cold forming, the specimens shall be taken from as-rolled material. In the case of such material, the mechanical properties of which conform to the requirements of one of the listed ASTM specifications in Section 3.1, the test specimens and procedures shall conform to those of the applicable ASTM specification and to ASTM A370.

3.2.2 Other Materials: For materials where the mechanical properties do not conform to the requirements of one of the ASTM specifications listed in Section 3.1, these materials shall conform to the following requirements:

a) The specimens shall comply with ASTM A370,
b) The specimens shall exhibit a yield strength equal to or exceeding the design yield strength,
c) The specimens shall have an elongation of not less than 20 percent in 2 inches (51 mm) for sheet strip, or 18 percent in 8 inches (203 mm) for plates, shapes and bars with adjustments for thickness for plates, shapes and bars as prescribed in either ASTM A36/A36M, A242/A242M, A500/A500M, A529/A529M, A572/A572M, A588/A588M, or A992/A992M, whichever ASTM specification is applicable, on the basis of design yield strength.
d) The number of tests for a), b), and c) above shall be as prescribed in ASTM A6/A6M for plates, shapes, and bars; and ASTM A606/A606M, A1008/A1008M and A1011/A1011M for sheet and strip.

3.2.3 As-Formed Strength: If as-formed strength is utilized, the test reports shall show the results of tests performed on full section specimens in accordance with the provisions of the AISI S100. The reports shall also indicate compliance with the following additional requirements:

a) The yield strength calculated from the test data shall equal or exceed the design yield strength.
b) Where tension tests are made for acceptance and control purposes, the tensile strength shall be at least 8 percent greater than the yield strength of the section.
c) Where compression tests are used for acceptance and control purposes, the specimen shall withstand a gross shortening of 2 percent of its original length without cracking. The length of the specimen shall be not greater than 20 times the least radius of gyration.
d) If any test specimen fails to pass the requirements of the subparagraphs (a), (b), or (c) above, as applicable, two retests shall be made of specimens from the same lot. Failure of one of the retest specimens to meet such requirements shall be the cause for rejection of the lot represented by the specimens.

3.3 WELDING ELECTRODES

3.3.1 Welding Electrodes: The welding electrodes used for arc welding shall be in accordance with the following:

a) For connected members both having a specified minimum yield strength greater than 36 ksi (250 MPa), one of the following electrodes shall be used:

AWS A5.1: E70XX
AWS A5.5: E70XX-X
AWS A5.17: F7XX–EXXX, F7XX–ECXXX flux electrode combination
AWS A5.18: ER70S-X, E70C-XC, E70C-XM
AWS A5.20: E7XT-X, E7XT-XM
AWS A5.23: F7XX–EXXX-XX, F7XX–ECXXX-XX
AWS A5.28: ER70S-XXX, E70C-XXX
AWS A5.29: E7XTX-X, E7XTX-XM

b) For connected members both having a specified minimum yield strength of 36 ksi (250 MPa) or one having a specified minimum yield strength of 36 ksi (250 MPa), and the other having a specified minimum yield strength greater than 36 ksi (250 MPa), one of the following electrodes shall be used:

AWS A5.1: E60XX
AWS A5.17: F6XX-EXXX, F6XX-ECXXX flux electrode combination
AWS A5.20: E6XT-X, E6XT-XM
AWS A5.29: E6XTX-X, E6XTX-XM
or any of those listed in Section 3.3.1(a).

3.3.2 Other Welding Methods: Other welding methods, providing equivalent strength as demonstrated by tests, shall be permitted to be used.

3.4 PAINT

The standard shop paint shall be considered an impermanent and provisional coating.

User Note: The standard shop paint is intended to protect the steel for only a short period of exposure in ordinary atmospheric conditions.

When specified, the standard shop paint shall conform to one of the following:

a) The Society for Protective Coatings, SSPC Paint Specification No. 15.

b) Or, shall be a shop paint which meets the minimum performance requirements of SSPC Paint Specification No. 15.

SECTION 4.
DESIGN AND MANUFACTURE

4.1 METHOD

Joist Girders support steel joists or other secondary members and shall be designed in accordance with this Specification as simply-supported primary load-carrying members for in-plane loading. Steel joists shall be designed in accordance with this Specification as simply-supported trusses supporting a floor or roof deck so constructed as to brace the top chord of the steel joists against lateral buckling. Where any applicable design feature is not specifically covered herein, the design shall be in accordance with the following Specifications:

a) Where the steel used consists of hot-rolled shapes, bars or plates, AISC 360.

b) For members which are cold-formed from sheet or strip steel, AISI S100.

American National Standard SJI 100 - 2020

4.1.1 Design Basis:

Steel joist and Joist Girder designs shall be in accordance with the provisions in this Specification using Load and Resistance Factor Design (LRFD) or Allowable Strength Design (ASD) as specified by the specifying professional for the project.

4.1.2 Loads, Forces and Load Combinations:

The loads and forces used for the steel joist and Joist Girder design shall be calculated by the specifying professional in accordance with the applicable building code and specified and provided on the structural drawings.

For nominal concentrated loads, which have been accounted for in the specified uniform loads, the addition of chord bending moments or an added shop or field web member due to these nominal concentrated loads shall not be required provided that the sum of the concentrated loads within a chord panel does not exceed 100 pounds and the attachments are concentric to the chord. When exact dimensional locations for concentrated loads which do not meet the above criteria are provided by the specifying professional, the joist shall be designed for the loads and load locations provided without the need for additional field applied web members at the specified locations.

The load combinations shall be specified by the specifying professional on the structural drawings in accordance with the applicable building code. In the absence of an applicable building code, the load combinations shall be those stipulated in SEI/ASCE 7 Section 2.3 and Section 2.4 as appropriate. For LRFD designs, the load combinations in SEI/ASCE 7, Section 2.3 shall apply. For ASD designs, the load combinations in SEI/ASCE 7, Section 2.4 shall apply.

4.2 DESIGN AND ALLOWABLE STRESSES

4.2.1 Design Using Load and Resistance Factor Design (LRFD)

Joists and Joist Girders shall have their components so proportioned that the required stresses, f_u, shall not exceed ϕF_n where

f_u	= required stress	ksi (MPa)
F_n	= nominal stress	ksi (MPa)
ϕ	= resistance factor	
ϕF_n	= design stress	ksi (MPa)

4.2.2 Design Using Allowable Strength Design (ASD)

Joists and Joist Girders shall have their components so proportioned that the required stresses, f, shall not exceed F_n / Ω where

f	= required stress	ksi (MPa)
F_n	= nominal stress	ksi (MPa)
Ω	= safety factor	
F_n/Ω	= allowable stress	ksi (MPa)

4.2.3 Stresses:

The calculation of design stress or allowable stress for chords shall be based on a yield strength, F_y, of the material used in manufacturing equal to 50 ksi (345 MPa). The calculation of design stress or allowable stress for all other joist elements shall be based on a yield strength, F_y, of the material used in manufacturing, but shall not be less than 36 ksi (250 MPa) nor greater than 50 ksi (345 MPa).Yield strengths greater than 50 ksi shall not be used for the design of any members.

4.2.3.1 Tension: $\phi_t = 0.90$ (LRFD), $\Omega_t = 1.67$ (ASD)

Design Stress = $0.9F_y$ (LRFD) (4.2-1)

Allowable Stress = $0.6F_y$ (ASD) (4.2-2)

4.2.3.2 Compression: $\phi_c = 0.90$ (LRFD), $\Omega_c = 1.67$ (ASD)

Design Stress = $0.9F_{cr}$ (LRFD) (4.2-3)

Allowable Stress = $0.6F_{cr}$ (ASD) (4.2-4)

Where:

For members with $k\ell/r \leq 4.71\sqrt{E/QF_y}$

$$F_{cr} = Q\left[0.658^{\left(QF_y/F_e\right)}\right]F_y \quad (4.2\text{-}5)$$

For members with $k\ell/r > 4.71\sqrt{E/QF_y}$

$$F_{cr} = 0.877F_e \quad (4.2\text{-}6)$$

Where F_e = Elastic buckling stress determined in accordance with Equation 4.2-7

$$F_e = \frac{\pi^2 E}{\left(k\ell/r\right)^2} \quad (4.2\text{-}7)$$

In the above equations, ℓ is the length, k is the effective length factor, and r is the corresponding radius of gyration of the member as defined in Section 4.3. E is equal to 29,000 ksi (200,000 MPa).

For hot-rolled sections and cold-formed angles, Q shall be taken as the full reduction factor for slender compression members as determined in accordance with AISC 360-10.

Exception: Where a compression web member is a crimped-end angle member intersecting at the first bottom chord panel point, whether hot-rolled or cold-formed, then Q shall be determined as follows:

$$Q = [5.25/(w/t)] + t \leq 1.0 \quad (4.2\text{-}8a)$$

Where: w = angle leg length, inches
t = angle leg thickness, inches

or,

$$Q = [5.25/(w/t)] + (t/25.4) \leq 1.0 \quad (4.2\text{-}8b)$$

Where: w = angle leg length, millimeters
t = angle leg thickness, millimeters

For all other cold-formed sections the method of calculating the nominal compression strength shall be in accordance with AISI S100.

4.2.3.3 Bending: $\phi_b = 0.90$ (LRFD), $\Omega_b = 1.67$ (ASD)

Bending calculations shall be based on the elastic section modulus.

For chords and web members other than solid rounds: $F_n = F_y$

Design Stress = $\phi_b F_n = 0.9F_y$ (LRFD) (4.2-9)

Allowable Stress = $F_n/\Omega_b = 0.6F_y$ (ASD) (4.2-10)

For web members of solid round cross section: $F_n = 1.6\ F_y$

Design Stress = $\phi_b F_n = 1.45F_y$ (LRFD) (4.2-11)

Allowable Stress = $F_n/\Omega_b = 0.95F_y$ (ASD) (4.2-12)

For bearing plates used in joist seats: $F_n = 1.5\ F_y$

Design Stress = $\phi_b F_n = 1.35F_y$ (LRFD) (4.2-13)

Allowable Stress = $F_n/\Omega_b = 0.90F_y$ (ASD) (4.2-14)

4.2.3.4 Weld Strength:

Shear at throat of fillet welds, flare bevel groove welds, partial joint penetration groove welds, and plug/slot welds shall be determined as follows:

Nominal Shear Stress = $F_{nw} = 0.6F_{exx}$ (4.2-15)

LRFD: $\phi_w = 0.75$

Design Shear Strength = $\phi R_n = \phi_w F_{nw} A = 0.45F_{exx} A_w$ (4.2-16)

ASD: $\Omega_w = 2.0$

Allowable Shear Strength = $R_n/\Omega_w = F_{nw}A/\Omega_w = 0.3F_{exx} A_w$ (4.2-17)

Where:

F_{exx} is determined as follows:

E70 series electrodes or F7XX-EXXX flux-electrode combinations F_{exx} = 70 ksi (483 MPa)

E60 series electrodes or F6XX-EXXX flux-electrode combinations F_{exx} = 60 ksi (414 MPa)

A_w = effective throat area, where:

For fillet welds, A_w = effective throat area

Other design methods demonstrated to provide sufficient strength by testing shall be permitted to be used.

For flare bevel groove welds, the effective weld area is based on a weld throat width, T, where:

T (inches) = 0.12D + 0.11 (4.2-18a)

Where D = web diameter, inches

or,

T (mm) = 0.12D + 2.8 (4.2-18b)

Where D = web diameter, mm

For plug/slot welds, A_w = cross-sectional area of the hole or slot in the plane of the faying surface provided that the hole or slot meets the requirements of AISC 360.

User Note: For more on plugs/slot welds see Steel Joist Institute Technical Digest No. 8, “Welding of Open-Web Steel Joists and Joist Girders”.

Strength of resistance welds and complete-joint-penetration groove or butt welds in tension or compression (only where the stress is normal to the weld axis) shall be equal to the base metal strength:

$\phi_t = \phi_c = 0.90$ (LRFD) $\quad \Omega_t = \Omega_c = 1.67$ (ASD)

Design Stress = $0.9 F_y$ (LRFD) (4.2-19)

Allowable Stress = $0.6 F_y$ (ASD) (4.2-20)

4.3 MAXIMUM SLENDERNESS RATIOS

The slenderness ratios, $1.0\ell/r$ and $1.0\ell_s/r$ of members as a whole or any component part shall not exceed the values given in Table 4.3-1, Part A.

4.3.1 Effective Slenderness Ratios: The effective slenderness ratio, $k\ell/r$ to be used in calculating the nominal stresses, F_{cr} and F'_e, is the largest value as determined from Table 4.3-1, Part B and Part C, and modified where required with equation 4.3-1. The effective length k shall be taken as 1.0 for all components in Joist Girders.

4.3.2 Compressive Members: In compression members where fillers or ties are used, they shall be spaced so that the ℓ_s/r_z ratio of each component does not exceed the governing ℓ/r ratio of the member as a whole. The terms used in Table 4.3-1 shall be defined as follows:

ℓ = length center-to-center of panel points, except ℓ = 36 inches (914 millimeters) for calculating ℓ/r_y of the top chord member for joists, and for Joist Girders this distance shall be the unbraced length between joists which are positively attached to the top chord, in. (mm).

ℓ_s = maximum length center-to-center between panel point and filler (tie), or between adjacent fillers (ties), in. (mm).

r_x = member radius of gyration about the horizontal axis of the joist or Joist Girder cross section, in. (mm).

r_y = member radius of gyration about the vertical axis of the joist or Joist Girder cross section, in. (mm).

r_z = least radius of gyration of a member component, in. (mm).

Compression web members shall be those web members subject to compressive axial loads under gravity loading.

4.3.3 Tension Members: Tension web members shall be those web members subject to tension axial loads under gravity loading, and which shall be permitted to be subject to compressive axial loads under alternate loading conditions

User Note: An example of a non-gravity alternate loading condition is net uplift.

4.3.4 Top Chords: For top chords, the end panel(s) shall be the panels between the bearing seat and the first primary interior panel point comprised of at least two intersecting web members.

4.3.5 Built-Up Web Members: For built-up web members composed of two interconnected shapes, where $\ell_s/r_z > 40$,

a modified slenderness ratio $\left(\frac{k\ell}{r_y}\right)_m$ shall replace $\frac{k\ell}{r_y}$ in equations 4.2-5, 4.2-6, and 4.2-7, where:

$$\left(\frac{k\ell}{r_y}\right)_m = \sqrt{\left(\frac{k\ell}{r_y}\right)^2 + \left(\frac{k_i \ell_s}{r_z}\right)^2} \qquad (4.3\text{-}1)$$

and,

k_i = 0.50 for angles back-to-back
= 0.75 for channels back-to-back

American National Standard SJI 100 - 2020

TABLE 4.3-1

MAXIMUM AND EFFECTIVE SLENDERNESS RATIOS[1]

Description			$k\ell/r_x$	$k\ell/r_y$	$k\ell/r_z$	$k\ell_s/r_z$
I.	TOP CHORD INTERIOR PANELS					
	A.	The slenderness ratios, $1.0\ell/r$ and $1.0\ell_s/r$, of members as a whole or any component part shall not exceed 90.				
	B.	The effective slenderness ratio for joists, $k\ell/r$, to determine F_{cr} where k is:				
		1. Two shapes with fillers or ties	0.75	0.94	---	1.0
		2. Two shapes without fillers or ties	---	---	0.75	---
		3. Single component members	0.75	0.94	---	---
	C.	For bending, the effective slenderness ratio, $k\ell/r$, to determine F'_e where k is:	0.75	---	---	---
II.	TOP CHORD END PANELS					
	A.	The slenderness ratios, $1.0\ell/r$ and $1.0\ell_s/r$, of members as a whole or any component part shall not exceed 120.				
	B.	The effective slenderness ratio for joists, $k\ell/r$, to determine F_{cr} where k is:				
		1. Two shapes with fillers or ties	1.0	0.94	---	1.0
		2. Two shapes without fillers or ties	---	---	1.0	---
		3. Single component members	1.0	0.94	---	---
	C.	For bending, the effective slenderness ratio, $k\ell/r$, to determine F'_e where k is:	1.0	---	---	---
III.	ALL BOTTOM CHORD PANELS					
	A.	The slenderness ratios, $1.0\ell/r$ and $1.0\ell_s/r$, of members as a whole or any component part shall not exceed 240.				
	B.	For members subject to compression, the effective slenderness ratio for joists, $k\ell/r$, to determine F_{cr} where k is:				
		1. Two shapes with fillers or ties	0.9	0.94	---	1.0
		2. Two shapes without fillers or ties	---	---	0.9	---
		3. Single component members	0.9	0.94	---	---
	C.	For bending, the effective slenderness ratio, $k\ell/r$, to determine F'_e where k is:	0.9	---	---	---
IV.	WEB MEMBERS					
	A.	The slenderness ratios, $1.0\ell/r$ and $1.0\ell_s/r$, of members as a whole or any component part shall not exceed 240 for a tension member or 200 for a compression member.				
	B.	For members subject to compression, the effective slenderness ratio for joists, $k\ell/r$, to determine F_{cr} where k is:				
		1. Two shapes with fillers or ties	0.75	1.0	---	1.0
		2. Two shapes without fillers or ties	---	---	1.0	---
		3. Single component members	0.75	0.9*	---	---
		*For end tension web members subject to compression, k shall equal 0.8				

(1) The effective length k shall equal 1.0 for all components of Joist Girders.

American National Standard SJI 100 - 2020

4.4 MEMBERS

4.4.1 Chords

The joist and Joist Girder bottom chord shall be designed as an axially loaded tension member.

For Joist Girders, the radius of gyration of the bottom chord about its vertical axis shall not be less than $\ell/240$ where ℓ is the distance between lines of bracing. The radius of gyration of a Joist Girder top chord about the vertical axis shall not be less than Span/575.

For steel joists, the radius of gyration of the top chord about its vertical axis shall not be less than the results of equation 4.4-1 or 4.4-2:

$$r_y \geq \ell_{br} \Big/ \left(124 + 0.67\, d_j + 28 \frac{d_j}{L} \right), \text{ in.} \qquad (4.4\text{-}1a)$$

$$r_y \geq \ell_{br} \Big/ \left(124 + 0.026\, d_j + 0.34 \frac{d_j}{L} \right), \text{ mm} \qquad (4.4\text{-}1b)$$

or,

$$r_y \geq \ell_{br} / 170 \qquad (4.4\text{-}2)$$

Where:

d_j is the steel joist depth, in. (mm)

L is the joist span length, ft. (m)

r_y is the radius of gyration of the top chord about the vertical axis of the joist cross section, in. (mm)

ℓ_{br} is the spacing in inches (millimeters) between lines of bridging as specified in Section 5.5.3.1.

A steel joist top chord shall be considered as laterally braced by the floor slab or roof deck provided the requirements of Section 5.9 are met.

A Joist Girder top chord shall be considered as laterally braced by the steel joists provided positive attachment is made. The outstanding part of the top chord member shall be designed such that the allowable reaction from a single joist shall not exceed equation 4.4-3 or 4.4-4:

$$\phi P_p \text{ and } \phi P_p\,(1.6 - f_{au}/\phi Q F_y) \qquad \text{(LRFD, } \phi = 0.9\text{)} \qquad (4.4\text{-}3)$$

$$P_p/\Omega \text{ and } P_p/\Omega\,(1.6 - \Omega f_a/Q F_y) \qquad \text{(ASD, } \Omega = 1.67\text{)} \qquad (4.4\text{-}4)$$

Where:

F_y = Specified minimum yield strength, ksi (MPa)

P_p = Plastic failure mode = $[(t^2F_y)/[2(b\text{-}k)]][g+5.66(b\text{-}k)]$, kips (N)

Q = Form factor defined in Section 4.2.3.2

b = width of the outstanding part of the top chord member, in. (mm)

$f_{au} = P_u/A$ = Required compressive stress, ksi (MPa)

$f_a = P/A$ = Required compressive stress, ksi (MPa)

g = width of bearing seat, in. (mm)

k = value from angle properties or similar dimension for other members, in (mm)

t = thickness of the outstanding part of the top chord member, in. (mm)

The top chord of a steel joist or Joist Girder shall be designed as a continuous member subject to combined axial and bending stresses, except a Joist Girder loaded only at panel points shall be designed as an axial loaded compression member. For combined stresses the top chord shall be so proportioned that:

For **LRFD**:

at the panel point:

$$f_{au}+f_{bu} \le 0.9F_y \qquad (4.4\text{-}5)$$

at the mid panel:

for, $\dfrac{f_{au}}{\phi_c F_{cr}} \ge 0.2$,

$$\frac{f_{au}}{\phi_c F_{cr}}+\frac{8}{9}\left[\frac{C_m f_{bu}}{\left[1-\left(\dfrac{f_{au}}{\phi_c F_e'}\right)\right]Q\phi_b F_y}\right] \le 1.0 \qquad (4.4\text{-}6)$$

for, $\dfrac{f_{au}}{\phi_c F_{cr}}<0.2$,

$$\frac{f_{au}}{2\phi_c F_{cr}}+\left[\frac{C_m f_{bu}}{\left[1-\left(\dfrac{f_{au}}{\phi_c F_e'}\right)\right]Q\phi_b F_y}\right] \le 1.0 \qquad (4.4\text{-}7)$$

f_{au} = P_u/A = Required compressive stress using LRFD load combinations, ksi (MPa)

P_u = Required axial strength using LRFD load combinations, kips (N)

A = Area of the top chord, in.^{2} (mm^2)

f_{bu} = M_u/S = Required bending stress at the location under consideration using LRFD load combinations, ksi (MPa)

M_u = Required flexural strength using LRFD load combinations, kip-in. (N-mm)

S = Elastic Section Modulus, in.^{3} (mm^3)

F_{cr} = Nominal axial compressive stress in ksi (MPa) based on $k\ell/r$ as defined in Section 4.3

C_m = 1 - 0.3 $f_{au}/\phi_c F'_e$ for end panels

C_m = 1 - 0.4 $f_{au}/\phi_c F'_e$ for interior panels

Q = Form factor defined in Section 4.2.3.2

ϕ_c = Resistance factor for compression = 0.9

ϕ_b = Resistance factor for flexure = 0.9

F_y = Specified minimum yield strength, ksi (MPa)

$F'_e = \dfrac{\pi^2 E}{(k\ell/r_x)^2}$, ksi (MPa),

where ℓ is the length, *k* is the effective length factor, and r_x is the corresponding radius of gyration of the member as defined in Section 4.3

E = Modulus of elasticity, 29,000 ksi (200,000 MPa)

American National Standard SJI 100 - 2020

For **ASD**:

at the panel point:

$$f_a + f_b \le 0.6F_y \qquad (4.4\text{-}8)$$

at the mid panel:

for, $\frac{f_a}{F_a} \ge 0.2$,

$$\frac{f_a}{F_a} + \frac{8}{9}\left[\frac{C_m f_b}{\left[1-\left(\frac{1.67f_a}{F'_e}\right)\right]QF_b}\right] \le 1.0 \qquad (4.4\text{-}9)$$

for $\frac{f_a}{F_a} < 0.2$,

$$\left(\frac{f_a}{2F_a}\right) + \left[\frac{C_m f_b}{\left[1-\left(\frac{1.67f_a}{F'_e}\right)\right]QF_b}\right] \le 1.0 \qquad (4.4\text{-}10)$$

f_a = P/A required compressive stress using ASD load combinations, ksi (MPa)

A = Area of the top chord, in.^{2} (mm^2)

P = Required axial strength using ASD load combinations, kips (N)

f_b = M/S = required bending stress at the location under consideration using ASD load combinations, ksi (MPa)

S = Elastic Section Modulus, in.^{3} (mm^3)

M = Required flexural strength using ASD load combinations, k-in. (N-mm)

F_a = Allowable axial compressive stress based on $k\ell/r$ as defined in Section 4.3; $0.6F_{cr}$, ksi (MPa)

F_b = Allowable bending stress; $0.6F_y$, ksi (MPa)

C_m = 1 - 0.50 f_a/F'_e for end panels

C_m = 1 - 0.67 f_a/F'_e for interior panels

Q = Form factor defined in Section 4.2.3.2

F'_e = $\frac{\pi^2 E}{(k\ell/r_x)^2}$, ksi (MPa),

where ℓ is the length, *k* is the effective length factor, and r_x is the corresponding radius of gyration of the member as defined in Section 4.3

E = Modulus of elasticity, 29,000 ksi (200,000 MPa)

The top chord and bottom chord shall be designed such that at each joint complies with equation 4.4-11 or 4.4-12:

$$f_{vmod} \le \phi_v F_n \qquad \text{(LRFD, } \phi_v = 1.00\text{)} \qquad (4.4\text{-}11)$$

$$f_{vmod} \le F_n/\Omega_v \qquad \text{(ASD, } \Omega_v = 1.50\text{)} \qquad (4.4\text{-}12)$$

F_n = nominal shear stress = $0.6F_y$, ksi (MPa)
f_t = axial stress = P/A, ksi (MPa)
f_v = shear stress = V/bt, ksi (MPa)
f_{vmod} = modified shear stress = $\left(\frac{1}{2}\right)\sqrt{f_t^2+4f_v^2}$
b = length of vertical part(s) of cross section, in. (mm)
t = thickness of vertical part(s) of cross section, in. (mm)

It shall not be necessary to design the top chord and bottom chord for the modified shear stress, f_{vmod}, where a round bar web member is continuous through a joint. The minimum required shear of section 4.4.2 (25 percent of the maximum end reaction) shall not be required when evaluating Equation 4.4-11 or 4.4-12.

KCS Joist, K-Series, chords shall be designed for a flat positive bending moment envelope where the moment capacity is constant at all interior panels. The top chord end panel(s) shall be designed for an axial load based on the force in the first tension web resulting from the specified shear. A uniform load of 550 plf (8.02 kN/m) in ASD or 825 plf (12.03 kN/m) in LRFD shall be used to check bending in the end panel(s). The top chord interior panels shall be designed for an axial stress resulting from the constant moment capacity plus the bending stress. The bending stress shall be determined from the smaller uniform load derived from the constant moment and constant shear, not to exceed 550 plf (ASD) or 825 plf (LRFD). The constant moment and shear shall be those values as listed in the Standard Load Table for KCS Steel Joists.

4.4.2 Web

The vertical shears to be used in the design of the web members shall be determined by including all loads, but such vertical shears shall be not less than 25 percent of the maximum end reaction from the design load combinations.

4.4.2.1 Redundant Web Members: Redundant web members used in modified Warren type web systems shall be designed to resist the gravity loads supported by the member plus an additional axial load of ½ of 1.0 percent of the top chord axial force. For a **Joist Girder**, this total axial load shall not be less than 2 percent of the top chord axial force.

4.4.2.2 Joist Girders: For Joist Girders, the tension web members shall be designed to resist at least 25 percent of their axial force in compression.

4.4.2.3 KCS Joist Web Forces: KCS Joist web forces shall be determined based on a flat shear envelope, and the following:

a) All webs shall be designed for a vertical shear equal to the specified shear capacity.
b) All webs shall be designed for 100 percent stress reversal except for the first tension web which remains in tension under all simple span gravity loads.

4.4.2.4 Single Component Web Member: In those cases where a single component web member is attached to the outside of the stem of a tee or double angle chord or any other orientation of a single web member which creates an out-of-plane moment, the web member design shall account for the stresses due to eccentricity.

4.4.2.4.1 Uncrimped Single Angle Web Members

For 1 inch uncrimped single angle web members where one leg is placed flat against one chord member in the gap, the resulting eccentricities and the effects in loading shall be considered in the design. A minimum of 50 percent of the required weld shall be deposited to each chord angle.

For angles subjected to tensile loading, the following requirements shall be met:

For **LRFD**: combined axial and bending stresses shall be proportioned in accordance with Eq. 4.4-5.

For **ASD**: combined axial and bending stresses shall be proportioned in accordance with Eq. 4.4-8.

For angles subjected to compression loading, the following requirements shall be met:

For **LRFD**:

at the panel point, combined axial and bending stresses shall be proportioned in accordance with Eq. 4.4-5.

at the mid length, the strength shall meet Eqs. 4.4-6 or 4.4-7, and 4.4-13:

$$\frac{f_{au}}{\phi_c F_{crz}} \le 1.0 \qquad (4.4\text{-}13)$$

where

f_{au} = P_u/A = Required tensile or compressive stress, ksi (MPa)

P_u = Required axial strength using LRFD load combinations, kips (N)

A = Area of the uncrimped angle web, in.^{2}, (mm^2)

f_{bu} = M_u/S = required bending stress, ksi (MPa)

M_u = Required flexural strength = $0.5 P_u \left(\frac{\text{chord gap}}{2} - \bar{y} \right)$, kip-in. (N-mm)

S = Minimum Elastic Section Modulus, in.^{3} (mm^3)

F_{cr} = F_{crx}, ksi (MPa)

F_{crx} = Nominal axial compressive stress in ksi (MPa) based on $k\ell/r_x$, where ℓ is the length, k is the effective length factor, and r_x is the corresponding radius of gyration of the member as defined in Section 4.3

F_{crz} = Nominal axial compressive stress in ksi (MPa) based on $k\ell/r_z$ where k = 1.0

C_m = 1.0

F_y = Specified minimum yield strength, ksi (MPa)

F'_e = $\frac{\pi^2 E}{(k\ell/r_x)^2}$, ksi (MPa)

Q = Form factor defined in Section 4.2.3.2

For **ASD**:

at the panel point, combined axial and bending stresses shall be proportioned in accordance with Eq. 4.4-8.

at the mid length the strength shall meet Eqs. 4.4-9 or 4.4-10, and 4.4-14:

$$\frac{f_a}{F_{az}} \leq 1.0 \qquad (4.4\text{-}14)$$

where

f_a = P/A = Required tensile or compressive stress, ksi (MPa)

P = Required axial strength using ASD load combinations, kips (N)

A = Area of the uncrimped angle web, in.^{2}, (mm^2)

f_b = M/S = required bending stress, ksi (MPa)

S = Minimum Elastic Section Modulus, in.^{3} (mm^3)

M = Required flexural strength = $0.5P\left(\frac{\text{chord gap}}{2} - \overline{y}\right)$, kip-in. (N-mm)

F_a = F_{ax}, ksi (MPa)

F_{ax} = Nominal axial compressive stress in ksi (MPa) based on $k\ell/r_x$, where ℓ is the length, k is the effective length factor, and r_x is the corresponding radius of gyration of the member as defined in Section 4.3

F_{az} = Nominal axial compressive stress in ksi (MPa) based on $K\ell/r_z$, where k = 1.0

F_b = Allowable bending stress; $0.6F_y$, ksi (MPa)

Alternate methods of design shall be permitted provided they provide strength equal to or greater than those given. Alternate design procedures shall be submitted to the Steel Joist Institute's consulting engineer for approval.

4.4.3 Fillers and Ties

Fillers or ties added on chord or web compression members shall be designed and connected for a force equal to 2 percent of the required member axial force.

4.4.4 Joist and Joist Girder Extensions

Joist and Joist Girder extensions shall be designated as one of three extension types, as follows: top chord extensions (TCX), extended ends, or full depth cantilevers.

Design criteria for joist extensions shall be specified using one of the following methods:

a) A joist top chord extension (TCX), extended end, or full depth cantilevered end shall be designed for the load from the Standard Load Tables based on the design length and designation of the specified joist. In the absence of other design information, the joist manufacturer shall design the joist extension for this loading as a default.

b) A loading diagram shall be provided for the joist extension, extended end, or full depth cantilevered end. The diagram shall include the magnitude and location of the loads to be supported, as well as the applicable load combinations.

c) 2½" deep steel joist extensions shall be permitted to be specified using extension designations found in the Top Chord Extension Load Table (S Type) for TCXs or the Top Chord Extension Load Table (R Type) for extended ends.

Any deflection requirements or limits due to the accompanying loads and load combinations on the steel joist or Joist Girder extension shall be provided by the specifying professional, regardless of the method used to specify the extension. Unless otherwise specified, the joist manufacturer shall check the extension for the specified deflection limit under uniform live load acting simultaneously on both the joist base span and the extension.

The joist manufacturer shall consider the effects of steel joist or Joist Girder extension loading on the base span of the steel joist or Joist Girder. This shall include carrying the design bending moment due to the loading on the extension into the top chord end panel(s), and the effect on the overall steel joist or Joist Girder chord and web axial forces. In the case of a K-Series Standard Type 'R' Extended End or 'S' TCX, the design bending moment shall be determined by the tabulated extension section modulus (S) multiplied by the appropriate allowable (ASD) or design (LRFD) flexural stress.

Bracing of extensions shall be clearly indicated on the structural drawings.

4.5 CONNECTIONS

4.5.1 Methods

Member connections and splices shall be made by attaching the members to one another by arc or resistance welding or other accredited methods in accordance with the following:

a) Steel joist and Joist Girder arc welded joints shall be in accordance with the American Welding Society, "Structural Welding Code-Steel", D1.1, and/or the "Structural Welding Code Sheet Steel", D1.3 with the following seven modified acceptance criteria as permitted by AWS D1.1 Clause 6.8:

1) Undercut shall not exceed 1/16 inch (2 mm) for welds oriented parallel to the principal stress.

User Note: The typical diagonal web member connection to one leg of a chord angle is considered to be parallel to the principal stress.

2) Discontinuities outside of the weld design length shall be permitted provided no cracks exist and undercut does not exceed the limits of item 1).

User Note: The weld design length is the minimum weld length needed for the connection force and weld thickness. Portions of the actual weld length with imperfections or discontinuities such as porosity or lack of a full profile are not included when comparing the actual weld length to the weld design length.

3) One unrepaired arc strike shall be permitted per joint provided it does not result in other unacceptable defects.

User Note: Minor arc strikes do not reduce the strength of AWS Group II materials (refer to Van Malssen, 1984).

4) The effective throat for flare bevel groove welds shall be calculated in accordance with equation 4.2-18.

User Note: The effective weld throat used by the SJI with round bars is based on SJI research and is more conservative than AWS D1.1 for GMAW for round bars in excess of 9/16" (14 mm). See Steel Joist Institute Technical Digest 8, "Welding of Open Web Steel Joists and Joist Girders".

5) Tack welds that are discontinuous from other welds shall meet the criteria for undercut, but shall be exempt from all other acceptance criteria.

User Note: Joist manufacturers use tack welds in the assembly process, and so long as they do not diminish the strength of the base metal and are not incorporated into the final weld for strength, they are not required to meet other inspection criteria.

6) The weld profile shall be considered acceptable provided neither the weld leg nor the weld throat is undersized less than AWS D1.1 limits within the weld design length.

7) For material with thickness less than 1/8", AWS D1.1 or D1.3 shall be considered appropriate.

User Note: AWS D1.1 does not address thicknesses less than 1/8" for hot rolled material and AWS D1.3 does not address hot rolled material, thus SJI has extended the ranges to include these material thicknesses.

b) Steel joist and Joist Girder resistance welded joints shall follow a preproduction validation procedure and a production checking procedure and shall meet the strength requirements of this Specification.

User Note: Spot, flash or upset resistance welds should have a written welding procedure qualification record and a systematic quality plan. For further information, see Steel Joist Institute Technical Digest 8, "Welding of Open Web Steel Joists and Joist Girders".

c) Welded Connections for Crimped-End Angle Web Members

1) The connection of each end of a crimped angle web member to each side of the chord shall consist of a weld group made of more than a single line of weld. The design weld length shall include an end return of no less than two times the nominal weld size.

d) Welding Program

1) The manufacturer's welders shall be qualified in accordance with either AWS D1.1 or AWS D1.3 for the applicable weld type, position, and material.

2) Manufacturers shall have a program for establishing weld procedures and operator qualification, and for weld sampling and testing. Each manufacturing facility shall have trained inspectors, and an engineer responsible for all welding procedures.

e) Weld Inspection by Outside Agencies (See Section 5.14)

1) The agency shall arrange for visual inspection to determine that welds meet the acceptance standards of Section 4.5.1.

User Note: Ultrasonic, X-ray, and magnetic particle testing are inappropriate for joists due to the configurations of the components and welds.

4.5.2 Strength

4.5.2.1 Joint Connections: Joint connections shall develop the maximum force due to any of the design loads, but not less than 50 percent of the strength of the member in tension or compression, whichever force is the controlling factor in the selection of the member.

4.5.2.2 Shop Splices: Shop splices shall be permitted to occur at any point in chord or web members. Splices shall be designed for the member force, but not less than 50 percent of the member strength. All component parts comprising the cross section of the chord or web member (including reinforcing plates, rods, etc.) at the point of the splice shall develop a nominal tensile strength of at least 1.2 times the product of the yield strength and the full design area of the chord or web. The "full design area" shall be defined as the minimum required area such that the required stress will be less than the design (LRFD) or allowable (ASD) stress.

User Note: For more information on welding, see Steel Joist Institute Technical Digest 8, "Welding of Open Web Steel Joists and Joist Girders".

4.5.3 Field Splices

Field Splices shall be designed by the manufacturer and shall be either bolted or welded. Splices shall be designed for the member force, but not less than 50 percent of the member strength.

4.5.4 Eccentricity

Members connected at a joint shall have their center of gravity lines meet at a point, where practical. Ends of joists or Joist Girders shall be proportioned to resist bending produced by eccentricity at the support.

For a single component web member, the eccentricity shall be permitted to be neglected where it does not exceed the lesser of three-quarters of the over-all dimension of the chord or 2" (51 mm). This eccentricity, measured in the plane of the joist, shall be the perpendicular distance from the centroidal axis of that web member to the point on the centroidal axis of the chord which is vertically above or below the intersection of the centroidal axis of the web member(s) forming the joint in accordance with Figure 4.5-1.

For a web member composed of at least two shapes, the eccentricity on either side of the neutral axis of chord members, measured in the plane of the joist at the joint work point, shall be permitted to be neglected where the web intersect point does not exceed one and one-half times the distance between the neutral axis and the back of the chord in accordance with Figure 4.5-2.

If these limits are exceeded, provision shall be made for the stresses due to eccentricity.

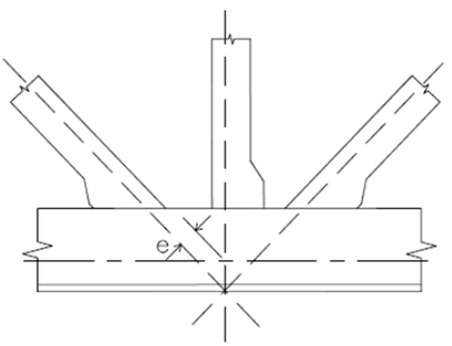

FIGURE 4.5-1

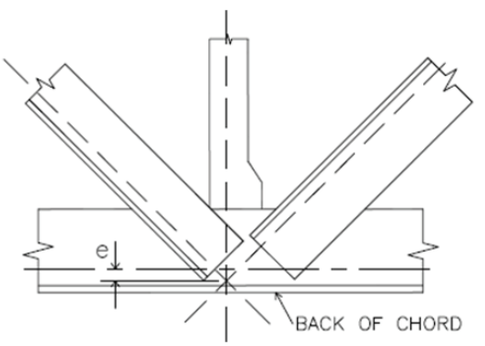

FIGURE 4.5-2

4.6 CAMBER

Steel joists and Joist Girders 100'-0" or less shall have a manufactured camber in accordance with Table 4.6-1:

TABLE 4.6-1

TOP CHORD LENGTH		APPROXIMATE CAMBER	
20'-0″	(6096 mm)	1/4″	(6 mm)
30'-0″	(9144 mm)	3/8″	(10 mm)
40'-0″	(12192 mm)	5/8″	(16 mm)
50'-0″	(15240 mm)	1″	(25 mm)
60'-0″	(18288 mm)	1 1/2″	(38 mm)
70'-0″	(21336 mm)	2″	(51 mm)
80'-0″	(24384 mm)	2 3/4″	(70 mm)
90'-0″	(27432 mm)	3 1/2″	(89 mm)
100'-0″	(30480 mm)	4 1/4″	(108 mm)

For lengths exceeding 100'-0", manufactured camber equal to Span/300 shall be used.

User Note: The specifying professional shall give consideration to coordinating this approximate camber with adjacent framing.

4.7 VERIFICATION OF DESIGN AND MANUFACTURE

User Note: This Section is included as part of this Specification since the verification of design and manufacture is a requirement of any Steel Joist Institute member company in order to be in compliance with this Specification. This Section applies only to a Steel Joist Institute member manufacturer.

4.7.1 Design Calculations

Companies manufacturing any K-Series, LH-Series, DLH-Series Joists or Joist Girders shall submit design data to the Steel Joist Institute, or an independent agency approved by the Steel Joist Institute, for verification of compliance with this Specification. Design data shall be submitted in detail and in the format specified by the Steel Joist Institute.

4.7.2 Tests of Chord and Web Members

Each manufacturer shall, at the time of design review by the Steel Joist Institute, verify by tests that the design, in accordance with Section 4.1 through Section 4.5, provides the theoretical strength of critical members. Such tests shall be evaluated considering the actual yield strength of the members of the test joists.

Material tests for determining mechanical properties of component members shall be conducted.

4.7.3 Tests of Joints and Connections

Each manufacturer shall, at the time of design review by the Steel Joist Institute, verify by shear tests on representative joints of typical joists that connections will meet the provision of Section 4.5.2. Chord and web members shall be permitted to be reinforced for such tests.

4.7.4 In-Plant Inspections

Each manufacturer shall verify their ability to manufacture K-Series, LH-Series, DLH-Series Joists and Joist Girders through periodic In-Plant Inspections. Inspections shall be performed by an independent agency approved by the Steel Joist Institute. The frequency, manner of inspection, and manner of reporting shall be determined by the Steel Joist Institute. The plant inspections shall not represent a guarantee of the quality of any specific joists; this responsibility shall lie fully and solely with the individual manufacturer.

SECTION 5.
APPLICATION

5.1 USAGE

5.1.1 Scope: This Specification shall apply to any type of structure where floors or roofs are to be supported directly by steel joists installed as hereinafter specified or where steel joists are to be supported directly by Joist Girders installed as hereinafter specified. Where joists or Joist Girders are used other than on simple spans under uniformly distributed loading for joists, or under equal concentrated gravity loading for Joist Girders, as prescribed in Section 4.1, they shall be designed to limit the required stresses to those listed in Section 4.2. The magnitude and location of all loads and forces to be considered in the joist or Joist Girder design shall be provided on the structural drawings.

5.1.2 Continuous Frame Action: Where a rigid connection of the bottom chord is to be made to a column or other structural support, the steel joist or Joist Girder is then no longer simply-supported, and the system shall be investigated for continuous frame action by the specifying professional. The specifying professional shall design the supporting structure, including the design of columns, connections, and moment plates. This design shall account for the stresses caused by lateral forces and the stresses due to connecting the bottom chord to the column or other structural support.

The designed detail of a rigid type connection and moment plates shall be shown on the structural drawings by the specifying professional. The moment plates shall be furnished by other than the joist manufacturer.

User Note: For further reference concerning continuous frame action and their connections, refer to Steel Joist Institute Technical Digest No. 11, “Design of Lateral Load Resisting Frames Using Steel Joists and Joist Girders”.

5.2 SPAN

Except for joist substitutes, the span of a joist or Joist Girder shall not exceed 24 times the depth. Design length shall equal the span minus 4 inches (102 mm) as shown in Figure 5.2-1 “Definition of Span”.

Figure 5.2-1
DEFINITION OF SPAN
(U. S. Customary Units)

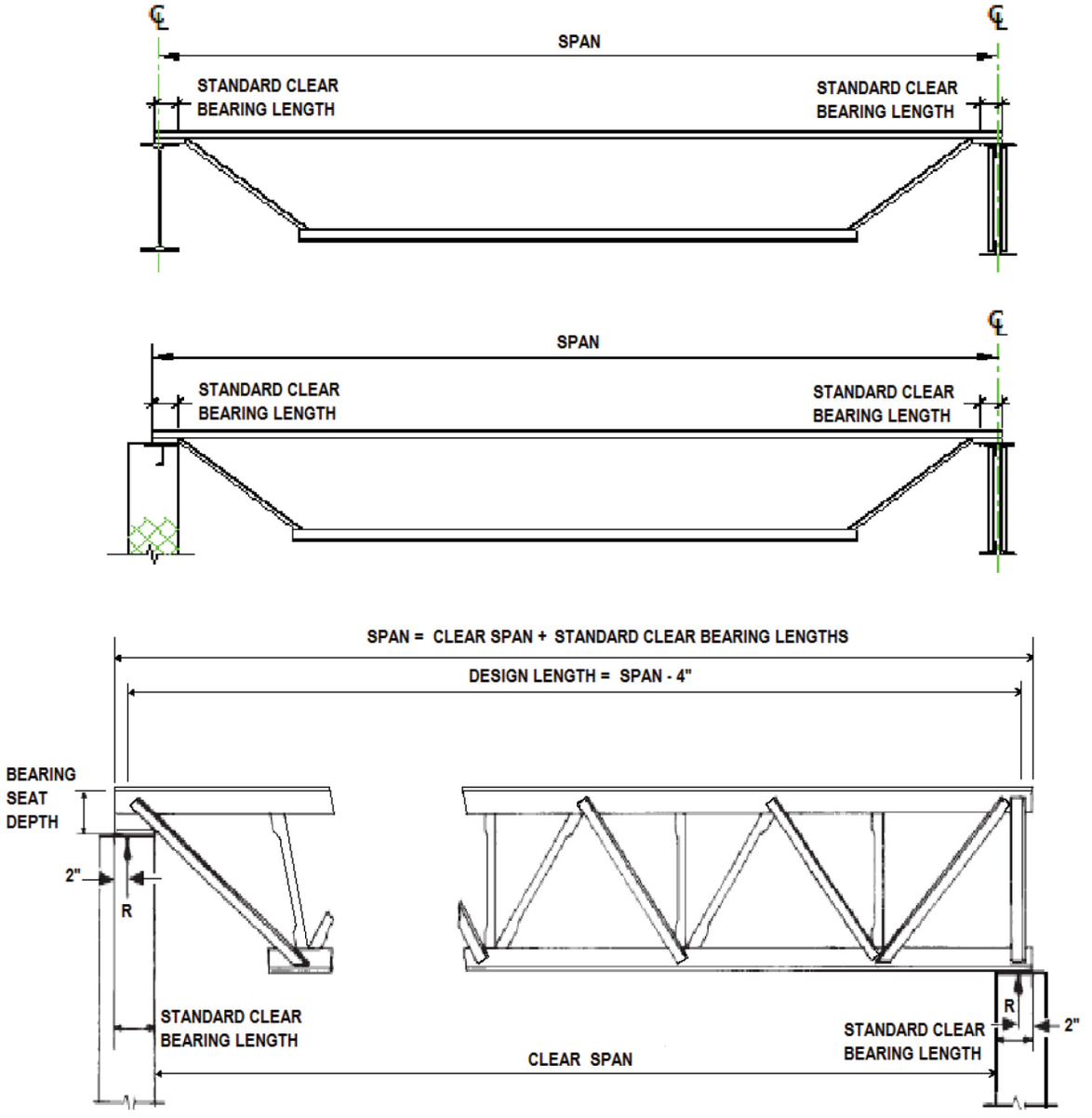

NOTES:
1) DESIGN LENGTH = SPAN - 4"
2) MINIMUM BEARING LENGTHS SHALL MEET THE REQUIREMENTS OF SECTION 5.4. BEARING LENGTHS SHOWN MAY VARY BETWEEN STANDARD CLEAR BEARING AND MINIMUM BEARING LENGTH.
3) PARALLEL CHORD JOISTS INSTALLED TO A SLOPE GREATER THAN 1/2 INCH PER FOOT SHALL USE A SPAN DEFINED BY THE LENGTH ALONG THE SLOPE.

American National Standard SJI 100 - 2020

5.3 DEPTH

Steel joists or Joist Girders shall have either parallel chords or a top chord pitch of up to 1/2 inch per foot (1:24). The steel joist or Joist Girder designation depth or nominal depth shall be the depth at mid-span, except for double pitched joists which shall be the depth at the ridge.

5.4 END SUPPORTS

Consideration of the reactions, vertical and lateral, shall be taken by the specifying professional in the design of the steel support, or the steel bearing plate on masonry or concrete. The standard location of the end reaction shall be 2" (51 mm) from the end of the span (exclusive of extensions) at each end of the steel joist or Joist Girder as shown in Figure 5.2-1 "Definition of Span". The standard end reaction location shall require the minimum bearing lengths shown in Table 5.4-1.

TABLE 5.4-1

JOIST SECTION NUMBER[1]	STANDARD CLEAR BEARING LENGTH	MINIMUM BEARING LENGTH ON STEEL
K1-12	4" (102 mm)	2 ½" (64 mm)
LH02-06	6" (152 mm)	2 ½" (64 mm)
LH07-17, DLH10-17, JG	6" (152 mm)	4" (102 mm)
LH/DLH18-25, JG[2]	6" (152 mm)	6" (152 mm)

(1) Last digit(s) of joist designation shown in Load Table.
(2) **Joist Girders** with a self weight greater than 50 plf (0.73 kN/m).

If the specifying professional requires the end reaction to be located at a distance from the face of support more than the standard clear bearing length values shown in Table 5.4-1 minus 2" (51 mm), the structural drawings shall indicate the required special location of the end reaction. The seat depth shall also be increased to the special minimum bearing seat depth per Table 5.4-3.

5.4.1 Masonry and Concrete

5.4.1.1 Scope: A K-Series, LH-Series, DLH-Series Joist or Joist Girder end supported by masonry or concrete shall bear on steel bearing plates and shall be designed as steel bearing.

5.4.1.2 Bearing Length: The ends of K-Series Joists shall extend a distance of not less than 4 inches (102 mm) over the face of masonry or concrete support unless it is deemed necessary to bear less than 4 inches (102 mm) over the support. The ends of LH-Series, DLH-Series Joists and Joist Girders shall extend a distance of not less than 6 inches (152 mm) over the face of masonry or concrete support unless it is deemed necessary to bear less than 6 inches (152 mm) over the support.

5.4.1.3 Anchorage: K-Series, **LH**-Series, **DLH**-Series Joists and **Joist Girders** shall be anchored to the steel bearing plate per Section 5.7.

The steel bearing plate shall be located not more than 1/2 inch (13 mm) from the face of the wall. If the steel bearing plate is located more than 1/2 inch (13 mm) from the face of the wall, or the minimum bearing over the masonry or concrete support cannot be provided as shown in Table 5.4-1, special consideration shall be given to the design of the steel bearing plate and the masonry or concrete by the specifying professional.

The steel bearing plate width shall not be less than that shown in Table 5.4-2 perpendicular to the length of the joist. The plate is to be designed by the specifying professional and shall be furnished by other than the joist manufacturer.

TABLE 5.4-2

JOIST SECTION NUMBER[1]	MINIMUM BEARING PLATE WIDTH
K1-12, LH02-06	7” (178 mm)
LH07-17, DLH10-17, JG	9” (229 mm)
LH/DLH18-25, JG[2]	14” (356 mm)

(1) Last digit(s) of joist designation shown in Load Table.
(2) Joist Girders with a self weight greater than 50 plf (0.73 kN/m).

5.4.2 Steel

The ends of K-Series, LH-Series, DLH-Series Joists and Joist Girders shall be anchored to the support per Section 5.7.

5.4.3 Bearing Depth

The standard non-sloping bearing seat depths shall be as shown in Table 5.4-3. If the steel joist slopes 3/8 inch per foot or greater, the high end bearing seat shall require additional depth due to the slope.

User Note: The Steel Joist Institute Code of Standard Practice provides guidance for determining additional seat depth requirements for sloped joists.

TABLE 5.4-3

JOIST SECTION NUMBER[1]	STANDARD BEARING SEAT DEPTH	STANDARD CLEAR BEARING LENGTH	SPECIAL MINIMUM BEARING SEAT DEPTH[2]
K1-12	2 ½” (64 mm)	4” (102 mm)	0.6 x (RP + 2 ½” (64 mm))
LH02-17, DLH10-17	5” (127 mm)	6” (152 mm)	0.6 x (RP + 4” (102 mm))
LH/DLH18-25	7 ½” (191 mm)	6” (152 mm)	0.6 x (RP + 4“ (102 mm)) + 2 ½” (64 mm)
JG	7 ½” (191 mm)	6” (152 mm)	RP + 4” (102 mm)

(1) Last digit(s) of joist designation shown in Load Table.
(2) RP is equal to the distance the reaction is to occur from the face of the wall or leading edge of support member. The equation is not applicable for the high end of a sloped joist or Joist Girder.

When the specifying professional requires the steel joist or Joist Girder reaction to occur at or near the centerline of the wall or other support, a special bearing seat depth shall be required and a note shall be placed on the structural drawings identifying where the reaction is to occur. The specified bearing seat depth shall be increased according to Table 5.4-3 to allow for this special requirement.

5.5 BRIDGING or BRACING

Joist Girders shall be proportioned such that they can be erected without bridging. Therefore, the following requirements shall be met:

a) The ends of the bottom chord shall be restrained from lateral movement to brace the girder from overturning. For Joist Girders at columns in steel frames, restraint shall be provided by a stabilizer plate on the column.

b) No other loads shall be placed on the Joist Girder until the steel joists bearing on the Joist Girder are in place and positively attached to the Joist Girder.

American National Standard SJI 100 - 2020

User Note: See Section 5.12 for bridging or bracing required for uplift forces.

Steel joist top and bottom chord bridging shall be required and shall consist of one or both of either horizontal or diagonal bridging.

5.5.1 Horizontal Bridging

Horizontal bridging lines shall consist of continuous horizontal steel members. The ℓ/r ratio of the bridging member shall not exceed 300, where ℓ is the distance in inches (millimeters) between attachments and r is the least radius of gyration of the bridging member.

5.5.2 Diagonal Bridging

Diagonal bridging lines shall consist of cross-bracing with a ℓ/r ratio of not more than 200, where ℓ is the distance in inches (millimeters) between connections and r is the least radius of gyration of the bracing member. Where cross-bracing members are connected at their point of intersection, the ℓ distance shall be taken as the distance in inches (millimeters) between connections at the point of intersection of the bridging members and the connections to the chords of the joists.

5.5.2.1 Diagonal Erection Bridging

User Note: Joists exhibit varying degrees of stability dependent upon the span, depth, member sizes, self weight and other parameters. Bolted diagonal Erection Bridging which must be installed prior to releasing hoisting cables may be required.

Where required as identified below, bolted diagonal Erection Bridging shall be required and shall be in accordance with the following:

(a) For joist spans up through and including 60 feet (18288 mm) in length;

Welded horizontal bridging shall be permitted except where the row of bridging nearest the center is required to be bolted diagonal Erection Bridging as indicated by the **Red** shaded area in the Load Tables. Hoisting cables shall not be released until this row of bolted diagonal Erection Bridging is completely installed and anchored.

Bolted diagonal Erection Bridging shall be provided as required in the SJI Load Tables wherever a standard SJI Section Number designation is specified. For spans 60 feet (18288mm) or less, in the absence of a standard SJI Section Number designation, minimum bolted diagonal Erection Bridging requirements shall be determined by:

1) Matching the joist design to an equivalent standard SJI Section Number designation to determine the span at which Erection Bridging is needed as designated in the tables; or
2) Using Equation 5.5-1 to determine the joist stability and the need for Erection Bridging.

$$W = \frac{-b + \sqrt{b^2 - 4 \cdot a \cdot c}}{2 \cdot a} \quad ; \qquad \text{If , } \frac{w_u}{w_{actual}} > 1.00 \text{ Erection Bridging is not required.} \qquad (5.5\text{-}1)$$

$$a = \left(\frac{\pi^2 + 3}{24} \right)^2$$

$$b = P \cdot \frac{\pi^2 + 3}{12} \cdot \frac{\pi^2 + 4}{16} - \frac{\pi^4 \cdot E \cdot I_y}{2 \cdot (k \cdot L)^3} \cdot \left[\beta_x \cdot \left(\frac{\pi^2 - 3}{24} \right) - \frac{y_o}{2} \right]$$

$$c = (P)^2 \left(\frac{\pi^2 + 4}{16} \right)^2 - \frac{\pi^4 \cdot E \cdot I_y}{2 \cdot (k \cdot L)^3} \cdot \left[P \cdot \left(\beta_x \cdot \frac{\pi^2 - 4}{16} - a_e \right) + \frac{\pi^4 \cdot E \cdot C_w}{2 \cdot (k \cdot L)^3} + \frac{\pi^2 \cdot G \cdot J}{2 \cdot k \cdot L} \right]$$

Where:

P = Factored weight of erector = 1.2 x (assumed weight of 250 lbs.) = 300 lbs. (1334 N)

E = Modulus of elasticity= 29,000,000 psi (200,000 MPa)

I_y = Joist moment of inertia about y-axis, in.^{4} (mm^4) $\quad I_y = I_{yt} + I_{yb}$

I_{yt} = Top chord moment of inertia about y-axis, in.^{4} (mm^4)

I_{yb} = Bottom chord moment of inertia about y-axis, in.^{4} (mm^4)

L = Joist Span, in. (mm)

k = Effective length factor = 0.85

β_x = Cross-Sectional parameter $\quad \beta_x = \frac{1}{I_x}\left[A_b \cdot (d_e - y)^3 - A_t \cdot y^3\right] - 2 \cdot y_o$

A_b = Area of bottom chord, in.^{2} (mm^2)

A_t = Area of top chord, in.^{2} (mm^2)

d_e = Joist effective depth, in.(mm) $\quad d_e = d - y_t - y_b$

y_t = Neutral axis of top chord, in. (mm)

y_b = Neutral axis of bottom chord, in. (mm)

y = Distance from centroid of top chord to centroid of cross section, in. (mm) $\quad y = \frac{A_b \cdot d_e}{A_t + A_b}$

I_x = Joist moment of inertia about x-axis, in.^{4} (mm^4) $\quad I_x = A_t y^2 + A_b (d_e - y)^2$

y_o = Distance from centroid of cross section to shear center, in. (mm) $\quad y_o = -y + \frac{I_{yb} \cdot d_e}{I_y}$

a_e = Vertical location of load P from shear center (locate at joist center of gravity), in. (mm), where $a_e = y_o$

C_w = Warping constant $\quad C_w = \frac{d_e^{\,2} \cdot I_{yb} \cdot I_{yt}}{I_y}$

G = Shear modulus, psi (MPa) $\quad G = 0.385E$

J = St. Venant torsion constant, in.^{4} (mm^4) $\quad J = \frac{1}{3}\left(A_t \cdot t_t^{\,2} + A_b \cdot t_b^{\,2}\right)$

t_t = Thickness of top chord, in. (mm)

t_b = Thickness of top chord, in. (mm)

w_u = Ultimate lateral buckling load $\quad w_u = \frac{W \cdot 12}{L}$, plf $\quad w_u = \frac{W}{L}$, (kN/m)

w_{actual} = Joist self-weight, plf (kN/m)

b) For joist spans greater than 60 feet (18288 mm) in length;
Bolted diagonal Erection Bridging shall be used as indicated by the **Blue** and Gray shaded areas of the Load Tables. Hoisting cables shall not be released until all rows of bolted diagonal Erection Bridging are completely installed and anchored. Where the joist spacing is less than 0.70 x joist depth, bolted horizontal bridging shall be used in addition to bolted diagonal Erection Bridging.

c) The bolted diagonal Erection Bridging determined by Section 5.5.2.1a and Section 5.5.2.1b shall be considered a minimum. This bolted diagonal Erection Bridging shall be indicated on the placement plans.

User Note: Joists with special profiles having a higher center of gravity as compared to a parallel chord joist, joists which are canted, or joists having any condition which may create instability, may require additional bridging and/or special erection methods.

5.5.3 Quantity and Spacing of Bridging

5.5.3.1 Scope: Bridging shall be properly spaced and anchored to support the decking and the employees prior to the attachment of the deck to the top chord. The maximum spacing between lines of bridging, ℓ_{brmax} shall be the lesser of,

$$\ell_{brmax} = \left(124 + 0.67\, d_j + 28\frac{d_j}{L}\right) r_y \text{, in.} \quad (5.5\text{-}2a)$$

$$\ell_{brmax} = \left(124 + 0.026\, d_j + 0.34\frac{d_j}{L}\right) r_y \text{, mm} \quad (5.5\text{-}2b)$$

or,
$$\ell_{brmax} = 170\, r_y \quad (5.5\text{-}3)$$

Where:

d_j is the steel joist depth, in. (mm)

L is the joist span length, ft. (m)

r_y is the radius of gyration of the top chord about the vertical axis of the joist cross section, in. (mm)

5.5.3.2 Number of Rows: The number of rows of top chord bridging shall not be less than as shown in Table 5.5-1 and the spacing shall meet the requirements of Equations 5.5-2 and 5.5-3. The number of rows of bottom chord bridging, including bridging required per Section 5.12, shall not be less than the number of top chord rows. Rows of bottom chord bridging shall be permitted to be spaced independently of rows of top chord bridging. The spacing of rows of bottom chord bridging shall meet the slenderness requirement of Section 4.3 and any specified strength requirements.

5.5.3.3 DLH Joist Section 21 and Greater: For DLH-Series joist Section Number 21 and greater, bridging shall be installed near a bottom chord panel point or an extra web member shall be furnished to brace the bottom chord for the vertical component of the bridging force equal to the horizontal bracing force.

American National Standard SJI 100 - 2020

TABLE 5.5-1

U.S. CUSTOMARY UNITS

NUMBER OF ROWS OF TOP CHORD BRIDGING[2]

Section Number[1]	Joist Depth	1 Row	2 Rows	3 Rows	4 Rows	5 Rows	6 Rows	7 Rows	8 Rows	9 Rows
K1	All	17	>17 to 26	>26 to 28						
K2	All	21	>21 to 30	>30 to 32						
K3	All	18	>18 to 26	>26 to 40						
K4	All	20	>20 to 30	>30 to 41	>41 to 48					
K5	12K to 24K	20	>20 to 30	>30 to 42	>42 to 48					
	26K	28	>28 to 41	> 41 to 52						
K6	14K to 24K	20	>20 to 31	>31 to 42	>42 to 48					
	26K & 28K	28	>28 to 41	>41 to 54	>54 to 56					
K7	16K to 24K	23	>23 to 34	>34 to 48						
	26K to 30K	29	>29 to 44	>44 to 60						
K8	24K	25	>25 to 39	>39 to 48						
	26K to 30K	29	>29 to 44	>44 to 60						
K9	16K to 24K	22	>22 to 34	>34 to 48						
	26K to 30K	29	>29 to 44	>44 to 60						
K10	18K to 24K	22	>22 to 38	>38 to 48						
	26K to 30K	29	>29 to 48	>48 to 60						
K11	22K	24	>24 to 39	>39 to 44						
	30K	34	>34 to 49	>49 to 60						
K12	24K	25	>25 to 43	>43 to 48						
	26K to 30K	29	>29 to 47	>47 to 60						
LH02-03	All	20	>20 to 30	>30 to 40	>40					
LH04-05	All	22	>22 to 33	>33 to 44	>44 to 55	>55				
LH06-08	All	26	>26 to 45	>45 to 60	>60 to 75	>75				
LH09	All	26	>26 to 48	>48 to 64	>64 to 80	>80				
LH/DLH10	All	28	>28 to 54	>54 to 72	>72 to 90	>90				
LH/DLH11	All	30	>30 to 54	>54 to 72	>72 to 90	>90 to 108	>108			
LH/DLH12	All	34	>34 to 55	>55 to 74	>74 to 92	>92 to 111	>111			
LH/DLH13	All	36	>36 to 63	>63 to 84	>84 to 105	>105 to 126	>126			
LH/DLH14	All	38	>38 to 64	>64 to 86	>86 to 107	>107 to 129	>129			
LH/DLH15	All	42	>42 to 73	>73 to 98	>98 to 122	>122 to 147	>147			
LH/DLH 16-17	All	44	>44 to 75	>75 to 100	>100 to 125	>125 to 150	>150 to 175	>175		
LH/DLH 18-20	All	52	>52 to 78	>78 to 104	>104 to 130	>130 to 156	>156 to 182	>182 to 208	>208 to 234	>234
LH/DLH 21-25	All	60	>60 to 90	>90 to 120	>120 to 150	>150 to 180	>180 to 210	>210		

(1) Last digit(s) of joist designation shown in Load Table.

(2) Distances are Joist Span lengths in feet – See "Definition of Span" Figure 5.2-1. Refer to the Joist Load Table and Specification Section 6 for required bolted diagonal bridging and additional stability requirements. See Section 5.12 for additional bridging required for uplift design.

5.5.4 Sizing of Bridging

Horizontal and diagonal bridging shall be capable of resisting the nominal unfactored horizontal compressive force, P_{br} given in Equation 5.5-4.

$$P_{br} = 0.0025\ n\ A_t\ F_{construction}\ ,\ \text{kips (N)} \qquad (5.5\text{-}4)$$

Where:

n = 8 for horizontal bridging

n = 2 for diagonal bridging

A_t = cross sectional area of joist top chord, in.^{2} (mm^2)

$F_{construction}$ = assumed ultimate stress in top chord to resist construction loads, determined in accordance with the following:

$$F_{construction} = \left(\frac{\pi^2 E}{\left(\frac{0.9\,\ell_{brmax}}{r_y} \right)^2} \right) \geq 12.2\,\text{ksi} \qquad (5.5\text{-}5a)$$

$$F_{construction} = \left(\frac{\pi^2 E}{\left(\frac{0.9\,\ell_{brmax}}{r_y} \right)^2} \right) \geq 84.1\,\text{MPa} \qquad (5.5\text{-}5b)$$

Where:

E = Modulus of Elasticity of steel = 29,000 ksi (200,000 MPa)

and $\frac{\ell_{brmax}}{r_y}$ is determined from Equations 5.5-2 or 5.5-3

The bridging nominal horizontal unfactored compressive forces, P_{br}, shall be in accordance with Table 5.5-2.

TABLE 5.5-2

BRIDGING NOMINAL HORIZONTAL UNFACTORED COMPRESSIVE FORCE					
JOIST SECTION NUMBER[1]	HORIZONTAL BRIDGING P_{br} (n=8)		REQUIRED BRIDGING CONNECTION WELD[2]	DIAGONAL BRIDGING P_{br} (n=2)	
	Lbs.	(N)	In.	Lbs.	(N)
K1-8	340	(1512)	1/8" x 1" (3mm x 25mm)	85	(378)
K9-10, LH02-03	450	(2002)		113	(503)
K11-12, LH04-05	560	(2491)		140	(623)
LH06-08	750	(3336)		188	(836)
LH09	850	(3781)		213	(945)
LH/DLH10	900	(4003)		225	(1001)
LH/DLH11	950	(4226)		238	(1056)
LH/DLH12	1100	(4893)		275	(1223)
LH/DLH13	1200	(5338)		300	(1334)
LH/DLH14	1300	(5783)		325	(1446)
LH/DLH15	1450	(6450)		363	(1612)
LH/DLH16-17	1850	(8229)	1/8" x 1 ½ " (3mm x 38mm)	463	(2057)
LH/DLH18-20	2350	(10453)		585	(2602)
LH/DLH21-22	3150	(14012)	1/8" x 2" (3mm x 51mm)	790	(3514)
LH/DLH23-24	4130	(18371)	1/8" x 3" (3mm x 76mm)	1035	(4604)
LH/DLH25	4770	(21218)		1195	(5316)

(1) Last digit(s) of joist designation shown in Load Table.
(2) Or other connection type designed for the required force.

5.5.5 Connections

Connections to the joist chords shall be made by welding or mechanical means and shall be capable of resisting the unfactored or nominal horizontal force, P_{br}, of Equation 5.5-4 but not less than 700 pounds (3114 N).

5.5.6 Bottom Chord Bearing Joists

Where bottom chord bearing joists are utilized, a row of diagonal bridging shall be provided near the support(s). This bridging shall be installed and anchored before the hoisting cable(s) is released.

5.6 INSTALLATION OF BRIDGING

Bridging shall support the top and bottom chords against lateral movement during the construction period and shall hold the steel joists in the approximate position as shown on the joist placement plans.

The ends of all bridging lines terminating at walls or beams shall be anchored thereto.

American National Standard SJI 100 - 2020

5.7 BEARING SEAT ATTACHMENTS

5.7.1 Masonry and Concrete

Ends of K-Series, LH-Series, and DLH-Series Joists and Joist Girders resting on steel bearing plates on masonry or structural concrete shall be attached thereto, as shown in Table 5.7-1, with a minimum of two fillet welds, or with two bolts, or the equivalent.

5.7.2 Steel

Ends of K-Series, LH-Series, and DLH-Series Joists and Joist Girders resting on steel supports shall be attached thereto, as shown in Table 5.7-1, with a minimum of two fillet welds, or with two bolts, or the equivalent. Where K-Series, LH-Series and DLH-Series Joists and Joist Girders are used to provide lateral stability to the supporting member, the final connection shall be made by welding or as designated by the specifying professional.

TABLE 5.7-1

JOIST SECTION NUMBER [1]	MINIMUM FILLET WELD	MINIMUM BEARING SEAT BOLTS FOR ERECTION
K1-12	2– 1/8” x 2 1/2” (3 x 64 mm)	2– 1/2” (13 mm) A307
LH02-06	2– 3/16” x 2 1/2” (5 x 64 mm)	
LH07-17, DLH10-17, JG	2– 1/4” x 2 1/2” (6 x 64 mm)	2– 3/4” (19 mm) A307
LH/ DLH18-25, JG[2]	2– 1/4” x 4” (6 x 102 mm)	2– 3/4” (19 mm) A325

(1) Last digit(s) of joist designation shown in load table.
(2) Joist Girders with a self weight greater than 50 plf (0.73 kN/m).

5.7.3 Uplift

Where uplift forces are a design consideration, roof joists shall be anchored to resist such forces and shall meet the requirements of Section 5.12.

5.8 JOIST SPACING

Joists shall be spaced so that the loading on each joist does not exceed the design load (LRFD or ASD) for the particular joist designation and span as shown in the applicable load tables.

5.9 FLOOR AND ROOF DECKS

5.9.1 Material

Floor and roof decks shall be permitted to consist of cast-in-place or pre-cast concrete or gypsum, cold-formed steel, wood, or other suitable material capable of supporting the required load at the specified joist spacing.

5.9.2 Thickness

Cast-in-place slabs shall be not less than 2 inches (51 mm) thick.

5.9.3 Centering

Centering for cast-in-place slabs shall be permitted to be ribbed metal lath, corrugated steel sheets, paper-backed welded wire fabric, removable centering or any other suitable material capable of supporting the slab at the designated joist spacing.

Centering shall not cause lateral displacement or damage to the top chord of joists during installation or removal of the centering or placing of the concrete.

5.9.4 Bearing

Slabs or decks shall bear uniformly along the top chords of the joists.

5.9.5 Attachments

The spacing of attachments along the joist top chord shall not exceed 36 inches (914 mm). Such attachments of the slab or deck to the top chords of joists shall be capable of resisting the forces given in Table 5.9-1.

TABLE 5.9-1

JOIST SECTION NUMBER[1]	NOMINAL FORCE REQUIRED[2]
K1-12	100 lbs/ft. (1.46 kN/m)
LH02-04	120 lbs/ft. (1.75 kN/m)
LH05-09	150 lbs/ft. (2.19 kN/m)
LH/DLH10-17	200 lbs/ft. (2.92 kN/m)
LH/DLH18-19	250 lbs/ft. (3.65 kN/m)
LH/DLH20-21	300 lbs/ft. (4.38 kN/m)
LH/DLH22-24	420 lbs/ft. (6.13 kN/m)
LH/DLH25	520 lbs/ft. (7.59 kN/m)
(1) Last digit(s) of joist designation shown in Load Table. (2) Nominal bracing force is unfactored.	

5.9.6 Wood Nailers

Where wood nailers are used, such nailers in conjunction with deck or slab shall be firmly attached to the top chords of the joists in conformance with Section 5.9.5.

5.9.7 Joist With Standing Seam Roofing or Laterally Unbraced Top Chords

Where the roof systems do not provide lateral stability for the steel joists in accordance with Section 5.9.5 sufficient stability shall be provided to brace the steel joists laterally under the full design load. For this condition, the compression chord design shall include the effects of both the in-plane and out-of-plane buckling of the steel joist (e.g., buckling about the vertical axis of the steel joist cross section). In any case where the attachment requirement of Section 5.9.5 is not achieved, out-of-plane strength shall be achieved by adjusting the bridging spacing and/or increasing the compression chord area and the y-axis radius of gyration. The effective slenderness ratio about the vertical axis equals $0.94\ L/r_y$; where L is the bridging spacing in inches (millimeters) and r_y is the radius of gyration of the top chord in inches (millimeters). The maximum bridging spacing shall not exceed that specified in Section 5.5.3.

User Note: Some examples of roof systems which may not provide adequate top chord lateral stability may be standing seam roofs, skylights, or other openings which do not provide top chord attachments per Section 5.9.5.

Horizontal bridging members attached to the compression chords and their anchorages shall be designed for a compressive axial force, P_{br}, given in Equation 5.9-1.

$$P_{br} = 0.001nP + 0.004P\sqrt{n} \geq 0.0025nP, \text{ kips (N)} \quad (5.9\text{-}1)$$

Where n is the number of joists between end anchors and P is the chord design force in kips (N)

The attachment force between the horizontal bridging member and the compression chord shall be 0.01P. Horizontal bridging attached to the tension chords shall be proportioned so that the slenderness ratio between attachments does not exceed 300. Diagonal bridging shall be proportioned so that the slenderness ratio between attachments does not exceed 200.

5.10 DEFLECTION

The deflection due to the design live load shall not exceed the following:

Floors: 1/360 of span.
Roofs: 1/360 of span where a plaster ceiling is attached or suspended, or
1/240 of span for all other cases.

The specifying professional shall give consideration to the effects of deflection and vibration in the selection of joists.

User Note: For further information on vibration, refer to Steel Joist Institute Technical Digest 5, “Vibration of Steel Joist-Concrete Slab Floors".

5.11 PONDING

The ponding investigation shall be performed by the specifying professional.

User Note: For further reference, refer to Steel Joist Institute Technical Digest 3, “Structural Design of Steel Joist Roofs to Resist Ponding Loads” and AISC 360.

5.12 UPLIFT

Where uplift forces due to wind are a design requirement, these forces shall be indicated on the structural drawings in terms of NET uplift in pounds per square foot (Pascals). The structural drawings shall indicate if the net uplift is based upon an LRFD or ASD load combination. When these forces are specified, they shall be considered in the design of joists, Joist Girders, and required bridging or bracing. Wherever uplift due to wind forces is a design consideration, the following shall be required:

a) For joists, a single line of **bottom chord** bridging shall be provided near the first bottom chord panel points.

b) For **Joist Girders**, if the ends of the bottom chord are not strutted and extended to column stabilizer plates, bracing shall be provided near the first bottom chord panel points.

User Note: For further reference, refer to Steel Joist Institute Technical Digest 6, “Structural Design of Steel Joist Roofs to Resist Uplift Loads”.

5.13 DIAPHRAGMS AND COLLECTORS

Where diaphragm collector forces due to wind or seismic forces are a design requirement, these forces shall be indicated on the structural drawings. The structural drawings shall indicate the nominal (unfactored) forces. The structural drawings shall also indicate the Seismic Design Category, and the Seismic Force Resisting System type, and applicable seismic design coefficients. When this data is specified, joist collectors or chords in horizontal diaphragm systems, shall be designed in conformance with the provisions of Section 4 through Section 6. End connections and splices in joists incorporated into Seismic Force Resisting System (SFRS) as horizontal diaphragms as collectors or chords shall adhere to the requirements stipulated by the applicable building code.

5.14 INSPECTION

Joists shall be inspected by the manufacturer before shipment to verify compliance of materials and workmanship with the requirements of this Specification.

User Note: If the purchaser requires an inspection of the steel joists or Joist Girders by someone other than the manufacturer's own inspectors, they shall be permitted to reserve the right to do so in their "Invitation to Bid" or the accompanying "Job Specifications". Arrangements shall be made with the manufacturer for such inspection of the joists or Joist Girders at the manufacturing shop by the purchaser's inspectors at purchaser's expense.

5.15 PARALLEL CHORD SLOPED JOISTS AND JOIST GIRDERS

The span of a parallel chord sloped joist or Joist Girder shall be defined by the length along the slope. Minimum depth, load-carrying capacity, and bridging requirements shall be determined by the sloped definition of span. The Load Table capacity shall be the component normal to the joist.

SECTION 6
ERECTION STABILITY AND HANDLING

As a minimum, erection stability and handling of joists and Joist Girders shall meet the requirements of this Section 6.

User Note: Additional requirements for erection of steel joists and Joist Girders can be found in Steel Joist Institute Technical Digest No. 9, “Handling and Erection of Steel Joists and Joist Girders”.

6.1 STABILITY REQUIREMENTS

User Note: It is not recommended that an erector climb on unbridged joists, extreme caution shall be exercised since unbridged joists exhibit some degree of instability under the erector's weight.

a) In steel framing, where joists/Joist Girders are utilized at column lines, the joist/Joist Girder shall be field-bolted at the column. Before hoisting cables are released and before an employee is allowed on the joists/Joist Girder the following conditions shall be met:
   1) The seat at each end of the joist/Joist Girder is attached in accordance with Section 5.7. Where a bolted seat connection is used for erection purposes, as a minimum, the bolts shall be snug tightened. The snug tight condition shall be defined as the tightness that exists where all plies of a joint are in firm contact. This shall be attained by a few impacts of an impact wrench or the full effort of an employee using an ordinary spud wrench.
   2) Where stabilizer plates are required the joist/Joist Girder bottom chord shall engage the stabilizer plate.

   During the construction period, the contractor shall provide means for the adequate distribution of loads so that the carrying capacity of any joist or Joist Girder is not exceeded.

b) Before an employee is allowed on the steel joist: BOTH ends of joists at columns (or joists designated as column joists) shall be attached to its supports. For all other joists a minimum of one end shall be attached before the employee is allowed on the joist. The attachment shall be in accordance with Section 5.7.

   Where a bolted seat connection is used for erection purposes, as a minimum, the bolts shall be snug tightened. The snug tight condition shall be defined as the tightness that exists where all plies of a joint are in firm contact. This shall be attained by a few impacts of an impact wrench or the full effort of an employee using an ordinary spud wrench.

c) On steel joists that do not require erection bridging as shown by either the unshaded area of the Load Tables or as determined by Section 5.5.2.1, only one employee shall be allowed on the steel joist until all bridging is installed and anchored.

d) Where the span of the steel joist is within the Red shaded area of the Load Table, or in the absence of a standard SJI Section Number designation and Erection Bridging is required in accordance with Section 5.5.2.1, the following shall apply:

1) The row of bridging nearest the midspan of the steel joist shall be bolted diagonal Erection Bridging; and
2) Hoisting cables shall not be released until this bolted diagonal Erection Bridging is installed and anchored, unless an alternate method of stabilizing the joist has been provided; and
3) No more than one employee shall be allowed on these spans until all other bridging is installed and anchored.

e) Where the span of the steel joist is within the Blue shaded area of the Load Table, the following shall apply:

1) All rows of bridging shall be bolted diagonal bridging; and
2) Hoisting cables shall not be released until the two rows of bolted diagonal Erection Bridging nearest the third points of the steel joist are installed and anchored; and
3) No more than two employees shall be allowed on these spans until all bridging is installed and anchored.

f) Where the span of the steel joist is in the Gray shaded area of the Load Table, the following shall apply:

1) All rows of bridging shall be bolted diagonal bridging; and
2) Hoisting cables shall not be released until all bridging is installed and anchored; and
3) No more than two employees shall be allowed on these spans until all other bridging is installed and anchored.

g) Where permanent bridging terminus points cannot be used during erection, additional temporary bridging terminus points shall be required to provide lateral stability.

h) In the case of bottom chord bearing joists, the ends of the joist shall be restrained laterally per Section 5.5.6 before releasing the hoisting cables.

i) After the joist is straightened and plumbed, and all bridging is completely installed and anchored, the ends of the joists shall be fully connected to the supports in accordance with Section 5.7.

6.2 LANDING AND PLACING LOADS

a) Except as stated in Section 6.2(d), no "construction loads" shall be allowed on the steel joists until all bridging is installed and anchored, and all joist bearing ends are attached.

User Note: For definition of "construction load" see Code of Federal Regulations (CFR), Occupational Safety and Health Administration (OSHA), 29 CFR Part 1926, Safety Standards for Steel Erection; Subpart R - Steel Erection, §1926.751 Definitions; January 18, 2001, Washington, D.C.

b) During the construction period, loads placed on the steel joists shall be distributed so as not to exceed the capacity of the steel joists.

c) The weight of a bundle of joist bridging shall not exceed a total of 1000 pounds (454 kilograms). The bundle of joist bridging shall be placed on a minimum of three steel joists that are secured at one end. The edge of the bridging bundle shall be positioned within 1 foot (0.30 m) of the secured end.

d) No bundle of deck shall be placed on steel joists until all bridging has been installed and anchored and all joist bearing ends attached, unless the following conditions are met:

1) The contractor has first determined from a "qualified person" and documented in a site-specific erection plan that the structure or portion of the structure is capable of supporting the load;
2) The bundle of decking is placed on a minimum of three steel joists;

3) The joists supporting the bundle of decking are attached at both ends;
4) At least one row of bridging is installed and anchored;
5) The total weight of the decking does not exceed 4000 pounds (1816 kilograms); and
6) The edge of the bundle of decking is placed within 1 foot (0.30 meters) of the bearing surface of the joist end.

User Note: For definition of "qualified person" see Code of Federal Regulations (CFR), Occupational Safety and Health Administration (OSHA), 29 CFR Part 1926, Safety Standards for Steel Erection; Subpart R - Steel Erection, §1926.751 Definitions; January 18, 2001, Washington, D.C.

e) The edge of the construction load shall be placed within 1 foot (0.30 meters) of the bearing surface of the joist end.

6.3 FIELD WELDING

All field welding shall be performed in accordance with the structural drawings. Field welding shall not damage the joists or Joist Girders.

On cold-formed steel members whose yield strength has been attained by cold working, and whose as-formed strength is used in the design, the total length of weld at any one point shall not exceed 50 percent of the overall developed width of the cold-formed section.

6.4 HANDLING

Particular attention shall be considered for the handling and erection of K-Series, LH-Series, DLH-Series steel joists and Joist Girders. Damage to the joists and accessories shall be avoided. Hoisting cables shall be attached at panel point locations and those locations shall be selected to minimize erection stresses.

Each joist shall be adequately braced laterally before any loads are applied. If lateral support is provided by bridging, the bridging lines as defined in Section 6.1(c), 6.1(d), 6.1(e), and 6.1(f) shall be anchored to prevent lateral movement.

6.5 FALL ARREST SYSYTEMS

Steel joists and Joist Girders shall not be used as anchorage points for a fall arrest system unless written direction to do so is obtained from a "qualified person".

User Note: For definition of "qualified person" see Code of Federal Regulations (CFR), Occupational Safety and Health Administration (OSHA), 29 CFR Part 1926, Safety Standards for Steel Erection; Subpart R - Steel Erection, §1926.751 Definitions; January 18, 2001, Washington, D.C.

American National Standard SJI 100 - 2020

STANDARD LRFD LOAD TABLE

OPEN WEB STEEL JOISTS, K-SERIES

Based on a 50 ksi (345 MPa) Maximum Yield Strength
Adopted by the Steel Joist Institute May 1, 2000
Revised to May 18, 2010 – Effective December 31, 2010

The **BLACK** figures in the Load Table give the TOTAL safe factored uniformly distributed load-carrying capacities, in pounds per linear foot, of **LRFD** K-Series Steel Joists.

The approximate joist weights, in pounds per linear foot (kiloNewtons per meter), given in the Load Table may be added to the other building weights to determine the unfactored DEAD load. In all cases the factored DEAD load, including the joist self-weight, must be deducted from the TOTAL load to determine the factored LIVE load. The approximate joist weights do not include accessories.

The **RED** figures in the Load Table represent the unfactored uniform load, in pounds per linear foot (kiloNewtons per meter), which will produce an approximate joist deflection of 1/360 of the span. This load can be linearly prorated to obtain the unfactored uniform load for supplementary deflection criteria (i.e. an unfactored uniform load which will produce a joist deflection of 1/240 of the span may be obtained by multiplying the **RED** figures by 360/240). In no case shall the prorated, unfactored load exceed the unfactored TOTAL load-carrying capacity of the joist as given in the Standard **ASD** Load Table for Open Web Steel Joists, K-Series.

Where the joist span is in the **RED SHADED** area of the Load Table, the row of bridging nearest the mid span shall be diagonal bridging with bolted connections at chords and intersections. Hoisting cables shall not be released until this row of bolted diagonal bridging is completely installed. The **RED SHADED** area extends up through 60'–0" (18288 mm).

The approximate gross moment of inertia (not adjusted for shear deformation) of a standard joist listed in the Load Table may be determined as follows:

$I_j = 26.767(W)(L^3)(10^{-6})$ in^4 or $2.6953(W)(L^3)(10^{-5})$ mm^4, where W= **RED** figure in the Load Table, and
L = (span – 0.33) in feet or (span – 102) in millimeters

The TOTAL safe factored uniformly distributed load-carrying capacities, in pounds per linear foot (kiloNewtons per meter), of **LRFD** K-Series Steel Joists shall not exceed 825 plf (12.03 kN/m) for spans shorter than what is explicitly shown in the Load Table. The maximum prorated unfactored RED load shall not exceed 550 plf (8.02 kN/m) (the TOTAL load-carrying capacity of the joist as given in the Standard **ASD** Load Table for Open Web Steel Joists, K-Series).

Loads for span increments not explicitly given in the Load Table may be determined using linear interpolation between the load values given in adjacent span columns.

For the proper handling of concentrated and/or varying loads, see Section 2.4 in the Code of Standard Practice for Steel Joist and Joist Girders.

LRFD

STANDARD LOAD TABLE FOR OPEN WEB STEEL JOISTS, K-SERIES
Based On A 50 ksi Maximum Yield Strength - Loads Shown In Pounds Per Linear Foot (plf)

Joist Designation	10K1	12K1	12K3	12K5	14K1	14K3	14K4	14K6	16K2	16K3	16K4	16K5	16K6	16K7	16K9
Depth (in.)	10	12	12	12	14	14	14	14	16	16	16	16	16	16	16
Approx. Wt (lbs./ft.)	5.0	5.0	5.7	7.1	5.2	6.0	6.7	7.7	5.5	6.3	7.0	7.5	8.1	8.6	10.0
Span (ft.) ↓															
10	825 550														
11	825 542														
12	825 455	825 550	825 550	825 550											
13	718 363	825 510	825 510	825 510											
14	618 289	750 425	825 463	825 463	825 550	825 550	825 550	825 550							
15	537 234	651 344	814 428	825 434	766 475	825 507	825 507	825 507							
16	469 192	570 282	714 351	825 396	672 390	825 467	825 467	825 467	825 550	825 550	825 550	825 550	825 550	825 550	825 550
17	415 159	504 234	630 291	825 366	592 324	742 404	825 443	825 443	768 488	825 526	825 526	825 526	825 526	825 526	825 526
18	369 134	448 197	561 245	760 317	528 272	661 339	795 397	825 408	684 409	762 456	825 490	825 490	825 490	825 490	825 490
19	331 113	402 167	502 207	681 269	472 230	592 287	712 336	825 383	612 347	682 386	820 452	825 455	825 455	825 455	825 455
20	298 97	361 142	453 177	613 230	426 197	534 246	642 287	787 347	552 297	615 330	739 386	825 426	825 426	825 426	825 426
21		327 123	409 153	555 198	385 170	483 212	582 248	712 299	499 255	556 285	670 333	754 373	822 405	825 406	825 406
22		298 106	373 132	505 172	351 147	439 184	529 215	648 259	454 222	505 247	609 289	687 323	747 351	825 385	825 385
23		271 93	340 116	462 150	321 128	402 160	483 188	592 226	415 194	462 216	556 252	627 282	682 307	760 339	825 363
24		249 81	312 101	423 132	294 113	367 141	442 165	543 199	381 170	424 189	510 221	576 248	627 269	697 298	825 346
25					270 100	339 124	408 145	501 175	351 150	390 167	469 195	529 219	576 238	642 263	771 311
26					249 88	313 110	376 129	462 156	324 133	360 148	433 173	489 194	532 211	592 233	711 276
27					231 79	289 98	349 115	427 139	300 119	334 132	402 155	453 173	493 188	549 208	658 246
28					214 70	270 88	324 103	397 124	279 106	310 118	373 138	421 155	459 168	510 186	612 220
29									259 95	289 106	348 124	391 139	427 151	475 167	570 198
30									241 86	270 96	324 112	366 126	399 137	444 151	532 178
31									226 78	252 87	304 101	342 114	373 124	415 137	498 161
32									213 71	237 79	285 92	321 103	349 112	388 124	466 147

LRFD

STANDARD LOAD TABLE FOR OPEN WEB STEEL JOISTS, K-SERIES
Based On A 50 ksi Maximum Yield Strength - Loads Shown In Pounds Per Linear Foot (plf)

Joist Designation	18K3	18K4	18K5	18K6	18K7	18K9	18K10	20K3	20K4	20K5	20K6	20K7	20K9	20K10	22K4	22K5	22K6	22K7	22K9	22K10	22K11
Depth (In.)	18	18	18	18	18	18	18	20	20	20	20	20	20	20	22	22	22	22	22	22	22
Approx. Wt. (lbs./ft.)	6.4	7.2	7.7	8.4	8.9	10.1	11.6	6.5	7.2	7.7	8.4	8.9	10.1	11.6	7.3	7.7	8.5	9.0	10.2	11.7	11.9
Span (ft.) ↓																					
18	825	825	825	825	825	825	825														
	550	550	550	550	550	550	550														
19	771	825	825	825	825	825	825	825	825	825	825	825	825	825							
	494	523	523	523	523	523	523	550	550	550	550	550	550	550							
20	694	825	825	825	825	825	825	775	825	825	825	825	825	825							
	423	490	490	490	490	490	490	517	550	550	550	550	550	550							
21	630	759	825	825	825	825	825	702	825	825	825	825	825	825	825	825	825	825	825	825	825
	364	426	460	460	460	460	460	453	520	520	520	520	520	520	550	550	550	550	550	550	550
22	573	690	777	825	825	825	825	639	771	825	825	825	825	825	825	825	825	825	825	825	825
	316	370	414	438	438	438	438	393	461	490	490	490	490	490	548	548	548	548	548	548	548
23	523	630	709	774	825	825	825	583	703	793	825	825	825	825	777	825	825	825	825	825	825
	276	323	362	393	418	418	418	344	402	451	468	468	468	468	491	518	518	518	518	518	518
24	480	577	651	709	789	825	825	535	645	727	792	825	825	825	712	804	825	825	825	825	825
	242	284	318	345	382	396	396	302	353	396	430	448	448	448	431	483	495	495	495	495	495
25	441	532	600	652	727	825	825	493	594	669	729	811	825	825	657	739	805	825	825	825	825
	214	250	281	305	337	377	377	266	312	350	380	421	426	426	381	427	464	474	474	474	474
26	408	492	553	603	672	807	825	456	549	618	673	750	825	825	606	682	744	825	825	825	825
	190	222	249	271	299	354	361	236	277	310	337	373	405	405	338	379	411	454	454	454	454
27	378	454	513	558	622	747	825	421	508	573	624	694	825	825	561	633	688	768	825	825	825
	169	198	222	241	267	315	347	211	247	277	301	333	389	389	301	337	367	406	432	432	432
28	351	423	477	519	577	694	822	391	472	532	579	645	775	825	522	588	640	712	825	825	825
	151	177	199	216	239	282	331	189	221	248	269	298	353	375	270	302	328	364	413	413	413
29	327	394	444	483	538	646	766	364	439	495	540	601	723	825	486	547	597	664	798	825	825
	136	159	179	194	215	254	298	170	199	223	242	268	317	359	242	272	295	327	387	399	399
30	304	367	414	451	502	603	715	340	411	462	504	561	675	799	453	511	556	619	745	825	825
	123	144	161	175	194	229	269	153	179	201	218	242	286	336	219	245	266	295	349	385	385
31	285	343	387	421	469	564	669	318	384	433	471	525	631	748	424	478	520	580	697	825	825
	111	130	146	158	175	207	243	138	162	182	198	219	259	304	198	222	241	267	316	369	369
32	267	322	363	396	441	529	627	298	360	406	442	492	592	702	397	448	489	544	654	775	823
	101	118	132	144	159	188	221	126	147	165	179	199	235	276	180	201	219	242	287	337	355
33	252	303	342	372	414	498	589	280	339	381	415	463	556	660	373	421	459	511	615	729	798
	92	108	121	131	145	171	201	114	134	150	163	181	214	251	164	183	199	221	261	307	334
34	237	285	321	349	390	468	555	264	318	358	391	435	523	621	352	397	432	481	579	687	774
	84	98	110	120	132	156	184	105	122	137	149	165	195	229	149	167	182	202	239	280	314
35	223	268	303	330	367	441	523	249	300	339	369	411	493	585	331	373	408	454	546	648	741
	77	90	101	110	121	143	168	96	112	126	137	151	179	210	137	153	167	185	219	257	292
36	211	253	286	312	348	417	495	235	283	319	348	388	466	553	313	354	385	429	516	612	700
	70	82	92	101	111	132	154	88	103	115	125	139	164	193	126	141	153	169	201	236	269
37								222	268	303	330	367	441	523	297	334	364	406	487	579	663
								81	95	106	115	128	151	178	116	130	141	156	185	217	247
38								211	255	286	312	348	418	496	280	316	345	384	462	549	628
								74	87	98	106	118	139	164	107	119	130	144	170	200	228
39								199	241	271	297	330	397	471	267	300	327	364	438	520	595
								69	81	90	98	109	129	151	98	110	120	133	157	185	211
40								190	229	258	282	313	376	447	253	285	310	346	417	495	565
								64	75	84	91	101	119	140	91	102	111	123	146	171	195
41															241	271	295	330	396	471	538
															85	95	103	114	135	159	181
42															229	259	282	313	378	448	513
															79	88	96	106	126	148	168
43															219	247	268	300	360	427	489
															73	82	89	99	117	138	157
44															208	235	256	286	343	408	466
															68	76	83	92	109	128	146

LRFD

STANDARD LOAD TABLE FOR OPEN WEB STEEL JOISTS, K-SERIES
Based On A 50 ksi Maximum Yield Strength - Loads Shown In Pounds Per Linear Foot (plf)

Joist Designation	24K4	24K5	24K6	24K7	24K8	24K9	24K10	24K12	26K5	26K6	26K7	26K8	26K9	26K10	26K12
Depth (In.)	24	24	24	24	24	24	24	24	26	26	26	26	26	26	26
Approx. Wt. (lbs./ft.)	7.8	7.9	8.5	9.0	9.4	10.3	11.7	13.5	8.1	8.6	9.0	9.7	10.4	11.8	13.7
Span (ft.) ↓															
23	825 550	825 550	825 550	825 550	825 550	825 550	825 550	825 550							
24	780 516	825 544	825 544	825 544	825 544	825 544	825 544	825 544							
25	718 456	810 511	825 520	825 520	825 520	825 520	825 520	825 520	825 550	825 550	825 550	825 550	825 550	825 550	825 550
26	663 405	748 453	814 493	825 499	825 499	825 499	825 499	825 499	813 535	825 541	825 541	825 541	825 541	825 541	825 541
27	615 361	693 404	754 439	825 479	825 479	825 479	825 479	825 479	753 477	820 519	825 522	825 522	825 522	825 522	825 522
28	571 323	643 362	700 393	781 436	825 456	825 456	825 456	825 456	699 427	762 464	825 501	825 501	825 501	825 501	825 501
29	531 290	600 325	652 354	727 392	804 429	825 436	825 436	825 436	651 384	709 417	790 463	825 479	825 479	825 479	825 479
30	496 262	559 293	609 319	679 353	750 387	816 419	825 422	825 422	607 346	661 377	738 417	816 457	825 459	825 459	825 459
31	465 237	523 266	570 289	636 320	702 350	765 379	825 410	825 410	568 314	619 341	690 378	763 413	825 444	825 444	825 444
32	435 215	490 241	535 262	595 290	658 318	717 344	823 393	823 393	534 285	580 309	648 343	715 375	778 407	823 431	823 431
33	409 196	462 220	502 239	559 265	619 289	673 313	798 368	798 368	501 259	546 282	609 312	672 342	732 370	798 404	798 404
34	385 179	435 201	472 218	526 242	582 264	634 286	753 337	774 344	472 237	514 257	573 285	633 312	688 338	774 378	774 378
35	363 164	409 184	445 200	496 221	549 242	598 262	709 308	751 324	445 217	484 236	540 261	597 286	649 310	751 356	751 356
36	343 150	387 169	421 183	469 203	519 222	565 241	670 283	730 306	420 199	457 216	510 240	564 263	613 284	729 334	730 334
37	324 138	366 155	399 169	444 187	490 205	534 222	634 260	711 290	397 183	433 199	483 221	534 242	580 262	690 308	711 315
38	307 128	346 143	378 156	421 172	465 189	507 204	601 240	691 275	376 169	411 184	457 204	505 223	550 241	654 284	691 299
39	292 118	328 132	358 144	399 159	441 174	480 189	570 222	673 261	357 156	390 170	433 188	480 206	522 223	619 262	673 283
40	277 109	312 122	340 133	379 148	420 161	456 175	541 206	657 247	340 145	370 157	412 174	456 191	496 207	589 243	657 269
41	264 101	297 114	324 124	361 137	399 150	435 162	516 191	640 235	322 134	352 146	393 162	433 177	472 192	561 225	640 256
42	252 94	283 106	309 115	343 127	379 139	414 151	490 177	625 224	307 125	336 136	373 150	412 164	450 178	534 210	625 244
43	240 88	270 98	294 107	328 118	363 130	394 140	468 165	609 213	294 116	319 126	357 140	394 153	429 166	508 195	610 232
44	229 82	258 92	280 100	313 110	346 121	376 131	447 154	580 199	280 108	306 118	340 131	376 143	409 155	486 182	597 222
45	219 76	246 86	268 93	298 103	330 113	360 122	427 144	555 185	268 101	291 110	325 122	360 133	391 145	465 170	583 212
46	208 71	235 80	256 87	286 97	316 106	345 114	408 135	531 174	256 95	279 103	310 114	343 125	375 135	444 159	570 203
47	199 67	225 75	246 82	274 90	303 99	330 107	391 126	508 163	246 89	267 96	298 107	328 117	358 127	426 149	553 192
48	192 63	216 70	235 77	262 85	291 93	316 101	375 118	487 153	235 83	256 90	285 100	315 110	343 119	408 140	529 180
49									225 78	246 85	274 94	303 103	330 112	391 131	508 169
50									216 73	235 80	262 89	291 97	316 105	375 124	487 159
51									208 69	226 75	252 83	279 91	304 99	361 116	469 150
52									199 65	217 71	243 79	268 86	292 93	346 110	451 142

LRFD

STANDARD LOAD TABLE/OPEN WEB STEEL JOISTS, K-SERIES
Based On A 50 ksi Maximum Yield Strength - Loads Shown In Pounds Per Linear Foot (plf)

Joist Designation	28K6	28K7	28K8	28K9	28K10	28K12	30K7	30K8	30K9	30K10	30K11	30K12
Depth (In.)	28	28	28	28	28	28	30	30	30	30	30	30
Approx. Wt. (lbs./ft.)	8.9	9.2	9.8	10.5	11.8	14.5	9.6	10.0	10.6	11.9	13.3	15.0
Span (ft.) ↓												
27	825 550	825 550	825 550	825 550	825 550	825 550						
28	822 541	825 543	825 543	825 543	825 543	825 543						
29	766 486	825 522	825 522	825 522	825 522	825 522	825 550	825 550	825 550	825 550	825 550	825 550
30	715 439	796 486	825 500	825 500	825 500	825 500	825 543	825 543	825 543	825 543	825 543	825 543
31	669 397	745 440	825 480	825 480	825 480	825 480	801 508	825 520	825 520	825 520	825 520	825 520
32	627 361	699 400	772 438	823 463	823 463	823 463	751 461	823 500	823 500	823 500	823 500	823 500
33	589 329	657 364	726 399	790 432	798 435	798 435	706 420	780 460	798 468	798 468	798 468	798 468
34	555 300	618 333	684 364	744 395	774 410	774 410	664 384	735 420	774 441	774 441	774 441	774 441
35	523 275	583 305	645 333	702 361	751 389	751 389	627 351	693 384	751 415	751 415	751 415	751 415
36	495 252	550 280	609 306	663 332	730 366	730 366	592 323	654 353	712 383	730 392	730 392	730 392
37	468 232	522 257	576 282	627 305	711 344	711 344	559 297	619 325	673 352	711 374	711 374	711 374
38	444 214	493 237	546 260	594 282	691 325	691 325	531 274	586 300	639 325	691 353	691 353	691 353
39	420 198	469 219	519 240	564 260	670 306	673 308	504 253	556 277	606 300	673 333	673 333	673 333
40	399 183	445 203	492 222	535 241	636 284	657 291	478 234	529 256	576 278	657 315	657 315	657 315
41	379 170	424 189	468 206	510 224	606 263	640 277	454 217	502 238	547 258	640 300	640 300	640 300
42	361 158	403 175	445 192	486 208	576 245	625 264	433 202	480 221	522 240	619 282	625 284	625 284
43	345 147	385 163	426 179	463 194	550 228	610 252	414 188	457 206	498 223	591 263	610 270	610 270
44	330 137	367 152	406 167	442 181	525 212	597 240	394 176	436 192	475 208	564 245	597 258	597 258
45	315 128	351 142	388 156	423 169	501 198	583 229	376 164	417 179	454 195	538 229	583 246	583 246
46	301 120	336 133	372 146	405 158	480 186	570 219	361 153	399 168	435 182	516 214	570 236	570 236
47	288 112	321 125	355 136	387 148	459 174	558 210	345 144	382 157	415 171	493 201	558 226	558 226
48	276 105	309 117	340 128	370 139	441 163	547 201	331 135	366 148	399 160	472 188	543 215	547 216
49	265 99	295 110	327 120	355 130	423 153	535 193	318 127	351 139	382 150	454 177	520 202	535 207
50	255 93	283 103	313 113	342 123	405 144	525 185	304 119	337 130	367 141	436 166	499 190	525 199
51	244 88	273 97	301 106	328 115	390 136	507 175	292 112	324 123	352 133	418 157	480 179	514 192
52	235 83	262 92	289 100	315 109	375 128	487 165	282 106	312 116	339 126	402 148	462 169	504 184
53	226 78	252 87	279 95	304 103	360 121	469 156	271 100	300 109	327 119	387 140	444 159	495 177
54	217 74	243 82	268 89	292 97	348 114	451 147	261 94	288 103	313 112	373 132	427 150	486 170
55	210 70	234 77	259 85	282 92	334 108	435 139	252 89	277 98	303 106	360 125	412 142	468 161
56	202 66	226 73	249 80	271 87	322 102	420 132	243 84	268 92	292 100	346 118	397 135	451 153
57							234 80	259 88	282 95	334 112	384 128	435 145
58							226 76	250 83	271 90	322 106	370 121	420 137
59							219 72	241 79	262 86	312 101	358 115	406 130
60							211 69	234 75	253 81	301 96	346 109	393 124

LRFD

METRIC LOAD TABLE FOR OPEN WEB STEEL JOISTS, K-SERIES
Based On A 345 MPa Maximum Yield Strength - Loads Shown In Kilonewtons Per Meter (kN/m)

Joist Designation	10K1	12K1	12K3	12K5	14K1	14K3	14K4	14K6	16K2	16K3	16K4	16K5	16K6	16K7	16K9
Depth (mm)	254	305	305	305	356	356	356	356	406	406	406	406	406	406	406
Approx. Wt (kN/m)	0.07	0.07	0.08	0.10	0.08	0.09	0.10	0.11	0.08	0.09	0.10	0.11	0.12	0.13	0.15
Span (mm) ↓															
3048	12.03 8.02														
3353	12.03 7.90														
3658	12.03 6.64	12.03 8.02	12.03 8.02	12.03 8.02											
3962	10.48 5.29	12.03 7.44	12.03 7.44	12.03 7.44											
4267	9.01 4.21	10.94 6.20	12.03 6.75	12.03 6.75	12.03 8.02	12.03 8.02	12.03 8.02	12.03 8.02							
4572	7.83 3.41	9.50 5.02	11.88 6.24	12.03 6.33	11.18 6.93	12.03 7.39	12.03 7.39	12.03 7.39							
4877	6.85 2.80	8.31 4.11	10.42 5.12	12.03 5.77	9.80 5.69	12.03 6.81	12.03 6.81	12.03 6.81	12.03 8.02	12.03 8.02	12.03 8.02	12.03 8.02	12.03 8.02	12.03 8.02	12.03 8.02
5182	6.06 2.32	7.35 3.41	9.19 4.24	12.03 5.34	8.64 4.72	10.83 5.89	12.03 6.46	12.03 6.46	11.20 7.12	12.03 7.67	12.03 7.67	12.03 7.67	12.03 7.67	12.03 7.67	12.03 7.67
5486	5.38 1.95	6.54 2.87	8.18 3.57	11.09 4.62	7.70 3.96	9.65 4.94	11.60 5.79	12.03 5.95	9.98 5.96	11.12 6.65	12.03 7.15	12.03 7.15	12.03 7.15	12.03 7.15	12.03 7.15
5791	4.83 1.64	5.86 2.43	7.33 3.02	9.93 3.92	6.89 3.35	8.64 4.18	10.39 4.90	12.03 5.58	8.93 5.06	9.96 5.63	11.97 6.59	12.03 6.64	12.03 6.64	12.03 6.64	12.03 6.64
6096	4.35 1.41	5.27 2.07	6.61 2.58	8.95 3.35	6.21 2.87	7.79 3.59	9.36 4.18	11.49 5.06	8.05 4.33	8.97 4.81	10.79 5.63	12.03 6.21	12.03 6.21	12.03 6.21	12.03 6.21
6401		4.77 1.79	5.97 2.23	8.09 2.88	5.62 2.48	7.04 3.09	8.49 3.61	10.39 4.36	7.28 3.72	8.12 4.15	9.78 4.85	11.01 5.44	11.99 5.91	12.03 5.92	12.03 5.92
6706		4.35 1.54	5.45 1.92	7.37 2.51	5.12 2.14	6.41 2.68	7.72 3.13	9.45 3.77	6.63 3.23	7.37 3.60	8.88 4.21	10.02 4.71	10.90 5.12	12.03 5.61	12.03 5.61
7010		3.96 1.35	4.96 1.69	6.74 2.18	4.68 1.86	5.86 2.33	7.04 2.74	8.64 3.29	6.06 2.83	6.74 3.15	8.12 3.67	9.15 4.11	9.96 4.48	11.09 4.94	12.03 5.29
7315		3.63 1.18	4.55 1.47	6.17 1.92	4.29 1.64	5.36 2.05	6.45 2.40	7.92 2.90	5.56 2.48	6.19 2.75	7.44 3.22	8.40 3.61	9.15 3.92	10.17 4.34	12.03 5.04
7620					3.94 1.45	4.94 1.80	5.95 2.11	7.31 2.55	5.12 2.18	5.69 2.43	6.85 2.84	7.72 3.19	8.40 3.47	9.36 3.83	11.25 4.53
7925					3.63 1.28	4.57 1.60	5.49 1.88	6.74 2.27	4.72 1.94	5.25 2.15	6.32 2.52	7.13 2.83	7.77 3.07	8.64 3.40	10.37 4.02
8230					3.37 1.15	4.22 1.43	5.10 1.67	6.23 2.02	4.37 1.73	4.88 1.92	5.86 2.26	6.61 2.52	7.20 2.74	8.01 3.03	9.61 3.59
8534					3.13 1.02	3.94 1.28	4.72 1.50	5.80 1.80	4.07 1.54	4.53 1.72	5.45 2.01	6.15 2.26	6.69 2.45	7.44 2.71	8.93 3.21
8839									3.78 1.38	4.22 1.54	5.07 1.80	5.71 2.02	6.23 2.20	6.93 2.43	8.31 2.88
9144									3.52 1.25	3.94 1.40	4.72 1.63	5.34 1.83	5.82 1.99	6.47 2.20	7.77 2.59
9449									3.30 1.13	3.67 1.26	4.44 1.47	4.99 1.66	5.45 1.80	6.06 1.99	7.26 2.34
9754									3.10 1.03	3.45 1.15	4.15 1.34	4.68 1.50	5.10 1.63	5.66 1.80	6.80 2.14

LRFD

METRIC LOAD TABLE FOR OPEN WEB STEEL JOISTS, K-SERIES
Based On A 345 MPa Maximum Yield Strength - Loads Shown In Kilonewtons Per Meter (kN/m)

Joist Designation	18K3	18K4	18K5	18K6	18K7	18K9	18K10	20K3	20K4	20K5	20K6	20K7	20K9	20K10	22K4	22K5	22K6	22K7	22K9	22K10	22K11
Depth (mm)	457	457	457	457	457	457	457	508	508	508	508	508	508	508	559	559	559	559	559	559	559
Approx. Wt. (kN/m)	0.09	0.11	0.11	0.12	0.13	0.15	0.17	0.09	0.11	0.11	0.12	0.13	0.15	0.17	0.11	0.11	0.12	0.13	0.15	0.17	0.17
Span (mm) ↓																					
5486	12.03	12.03	12.03	12.03	12.03	12.03	12.03														
	8.02	8.02	8.02	8.02	8.02	8.02	8.02														
5791	11.25	12.03	12.03	12.03	12.03	12.03	12.03	12.03	12.03	12.03	12.03	12.03	12.03	12.03							
	7.20	7.63	7.63	7.63	7.63	7.63	7.63	8.02	8.02	8.02	8.02	8.02	8.02	8.02							
6096	10.13	12.03	12.03	12.03	12.03	12.03	12.03	11.31	12.03	12.03	12.03	12.03	12.03	12.03							
	6.17	7.15	7.15	7.15	7.15	7.15	7.15	7.54	8.02	8.02	8.02	8.02	8.02	8.02							
6401	9.19	11.07	12.03	12.03	12.03	12.03	12.03	10.24	12.03	12.03	12.03	12.03	12.03	12.03	12.03	12.03	12.03	12.03	12.03	12.03	12.03
	5.31	6.21	6.71	6.71	6.71	6.71	6.71	6.61	7.58	7.58	7.58	7.58	7.58	7.58	8.02	8.02	8.02	8.02	8.02	8.02	8.02
6706	8.36	10.06	11.33	12.03	12.03	12.03	12.03	9.32	11.25	12.03	12.03	12.03	12.03	12.03	12.03	12.03	12.03	12.03	12.03	12.03	12.03
	4.61	5.39	6.04	6.39	6.39	6.39	6.39	5.73	6.72	7.15	7.15	7.15	7.15	7.15	7.99	7.99	7.99	7.99	7.99	7.99	7.99
7010	7.63	9.19	10.35	11.29	12.03	12.03	12.03	8.51	10.26	11.58	12.03	12.03	12.03	12.03	11.33	12.03	12.03	12.03	12.03	12.03	12.03
	4.02	4.71	5.28	5.73	6.10	6.10	6.10	5.02	5.86	6.58	6.82	6.82	6.82	6.82	7.16	7.55	7.55	7.55	7.55	7.55	7.55
7315	7.00	8.42	9.50	10.35	11.51	12.03	12.03	7.81	9.41	10.61	11.55	12.03	12.03	12.03	10.39	11.73	12.03	12.03	12.03	12.03	12.03
	3.53	4.14	4.64	5.03	5.57	5.77	5.77	4.40	5.15	5.77	6.27	6.53	6.53	6.53	6.28	7.04	7.22	7.22	7.22	7.22	7.22
7620	6.43	7.77	8.75	9.52	10.61	12.03	12.03	7.20	8.66	9.76	10.63	11.84	12.03	12.03	9.58	10.79	11.75	12.03	12.03	12.03	12.03
	3.12	3.64	4.10	4.45	4.91	5.50	5.50	3.88	4.55	5.10	5.54	6.14	6.21	6.21	5.56	6.23	6.77	6.91	6.91	6.91	6.91
7925	5.95	7.18	8.07	8.80	9.80	11.77	12.03	6.65	8.01	9.01	9.82	10.94	12.03	12.03	8.84	9.96	10.85	12.03	12.03	12.03	12.03
	2.77	3.23	3.63	3.95	4.36	5.16	5.26	3.44	4.04	4.52	4.91	5.44	5.91	5.91	4.93	5.53	5.99	6.62	6.62	6.62	6.62
8230	5.51	6.63	7.48	8.14	9.08	10.90	12.03	6.15	7.42	8.36	9.10	10.13	12.03	12.03	8.18	9.23	10.04	11.20	12.03	12.03	12.03
	2.46	2.88	3.23	3.51	3.89	4.59	5.06	3.07	3.60	4.04	4.39	4.85	5.67	5.67	4.39	4.91	5.35	5.92	6.30	6.30	6.30
8534	5.12	6.17	6.96	7.57	8.42	10.13	11.99	5.71	6.89	7.77	8.44	9.41	11.31	12.03	7.61	8.58	9.34	10.39	12.03	12.03	12.03
	2.20	2.58	2.90	3.15	3.48	4.11	4.83	2.75	3.22	3.61	3.92	4.34	5.15	5.47	3.94	4.40	4.78	5.31	6.02	6.02	6.02
8839	4.77	5.75	6.47	7.04	7.85	9.43	11.18	5.31	6.41	7.22	7.88	8.77	10.55	12.03	7.09	7.99	8.71	9.69	11.64	12.03	12.03
	1.98	2.32	2.61	2.83	3.13	3.70	4.34	2.48	2.90	3.25	3.53	3.91	4.62	5.23	3.53	3.96	4.30	4.77	5.64	5.82	5.82
9144	4.44	5.36	6.04	6.58	7.33	8.80	10.44	4.96	5.99	6.74	7.35	8.18	9.85	11.66	6.61	7.46	8.12	9.04	10.87	12.03	12.03
	1.79	2.10	2.34	2.55	2.83	3.34	3.92	2.23	2.61	2.93	3.18	3.53	4.17	4.90	3.19	3.57	3.88	4.30	5.09	5.61	5.61
9449	4.15	5.01	5.64	6.15	6.85	8.23	9.76	4.64	5.60	6.32	6.87	7.66	9.21	10.92	6.19	6.98	7.59	8.47	10.17	12.03	12.03
	1.61	1.89	2.13	2.30	2.55	3.02	3.54	2.01	2.36	2.65	2.88	3.19	3.77	4.43	2.88	3.23	3.51	3.89	4.61	5.38	5.38
9754	3.89	4.70	5.29	5.77	6.43	7.72	9.15	4.35	5.25	5.93	6.45	7.18	8.64	10.24	5.80	6.54	7.13	7.94	9.54	11.31	12.01
	1.47	1.72	1.92	2.10	2.32	2.74	3.22	1.83	2.14	2.40	2.61	2.90	3.42	4.02	2.62	2.93	3.19	3.53	4.18	4.91	5.18
10058	3.67	4.42	4.99	5.42	6.04	7.26	8.60	4.09	4.94	5.56	6.06	6.76	8.12	9.63	5.45	6.15	6.69	7.46	8.97	10.63	11.64
	1.34	1.57	1.76	1.91	2.11	2.49	2.93	1.66	1.95	2.18	2.37	2.64	3.12	3.66	2.39	2.67	2.90	3.22	3.80	4.48	4.87
10363	3.45	4.15	4.68	5.10	5.69	6.82	8.09	3.85	4.64	5.23	5.71	6.34	7.63	9.06	5.14	5.80	6.30	7.02	8.44	10.02	11.29
	1.22	1.43	1.60	1.75	1.92	2.27	2.68	1.53	1.78	1.99	2.17	2.40	2.84	3.34	2.17	2.43	2.65	2.94	3.48	4.08	4.58
10668	3.26	3.91	4.42	4.81	5.36	6.43	7.63	3.63	4.37	4.94	5.38	5.99	7.20	8.53	4.83	5.45	5.95	6.63	7.96	9.45	10.81
	1.12	1.31	1.47	1.60	1.76	2.08	2.45	1.40	1.63	1.83	1.99	2.20	2.61	3.06	1.99	2.23	2.43	2.69	3.19	3.75	4.26
10973	3.08	3.69	4.18	4.55	5.07	6.08	7.22	3.43	4.13	4.66	5.07	5.66	6.80	8.07	4.57	5.16	5.62	6.26	7.53	8.93	10.22
	1.02	1.19	1.34	1.47	1.61	1.92	2.24	1.28	1.50	1.67	1.82	2.02	2.39	2.81	1.83	2.05	2.23	2.46	2.93	3.44	3.92
11278								3.23	3.91	4.42	4.81	5.36	6.43	7.63	4.33	4.88	5.31	5.93	7.11	8.44	9.67
								1.18	1.38	1.54	1.67	1.86	2.20	2.59	1.69	1.89	2.05	2.27	2.69	3.16	3.60
11582								3.08	3.72	4.18	4.55	5.07	6.10	7.24	4.09	4.61	5.03	5.60	6.74	8.01	9.17
								1.07	1.26	1.43	1.54	1.72	2.02	2.39	1.56	1.73	1.89	2.10	2.48	2.91	3.32
11887								2.91	3.52	3.96	4.33	4.81	5.80	6.87	3.89	4.37	4.77	5.31	6.39	7.59	8.69
								1.00	1.18	1.31	1.43	1.59	1.88	2.20	1.43	1.60	1.75	1.94	2.29	2.69	3.07
12192								2.78	3.34	3.76	4.11	4.57	5.49	6.52	3.69	4.15	4.53	5.05	6.08	7.22	8.25
								0.93	1.09	1.22	1.32	1.47	1.73	2.04	1.32	1.48	1.61	1.79	2.13	2.49	2.84
12497															3.52	3.96	4.31	4.81	5.77	6.87	7.85
															1.24	1.38	1.50	1.66	1.97	2.32	2.64
12802															3.34	3.78	4.11	4.57	5.51	6.54	7.48
															1.15	1.28	1.40	1.54	1.83	2.15	2.45
13106															3.19	3.61	3.91	4.37	5.25	6.23	7.13
															1.06	1.19	1.29	1.44	1.70	2.01	2.29
13411															3.04	3.43	3.74	4.18	5.01	5.95	6.80
															0.99	1.10	1.21	1.34	1.59	1.86	2.13

LRFD

METRIC LOAD TABLE FOR OPEN WEB STEEL JOISTS, K-SERIES
Based On A 345 MPa Maximum Yield Strength - Loads Shown In Kilonewtons Per Meter (kN/m)

Joist Designation	24K4	24K5	24K6	24K7	24K8	24K9	24K10	24K12	26K5	26K6	26K7	26K8	26K9	26K10	26K12
Depth (mm)	610	610	610	610	610	610	610	610	660	660	660	660	660	660	660
Approx. Wt. (kN/m)	0.11	0.12	0.12	0.13	0.14	0.15	0.17	0.20	0.12	0.13	0.13	0.14	0.15	0.17	0.20
Span (mm) ↓															
7010	12.03 8.02	12.03 8.02	12.03 8.02	12.03 8.02	12.03 8.02	12.03 8.02	12.03 8.02	12.03 8.02							
7315	11.38 7.53	12.03 7.93	12.03 7.93	12.03 7.93	12.03 7.93	12.03 7.93	12.03 7.93	12.03 7.93							
7620	10.48 6.65	11.82 7.45	12.03 7.58	12.03 7.58	12.03 7.58	12.03 7.58	12.03 7.58	12.03 7.58	12.03 8.02	12.03 8.02	12.03 8.02	12.03 8.02	12.03 8.02	12.03 8.02	12.03 8.02
7925	9.67 5.91	10.92 6.61	11.88 7.19	12.03 7.28	12.03 7.28	12.03 7.28	12.03 7.28	12.03 7.28	11.86 7.80	12.03 7.89	12.03 7.89	12.03 7.89	12.03 7.89	12.03 7.89	12.03 7.89
8230	8.97 5.26	10.11 5.89	11.01 6.40	12.03 6.99	12.03 6.99	12.03 6.99	12.03 6.99	12.03 6.99	10.98 6.96	11.97 7.57	12.03 7.61	12.03 7.61	12.03 7.61	12.03 7.61	12.03 7.61
8534	8.34 4.71	9.39 5.28	10.22 5.73	11.40 6.36	12.03 6.65	12.03 6.65	12.03 6.65	12.03 6.65	10.20 6.23	11.12 6.77	12.03 7.31	12.03 7.31	12.03 7.31	12.03 7.31	12.03 7.31
8839	7.74 4.23	8.75 4.74	9.52 5.16	10.61 5.72	11.73 6.26	12.03 6.36	12.03 6.36	12.03 6.36	9.50 5.60	10.35 6.08	11.53 6.75	12.03 6.99	12.03 6.99	12.03 6.99	12.03 6.99
9144	7.24 3.82	8.16 4.27	8.88 4.65	9.91 5.15	10.94 5.64	11.90 6.11	12.03 6.15	12.03 6.15	8.86 5.04	9.65 5.50	10.77 6.08	11.90 6.66	12.03 6.69	12.03 6.69	12.03 6.69
9449	6.78 3.45	7.63 3.88	8.31 4.21	9.28 4.67	10.24 5.10	11.16 5.53	12.03 5.98	12.03 5.98	8.29 4.58	9.04 4.97	10.06 5.51	11.14 6.02	12.03 6.47	12.03 6.47	12.03 6.47
9754	6.34 3.13	7.15 3.51	7.81 3.82	8.69 4.23	9.61 4.64	10.46 5.02	12.01 5.73	12.01 5.73	7.79 4.15	8.47 4.50	9.45 5.00	10.44 5.47	11.36 5.93	12.01 6.28	12.01 6.28
10058	5.97 2.86	6.74 3.21	7.33 3.48	8.16 3.86	9.04 4.21	9.82 4.56	11.64 5.37	11.64 5.37	7.31 3.77	7.96 4.11	8.88 4.55	9.80 4.99	10.68 5.39	11.64 5.89	11.64 5.89
10363	5.62 2.61	6.34 2.93	6.89 3.18	7.68 3.53	8.49 3.85	9.25 4.17	10.98 4.91	11.29 5.02	6.89 3.45	7.50 3.75	8.36 4.15	9.23 4.55	10.04 4.93	11.29 5.51	11.29 5.51
10668	5.29 2.39	5.97 2.68	6.50 2.91	7.24 3.22	8.01 3.53	8.73 3.82	10.35 4.49	10.96 4.72	6.50 3.16	7.07 3.44	7.88 3.80	8.71 4.17	9.47 4.52	10.96 5.19	10.96 5.19
10973	5.01 2.18	5.64 2.46	6.15 2.67	6.85 2.96	7.57 3.23	8.25 3.51	9.78 4.13	10.66 4.46	6.12 2.90	6.67 3.15	7.44 3.50	8.23 3.83	8.95 4.14	10.63 4.87	10.66 4.87
11278	4.72 2.01	5.34 2.26	5.82 2.46	6.47 2.72	7.15 2.99	7.79 3.23	9.25 3.79	10.37 4.23	5.80 2.67	6.32 2.90	7.04 3.22	7.79 3.53	8.47 3.82	10.06 4.49	10.37 4.59
11582	4.48 1.86	5.05 2.08	5.51 2.27	6.15 2.51	6.78 2.75	7.39 2.97	8.77 3.50	10.09 4.01	5.49 2.46	5.99 2.68	6.67 2.97	7.37 3.25	8.03 3.51	9.54 4.14	10.09 4.36
11887	4.26 1.72	4.79 1.92	5.23 2.10	5.82 2.32	6.43 2.53	7.00 2.75	8.31 3.23	9.82 3.80	5.21 2.27	5.69 2.48	6.32 2.74	7.00 3.00	7.61 3.25	9.04 3.82	9.82 4.13
12192	4.04 1.59	4.55 1.78	4.96 1.94	5.53 2.15	6.12 2.34	6.65 2.55	7.90 3.00	9.58 3.60	4.96 2.11	5.40 2.29	6.01 2.53	6.65 2.78	7.24 3.02	8.60 3.54	9.58 3.92
12497	3.85 1.47	4.33 1.66	4.72 1.80	5.27 1.99	5.82 2.18	6.34 2.36	7.53 2.78	9.34 3.42	4.70 1.95	5.14 2.13	5.73 2.36	6.32 2.58	6.89 2.80	8.18 3.28	9.34 3.73
12802	3.67 1.37	4.13 1.54	4.50 1.67	5.01 1.85	5.53 2.02	6.04 2.20	7.15 2.58	9.12 3.26	4.48 1.82	4.90 1.98	5.45 2.18	6.01 2.39	6.56 2.59	7.79 3.06	9.12 3.56
13106	3.50 1.28	3.94 1.43	4.29 1.56	4.79 1.72	5.29 1.89	5.75 2.04	6.82 2.40	8.88 3.10	4.29 1.69	4.66 1.83	5.21 2.04	5.75 2.23	6.26 2.42	7.42 2.84	8.90 3.38
13411	3.34 1.19	3.76 1.34	4.09 1.45	4.57 1.60	5.05 1.76	5.49 1.91	6.52 2.24	8.47 2.90	4.09 1.57	4.46 1.72	4.96 1.91	5.49 2.08	5.97 2.26	7.09 2.65	8.71 3.23
13716	3.19 1.10	3.59 1.25	3.91 1.35	4.35 1.50	4.81 1.64	5.25 1.78	6.23 2.10	8.09 2.69	3.91 1.47	4.24 1.60	4.75 1.78	5.25 1.94	5.71 2.11	6.78 2.48	8.51 3.09
14021	3.04 1.03	3.43 1.16	3.74 1.26	4.18 1.41	4.61 1.54	5.03 1.66	5.95 1.97	7.74 2.53	3.74 1.38	4.07 1.50	4.53 1.66	5.01 1.82	5.47 1.97	6.47 2.32	8.31 2.96
14326	2.91 0.97	3.28 1.09	3.59 1.19	4.00 1.31	4.42 1.44	4.81 1.56	5.71 1.83	7.42 2.37	3.59 1.29	3.89 1.40	4.35 1.56	4.79 1.70	5.23 1.85	6.21 2.17	8.07 2.80
14630	2.80 0.91	3.15 1.02	3.43 1.12	3.83 1.24	4.24 1.35	4.61 1.47	5.47 1.72	7.11 2.23	3.43 1.21	3.74 1.31	4.15 1.45	4.59 1.60	5.01 1.73	5.95 2.04	7.72 2.62
14935									3.28 1.13	3.59 1.24	4.00 1.37	4.42 1.50	4.81 1.63	5.71 1.91	7.42 2.46
15240									3.15 1.06	3.43 1.16	3.83 1.29	4.24 1.41	4.61 1.53	5.47 1.80	7.11 2.32
15545									3.04 1.00	3.30 1.09	3.67 1.21	4.07 1.32	4.44 1.44	5.27 1.69	6.85 2.18
15850									2.91 0.94	3.17 1.03	3.54 1.15	3.91 1.25	4.26 1.35	5.05 1.60	6.58 2.07

LRFD

METRIC LOAD TABLE FOR OPEN WEB STEEL JOISTS, K-SERIES
Based On A 345 MPa Maximum Yield Strength - Loads Shown In Kilonewtons Per Meter (kN/m)

Joist Designation	28K6	28K7	28K8	28K9	28K10	28K12	30K7	30K8	30K9	30K10	30K11	30K12
Depth (mm)	711	711	711	711	711	711	762	762	762	762	762	762
Approx. Wt. (kN/m)	0.13	0.13	0.14	0.15	0.17	0.21	0.14	0.15	0.15	0.17	0.19	0.22
Span (mm) ↓												
8230	12.03 8.02	12.03 8.02	12.03 8.02	12.03 8.02	12.03 8.02	12.03 8.02						
8534	11.99 7.89	12.03 7.92	12.03 7.92	12.03 7.92	12.03 7.92	12.03 7.92						
8839	11.18 7.09	12.03 7.61	12.03 7.61	12.03 7.61	12.03 7.61	12.03 7.61	12.03 8.02	12.03 8.02	12.03 8.02	12.03 8.02	12.03 8.02	12.03 8.02
9144	10.44 6.40	11.62 7.09	12.03 7.29	12.03 7.29	12.03 7.29	12.03 7.29	12.03 7.92	12.03 7.92	12.03 7.92	12.03 7.92	12.03 7.92	12.03 7.92
9449	9.76 5.79	10.87 6.42	12.03 7.00	12.03 7.00	12.03 7.00	12.03 7.00	11.68 7.41	12.03 7.58	12.03 7.58	12.03 7.58	12.03 7.58	12.03 7.58
9754	9.15 5.26	10.20 5.83	11.27 6.39	12.01 6.75	12.01 6.75	12.01 6.75	10.96 6.72	12.01 7.29	12.01 7.29	12.01 7.29	12.01 7.29	12.01 7.29
10058	8.60 4.80	9.58 5.31	10.59 5.82	11.53 6.30	11.64 6.34	11.64 6.34	10.31 6.12	11.38 6.71	11.64 6.82	11.64 6.82	11.64 6.82	11.64 6.82
10363	8.09 4.37	9.01 4.85	9.98 5.31	10.85 5.76	11.29 5.98	11.29 5.98	9.69 5.60	10.72 6.12	11.29 6.43	11.29 6.43	11.29 6.43	11.29 6.43
10668	7.63 4.01	8.51 4.45	9.41 4.85	10.24 5.26	10.96 5.67	10.96 5.67	9.15 5.12	10.11 5.60	10.96 6.05	10.96 6.05	10.96 6.05	10.96 6.05
10973	7.22 3.67	8.03 4.08	8.88 4.46	9.67 4.84	10.66 5.34	10.66 5.34	8.64 4.71	9.54 5.15	10.39 5.58	10.66 5.72	10.66 5.72	10.66 5.72
11278	6.82 3.38	7.61 3.75	8.40 4.11	9.15 4.45	10.37 5.02	10.37 5.02	8.16 4.33	9.04 4.74	9.82 5.13	10.37 5.45	10.37 5.45	10.37 5.45
11582	6.47 3.12	7.20 3.45	7.96 3.79	8.66 4.11	10.09 4.74	10.09 4.74	7.74 3.99	8.55 4.37	9.32 4.74	10.09 5.15	10.09 5.15	10.09 5.15
11887	6.12 2.88	6.85 3.19	7.57 3.50	8.23 3.79	9.78 4.46	9.82 4.49	7.35 3.69	8.12 4.04	8.84 4.37	9.82 4.85	9.82 4.85	9.82 4.85
12192	0.09 2.67	6.50 2.96	7.18 3.23	7.81 3.51	9.28 4.14	9.58 4.24	6.98 3.41	7.72 3.73	8.40 4.05	9.58 4.59	9.58 4.59	9.58 4.59
12497	5.53 2.48	6.19 2.75	6.82 3.00	7.44 3.26	8.84 3.83	9.34 4.04	6.63 3.16	7.33 3.47	7.99 3.76	9.34 4.37	9.34 4.37	9.34 4.37
12802	5.27 2.30	5.88 2.55	6.50 2.80	7.09 3.03	8.40 3.57	9.12 3.85	6.32 2.94	7.00 3.22	7.61 3.50	9.04 4.11	9.12 4.14	9.12 4.14
13106	5.03 2.14	5.62 2.37	6.21 2.61	6.76 2.83	8.03 3.32	8.90 3.67	6.04 2.74	6.67 3.00	7.26 3.25	8.62 3.83	8.90 3.94	8.90 3.94
13411	4.81 1.99	5.36 2.21	5.93 2.43	6.45 2.64	7.66 3.09	8.71 3.50	5.75 2.56	6.37 2.80	6.93 3.03	8.23 3.57	8.71 3.76	8.71 3.76
13716	4.59 1.86	5.12 2.07	5.66 2.27	6.17 2.46	7.31 2.88	8.51 3.34	5.49 2.39	6.08 2.61	6.63 2.84	7.85 3.34	8.51 3.59	8.51 3.59
14021	4.40 1.75	4.90 1.94	5.42 2.13	5.91 2.30	7.00 2.71	8.31 3.19	5.27 2.23	5.82 2.45	6.34 2.65	7.53 3.12	8.31 3.44	8.31 3.44
14326	4.20 1.63	4.68 1.82	5.18 1.98	5.64 2.15	6.69 2.53	8.14 3.06	5.03 2.10	5.58 2.29	6.06 2.49	7.20 2.93	8.14 3.29	8.14 3.29
14630	4.02 1.53	4.50 1.70	4.96 1.86	5.40 2.02	6.43 2.37	7.99 2.93	4.83 1.97	5.34 2.15	5.82 2.33	6.89 2.74	7.92 3.13	7.99 3.15
14935	3.87 1.44	4.31 1.60	4.77 1.75	5.18 1.89	6.17 2.23	7.81 2.81	4.64 1.85	5.12 2.02	5.58 2.18	6.63 2.58	7.59 2.94	7.81 3.02
15240	3.72 1.35	4.13 1.50	4.57 1.64	4.99 1.79	5.91 2.10	7.66 2.69	4.44 1.73	4.92 1.89	5.36 2.05	6.37 2.42	7.28 2.77	7.66 2.90
15545	3.56 1.28	3.98 1.41	4.40 1.54	4.79 1.67	5.69 1.98	7.39 2.55	4.26 1.63	4.72 1.79	5.14 1.94	6.10 2.29	7.00 2.61	7.50 2.80
15850	3.43 1.21	3.83 1.34	4.22 1.45	4.59 1.59	5.47 1.86	7.11 2.40	4.11 1.54	4.55 1.69	4.94 1.83	5.86 2.15	6.74 2.46	7.35 2.68
16154	3.30 1.13	3.67 1.26	4.07 1.38	4.44 1.50	5.25 1.76	6.85 2.27	3.96 1.45	4.37 1.59	4.77 1.73	5.64 2.04	6.47 2.32	7.22 2.58
16459	3.17 1.07	3.54 1.19	3.91 1.29	4.26 1.41	5.07 1.66	6.58 2.14	3.80 1.37	4.20 1.50	4.57 1.63	5.45 1.92	6.23 2.18	7.09 2.48
16764	3.06 1.02	3.41 1.12	3.78 1.24	4.11 1.34	4.88 1.57	6.34 2.02	3.67 1.29	4.04 1.43	4.42 1.54	5.25 1.82	6.01 2.07	6.82 2.34
17069	2.95 0.96	3.30 1.06	3.63 1.16	3.96 1.26	4.70 1.48	6.12 1.92	3.54 1.22	3.91 1.34	4.26 1.45	5.05 1.72	5.80 1.97	6.58 2.23
17374							3.41 1.16	3.78 1.28	4.11 1.38	4.88 1.63	5.60 1.86	6.34 2.11
17678							3.30 1.10	3.65 1.21	3.96 1.31	4.70 1.54	5.40 1.76	6.12 1.99
17983							3.19 1.05	3.52 1.15	3.83 1.25	4.55 1.47	5.23 1.67	5.93 1.89
18288							3.08 1.00	3.41 1.09	3.69 1.18	4.40 1.40	5.05 1.59	5.73 1.80

American National Standard SJI 100 - 2020

STANDARD ASD LOAD TABLE

OPEN WEB STEEL JOISTS, K-SERIES

Based on a 50 ksi (345 MPa) Maximum Yield Strength
Adopted by the Steel Joist Institute November 4, 1985
Revised to May 18, 2010 – Effective December 31, 2010

The **BLACK** figures in the Load Table give the TOTAL safe uniformly distributed load-carrying capacities, in pounds per linear foot (kiloNewtons per meter), of **ASD** K-Series Steel Joists.

The approximate joist weights, in pounds per linear foot (kiloNewtons per meter), given in the Load Table may be added to the other building weights to determine the DEAD load. In all cases the DEAD load, including the joist self-weight, must be deducted from the TOTAL load to determine the LIVE load. The approximate joist weights do not include accessories.

The **RED** figures in the Load Table represent the uniform load, in pounds per linear foot (kiloNewtons per meter), which will produce an approximate joist deflection of 1/360 of the span. This load can be linearly prorated to obtain the uniform load for supplementary deflection criteria (i.e. a uniform load which will produce a joist deflection of 1/240 of the span may be obtained by multiplying the **RED** figure by 360/240). In no case shall the prorated load exceed the TOTAL load-carrying capacity of the joist.

Where the joist span is in the **RED SHADED** area of the Load Table, the row of bridging nearest the mid span shall be diagonal bridging with bolted connections at chords and intersections. Hoisting cables shall not be released until this row of bolted diagonal bridging is completely installed. The **RED SHADED** area extends up through 60'–0" (18288 mm).

The approximate gross moment of inertia (not adjusted for shear deformation) of a standard joist listed in the Load Table may be determined as follows:

$I_j = 26.767(W)(L^3)(10^{-6})$ in^4 or $2.6953(W)(L^3)(10^{-5})$ mm^4, where W= **RED** figure in the Load Table, and
L = (span – 0.33) in feet or (span – 102) in millimeters

The TOTAL safe uniformly distributed load-carrying capacities, in pounds per linear foot (kiloNewtons per meter), of **ASD** K-Series Steel Joists shall not exceed 550 plf (8.02 kN/m) for spans shorter than what is explicitly shown in the Load Table. The maximum prorated RED load shall not exceed 550 plf (8.02 kN/m) (the TOTAL load-carrying capacity of the joist as given in the Standard **ASD** Load Table for Open Web Steel Joists, K-Series).

Loads for span increments not explicitly given in the Load Table may be determined using linear interpolation between the load values given in adjacent span columns.

For the proper handling of concentrated and/or varying loads, see Section 2.4 in the Code of Standard Practice for Steel Joist and Joist Girders.

ASD

STANDARD LOAD TABLE FOR OPEN WEB STEEL JOISTS, K-SERIES
Based on a 50 ksi Maximum Yield Strength - Loads Shown In Pounds Per Linear Foot (plf)

Joist Designation	10K1	12K1	12K3	12K5	14K1	14K3	14K4	14K6	16K2	16K3	16K4	16K5	16K6	16K7	16K9
Depth (in.)	10	12	12	12	14	14	14	14	16	16	16	16	16	16	16
Approx. Wt (lbs./ft.)	5.0	5.0	5.7	7.1	5.2	6.0	6.7	7.7	5.5	6.3	7.0	7.5	8.1	8.6	10.0
Span (ft.) ↓															
10	550 550														
11	550 542														
12	550 455	550 550	550 550	550 550											
13	479 363	550 510	550 510	550 510											
14	412 289	500 425	550 463	550 463	550 550	550 550	550 550	550 550							
15	358 234	434 344	543 428	550 434	511 475	550 507	550 507	550 507							
16	313 192	380 282	476 351	550 396	448 390	550 467	550 467	550 467	550 550	550 550	550 550	550 550	550 550	550 550	550 550
17	277 159	336 234	420 291	550 366	395 324	495 404	550 443	550 443	512 488	550 526	550 526	550 526	550 526	550 526	550 526
18	246 134	299 197	374 245	507 317	352 272	441 339	530 397	550 408	456 409	508 456	550 490	550 490	550 490	550 490	550 490
19	221 113	268 167	335 207	454 269	315 230	395 287	475 336	550 383	408 347	455 386	547 452	550 455	550 455	550 455	550 455
20	199 97	241 142	302 177	409 230	284 197	356 246	428 287	525 347	368 297	410 330	493 386	550 426	550 426	550 426	550 426
21		218 123	273 153	370 198	257 170	322 212	388 248	475 299	333 255	371 285	447 333	503 373	548 405	550 406	550 406
22		199 106	249 132	337 172	234 147	293 184	353 215	432 259	303 222	337 247	406 289	458 323	498 351	550 385	550 385
23		181 93	227 116	308 150	214 128	268 160	322 188	395 226	277 194	308 216	371 252	418 282	455 307	507 339	550 363
24		166 81	208 101	282 132	196 113	245 141	295 165	362 199	254 170	283 189	340 221	384 248	418 269	465 298	550 346
25					180 100	226 124	272 145	334 175	234 150	260 167	313 195	353 219	384 238	428 263	514 311
26					166 88	209 110	251 129	308 156	216 133	240 148	289 173	326 194	355 211	395 233	474 276
27					154 79	193 98	233 115	285 139	200 119	223 132	268 155	302 173	329 188	366 208	439 246
28					143 70	180 88	216 103	265 124	186 106	207 118	249 138	281 155	306 168	340 186	408 220
29									173 95	193 106	232 124	261 139	285 151	317 167	380 198
30									161 86	180 96	216 112	244 126	266 137	296 151	355 178
31									151 78	168 87	203 101	228 114	249 124	277 137	332 161
32									142 71	158 79	190 92	214 103	233 112	259 124	311 147

ASD

STANDARD LOAD TABLE FOR OPEN WEB STEEL JOISTS, K-SERIES
Based on a 50 ksi Maximum Yield Strength - Loads Shown In Pounds Per Linear Foot (plf)

Joist Designation	18K3	18K4	18K5	18K6	18K7	18K9	18K10	20K3	20K4	20K5	20K6	20K7	20K9	20K10	22K4	22K5	22K6	22K7	22K9	22K10	22K11
Depth (In.)	18	18	18	18	18	18	18	20	20	20	20	20	20	20	22	22	22	22	22	22	22
Approx. Wt. (lbs./ft.)	6.4	7.2	7.7	8.4	8.9	10.1	11.6	6.5	7.2	7.7	8.4	8.9	10.1	11.6	7.3	7.7	8.5	9.0	10.2	11.7	11.9
Span (ft.) ↓																					
18	550	550	550	550	550	550	550														
	550	550	550	550	550	550	550														
19	514	550	550	550	550	550	550	550	550	550	550	550	550	550							
	494	523	523	523	523	523	523	550	550	550	550	550	550	550							
20	463	550	550	550	550	550	550	517	550	550	550	550	550	550							
	423	490	490	490	490	490	490	517	550	550	550	550	550	550							
21	420	506	550	550	550	550	550	468	550	550	550	550	550	550	550	550	550	550	550	550	550
	364	426	460	460	460	460	460	453	520	520	520	520	520	520	550	550	550	550	550	550	550
22	382	460	518	550	550	550	550	426	514	550	550	550	550	550	550	550	550	550	550	550	550
	316	370	414	438	438	438	438	393	461	490	490	490	490	490	548	548	548	548	548	548	548
23	349	420	473	516	550	550	550	389	469	529	550	550	550	550	518	550	550	550	550	550	550
	276	323	362	393	418	418	418	344	402	451	468	468	468	468	491	518	518	518	518	518	518
24	320	385	434	473	526	550	550	357	430	485	528	550	550	550	475	536	550	550	550	550	550
	242	284	318	345	382	396	396	302	353	396	430	448	448	448	431	483	495	495	495	495	495
25	294	355	400	435	485	550	550	329	396	446	486	541	550	550	438	493	537	550	550	550	550
	214	250	281	305	337	377	377	266	312	350	380	421	426	426	381	427	464	474	474	474	474
26	272	328	369	402	448	538	550	304	366	412	449	500	550	550	404	455	496	550	550	550	550
	190	222	249	271	299	354	361	236	277	310	337	373	405	405	338	379	411	454	454	454	454
27	252	303	342	372	415	498	550	281	339	382	416	463	550	550	374	422	459	512	550	550	550
	169	198	222	241	267	315	347	211	247	277	301	333	389	389	301	337	367	406	432	432	432
28	234	282	318	346	385	463	548	261	315	355	386	430	517	550	348	392	427	475	550	550	550
	151	177	199	216	239	282	331	189	221	248	269	298	353	375	270	302	328	364	413	413	413
29	218	263	296	322	359	431	511	243	293	330	360	401	482	550	324	365	398	443	532	550	550
	136	159	179	194	215	254	298	170	199	223	242	268	317	359	242	272	295	327	387	399	399
30	203	245	276	301	335	402	477	227	274	308	336	374	450	533	302	341	371	413	497	550	550
	123	144	161	175	194	229	269	153	179	201	218	242	286	336	219	245	266	295	349	385	385
31	190	229	258	281	313	376	446	212	256	289	314	350	421	499	283	319	347	387	465	550	550
	111	130	146	158	175	207	243	138	162	182	198	219	259	304	198	222	241	267	316	369	369
32	178	215	242	264	294	353	418	199	240	271	295	328	395	468	265	299	326	363	436	517	549
	101	118	132	144	159	188	221	126	147	165	179	199	235	276	180	201	219	242	287	337	355
33	168	202	228	248	276	332	393	187	226	254	277	309	371	440	249	281	306	341	410	486	532
	92	108	121	131	145	171	201	114	134	150	163	181	214	251	164	183	199	221	261	307	334
34	158	190	214	233	260	312	370	176	212	239	261	290	349	414	235	265	288	321	386	458	516
	84	98	110	120	132	156	184	105	122	137	149	165	195	229	149	167	182	202	239	280	314
35	149	179	202	220	245	294	349	166	200	226	246	274	329	390	221	249	272	303	364	432	494
	77	90	101	110	121	143	168	96	112	126	137	151	179	210	137	153	167	185	219	257	292
36	141	169	191	208	232	278	330	157	189	213	232	259	311	369	209	236	257	286	344	408	467
	70	82	92	101	111	132	154	88	103	115	125	139	164	193	126	141	153	169	201	236	269
37								148	179	202	220	245	294	349	198	223	243	271	325	386	442
								81	95	106	115	128	151	178	116	130	141	156	185	217	247
38								141	170	191	208	232	279	331	187	211	230	256	308	366	419
								74	87	98	106	118	139	164	107	119	130	144	170	200	228
39								133	161	181	198	220	265	314	178	200	218	243	292	347	397
								69	81	90	98	109	129	151	98	110	120	133	157	185	211
40								127	153	172	188	209	251	298	169	190	207	231	278	330	377
								64	75	84	91	101	119	140	91	102	111	123	146	171	195
41															161	181	197	220	264	314	359
															85	95	103	114	135	159	181
42															153	173	188	209	252	299	342
															79	88	96	106	126	148	168
43															146	165	179	200	240	285	326
															73	82	89	99	117	138	157
44															139	157	171	191	229	272	311
															68	76	83	92	109	128	146

ASD

STANDARD LOAD TABLE FOR OPEN WEB STEEL JOISTS, K-SERIES
Based on a 50 ksi Maximum Yield Strength - Loads Shown In Pounds Per Linear Foot (plf)

Joist Designation	24K4	24K5	24K6	24K7	24K8	24K9	24K10	24K12	26K5	26K6	26K7	26K8	26K9	26K10	26K12
Depth (In.)	24	24	24	24	24	24	24	24	26	26	26	26	26	26	26
Approx. Wt. (lbs./ft.)	7.8	7.9	8.5	9.0	9.4	10.3	11.7	13.5	8.1	8.6	9.0	9.7	10.4	11.8	13.7
Span (ft.) ↓															
23	550	550	550	550	550	550	550	550							
	550	550	550	550	550	550	550	550							
24	520	550	550	550	550	550	550	550							
	516	544	544	544	544	544	544	544							
25	479	540	550	550	550	550	550	550	550	550	550	550	550	550	550
	456	511	520	520	520	520	520	520	550	550	550	550	550	550	550
26	442	499	543	550	550	550	550	550	542	550	550	550	550	550	550
	405	453	493	499	499	499	499	499	535	541	541	541	541	541	541
27	410	462	503	550	550	550	550	550	502	547	550	550	550	550	550
	361	404	439	479	479	479	479	479	477	519	522	522	522	522	522
28	381	429	467	521	550	550	550	550	466	508	550	550	550	550	550
	323	362	393	436	456	456	456	456	427	464	501	501	501	501	501
29	354	400	435	485	536	550	550	550	434	473	527	550	550	550	550
	290	325	354	392	429	436	436	436	384	417	463	479	479	479	479
30	331	373	406	453	500	544	550	550	405	441	492	544	550	550	550
	262	293	319	353	387	419	422	422	346	377	417	457	459	459	459
31	310	349	380	424	468	510	550	550	379	413	460	509	550	550	550
	237	266	289	320	350	379	410	410	314	341	378	413	444	444	444
32	290	327	357	397	439	478	549	549	356	387	432	477	519	549	549
	215	241	262	290	318	344	393	393	285	309	343	375	407	431	431
33	273	308	335	373	413	449	532	532	334	364	406	448	488	532	532
	196	220	239	265	289	313	368	368	259	282	312	342	370	404	404
34	257	290	315	351	388	423	502	516	315	343	382	422	459	516	516
	179	201	218	242	264	286	337	344	237	257	285	312	338	378	378
35	242	273	297	331	366	399	473	501	297	323	360	398	433	501	501
	164	184	200	221	242	262	308	324	217	236	261	286	310	356	356
36	229	258	281	313	346	377	447	487	280	305	340	376	409	486	487
	150	169	183	203	222	241	283	306	199	216	240	263	284	334	334
37	216	244	266	296	327	356	423	474	265	289	322	356	387	460	474
	138	155	169	187	205	222	260	290	183	199	221	242	262	308	315
38	205	231	252	281	310	338	401	461	251	274	305	337	367	436	461
	128	143	156	172	189	204	240	275	169	184	204	223	241	284	299
39	195	219	239	266	294	320	380	449	238	260	289	320	348	413	449
	118	132	144	159	174	189	222	261	156	170	188	206	223	262	283
40	185	208	227	253	280	304	361	438	227	247	275	304	331	393	438
	109	122	133	148	161	175	206	247	145	157	174	191	207	243	269
41	176	198	216	241	266	290	344	427	215	235	262	289	315	374	427
	101	114	124	137	150	162	191	235	134	146	162	177	192	225	256
42	168	189	206	229	253	276	327	417	205	224	249	275	300	356	417
	94	106	115	127	139	151	177	224	125	136	150	164	178	210	244
43	160	180	196	219	242	263	312	406	196	213	238	263	286	339	407
	88	98	107	118	130	140	165	213	116	126	140	153	166	195	232
44	153	172	187	209	231	251	298	387	187	204	227	251	273	324	398
	82	92	100	110	121	131	154	199	108	118	131	143	155	182	222
45	146	164	179	199	220	240	285	370	179	194	217	240	261	310	389
	76	86	93	103	113	122	144	185	101	110	122	133	145	170	212
46	139	157	171	191	211	230	272	354	171	186	207	229	250	296	380
	71	80	87	97	106	114	135	174	95	103	114	125	135	159	203
47	133	150	164	183	202	220	261	339	164	178	199	219	239	284	369
	67	75	82	90	99	107	126	163	89	96	107	117	127	149	192
48	128	144	157	175	194	211	250	325	157	171	190	210	229	272	353
	63	70	77	85	93	101	118	153	83	90	100	110	119	140	180
49									150	164	183	202	220	261	339
									78	85	94	103	112	131	169
50									144	157	175	194	211	250	325
									73	80	89	97	105	124	159
51									139	151	168	186	203	241	313
									69	75	83	91	99	116	150
52									133	145	162	179	195	231	301
									65	71	79	86	93	110	142

ASD

STANDARD LOAD TABLE FOR OPEN WEB STEEL JOISTS, K-SERIES
Based on a 50 ksi Maximum Yield Strength - Loads Shown In Pounds Per Linear Foot (plf)

Joist Designation	28K6	28K7	28K8	28K9	28K10	28K12	30K7	30K8	30K9	30K10	30K11	30K12
Depth (In.)	28	28	28	28	28	28	30	30	30	30	30	30
Approx. Wt. (lbs./ft.)	8.9	9.2	9.8	10.5	11.8	14.5	9.6	10.0	10.6	11.9	13.3	15.0
Span (ft.) ↓												
27	550 550	550 550	550 550	550 550	550 550	550 550						
28	548 541	550 543	550 543	550 543	550 543	550 543						
29	511 486	550 522	550 522	550 522	550 522	550 522	550 550	550 550	550 550	550 550	550 550	550 550
30	477 439	531 486	550 500	550 500	550 500	550 500	550 543	550 543	550 543	550 543	550 543	550 543
31	446 397	497 440	550 480	550 480	550 480	550 480	534 508	550 520	550 520	550 520	550 520	550 520
32	418 361	466 400	515 438	549 463	549 463	549 463	501 461	549 500	549 500	549 500	549 500	549 500
33	393 329	438 364	484 399	527 432	532 435	532 435	471 420	520 460	532 468	532 468	532 468	532 468
34	370 300	412 333	456 364	496 395	516 410	516 410	443 384	490 420	516 441	516 441	516 441	516 441
35	349 275	389 305	430 333	468 361	501 389	501 389	418 351	462 384	501 415	501 415	501 415	501 415
36	330 252	367 280	406 306	442 332	487 366	487 366	395 323	436 353	475 383	487 392	487 392	487 392
37	312 232	348 257	384 282	418 305	474 344	474 344	373 297	413 325	449 352	474 374	474 374	474 374
38	296 214	329 237	364 260	396 282	461 325	461 325	354 274	391 300	426 325	461 353	461 353	461 353
39	280 198	313 219	346 240	376 260	447 306	449 308	336 253	371 277	404 300	449 333	449 333	449 333
40	266 183	297 203	328 222	357 241	424 284	438 291	319 234	353 256	384 278	438 315	438 315	438 315
41	253 170	283 189	312 206	340 224	404 263	427 277	303 217	335 238	365 258	427 300	427 300	427 300
42	241 158	269 175	297 192	324 208	384 245	417 264	289 202	320 221	348 240	413 282	417 284	417 284
43	230 147	257 163	284 179	309 194	367 228	407 252	276 188	305 206	332 223	394 263	407 270	407 270
44	220 137	245 152	271 167	295 181	350 212	398 240	263 176	291 192	317 208	376 245	398 258	398 258
45	210 128	234 142	259 156	282 169	334 198	389 229	251 164	278 179	303 195	359 229	389 246	389 246
46	201 120	224 133	248 146	270 158	320 186	380 219	241 153	266 168	290 182	344 214	380 236	380 236
47	192 112	214 125	237 136	258 148	306 174	372 210	230 144	255 157	277 171	329 201	372 226	372 226
48	184 105	206 117	227 128	247 139	294 163	365 201	221 135	244 148	266 160	315 188	362 215	365 216
49	177 99	197 110	218 120	237 130	282 153	357 193	212 127	234 139	255 150	303 177	347 202	357 207
50	170 93	189 103	209 113	228 123	270 144	350 185	203 119	225 130	245 141	291 166	333 190	350 199
51	163 88	182 97	201 106	219 115	260 136	338 175	195 112	216 123	235 133	279 157	320 179	343 192
52	157 83	175 92	193 100	210 109	250 128	325 165	188 106	208 116	226 126	268 148	308 169	336 184
53	151 78	168 87	186 95	203 103	240 121	313 156	181 100	200 109	218 119	258 140	296 159	330 177
54	145 74	162 82	179 89	195 97	232 114	301 147	174 94	192 103	209 112	249 132	285 150	324 170
55	140 70	156 77	173 85	188 92	223 108	290 139	168 89	185 98	202 106	240 125	275 142	312 161
56	135 66	151 73	166 80	181 87	215 102	280 132	162 84	179 92	195 100	231 118	265 135	301 153
57							156 80	173 88	188 95	223 112	256 128	290 145
58							151 76	167 83	181 90	215 106	247 121	280 137
59							146 72	161 79	175 86	208 101	239 115	271 130
60							141 69	156 75	169 81	201 96	231 109	262 124

ASD

METRIC LOAD TABLE FOR OPEN WEB STEEL JOISTS, K-SERIES
Based On A 345 MPa Maximum Yield Strength - Loads Shown In Kilonewtons Per Meter (kN/m)

Joist Designation	10K1	12K1	12K3	12K5	14K1	14K3	14K4	14K6	16K2	16K3	16K4	16K5	16K6	16K7	16K9
Depth (mm)	254	305	305	305	356	356	356	356	406	406	406	406	406	406	406
Approx. Wt (kN/m)	0.07	0.07	0.08	0.10	0.08	0.09	0.10	0.11	0.08	0.09	0.10	0.11	0.12	0.13	0.15
Span (mm) ↓															
3048	8.02 8.02														
3353	8.02 7.90														
3658	8.02 6.64	8.02 8.02	8.02 8.02	8.02 8.02											
3962	6.99 5.29	8.02 7.44	8.02 7.44	8.02 7.44											
4267	6.01 4.21	7.29 6.20	8.02 6.75	8.02 6.75	8.02 8.02	8.02 8.02	8.02 8.02	8.02 8.02							
4572	5.22 3.41	6.33 5.02	7.92 6.24	8.02 6.33	7.45 6.93	8.02 7.39	8.02 7.39	8.02 7.39							
4877	4.56 2.80	5.54 4.11	6.94 5.12	8.02 5.77	6.53 5.69	8.02 6.81	8.02 6.81	8.02 6.81	8.02 8.02	8.02 8.02	8.02 8.02	8.02 8.02	8.02 8.02	8.02 8.02	8.02 8.02
5182	4.04 2.32	4.90 3.41	6.12 4.24	8.02 5.34	5.76 4.72	7.22 5.89	8.02 6.46	8.02 6.46	7.47 7.12	8.02 7.67	8.02 7.67	8.02 7.67	8.02 7.67	8.02 7.67	8.02 7.67
5486	3.59 1.95	4.36 2.87	5.45 3.57	7.39 4.62	5.13 3.96	6.43 4.94	7.73 5.79	8.02 5.95	6.65 5.96	7.41 6.65	8.02 7.15	8.02 7.15	8.02 7.15	8.02 7.15	8.02 7.15
5791	3.22 1.64	3.91 2.43	4.88 3.02	6.62 3.92	4.59 3.35	5.76 4.18	6.93 4.90	8.02 5.58	5.95 5.06	6.64 5.63	7.98 6.59	8.02 6.64	8.02 6.64	8.02 6.64	8.02 6.64
6096	2.90 1.41	3.51 2.07	4.40 2.58	5.96 3.35	4.14 2.87	5.19 3.59	6.24 4.18	7.66 5.06	5.37 4.33	5.98 4.81	7.19 5.63	8.02 6.21	8.02 6.21	8.02 6.21	8.02 6.21
6401		3.18 1.79	3.98 2.23	5.39 2.88	3.75 2.48	4.69 3.09	5.66 3.61	6.93 4.36	4.85 3.72	5.41 4.15	6.52 4.85	7.34 5.44	7.99 5.91	8.02 5.92	8.02 5.92
6706		2.90 1.54	3.63 1.92	4.91 2.51	3.41 2.14	4.27 2.68	5.15 3.13	6.30 3.77	4.42 3.23	4.91 3.60	5.92 4.21	6.68 4.71	7.26 5.12	8.02 5.61	8.02 5.61
7010		2.64 1.35	3.31 1.69	4.49 2.18	3.12 1.86	3.91 2.33	4.69 2.74	5.76 3.29	4.04 2.83	4.49 3.15	5.41 3.67	6.10 4.11	6.64 4.48	7.39 4.94	8.02 5.29
7315		2.42 1.18	3.03 1.47	4.11 1.92	2.86 1.64	3.57 2.05	4.30 2.40	5.28 2.90	3.70 2.48	4.13 2.75	4.96 3.22	5.60 3.61	6.10 3.92	6.78 4.34	8.02 5.04
7620					2.62 1.45	3.29 1.80	3.96 2.11	4.87 2.55	3.41 2.18	3.79 2.43	4.56 2.84	5.15 3.19	5.60 3.47	6.24 3.83	7.50 4.53
7925					2.42 1.28	3.05 1.60	3.66 1.88	4.49 2.27	3.15 1.94	3.50 2.15	4.21 2.52	4.75 2.83	5.18 3.07	5.76 3.40	6.91 4.02
8230					2.24 1.15	2.81 1.43	3.40 1.67	4.15 2.02	2.91 1.73	3.25 1.92	3.91 2.26	4.40 2.52	4.80 2.74	5.34 3.03	6.40 3.59
8534					2.08 1.02	2.62 1.28	3.15 1.50	3.86 1.80	2.71 1.54	3.02 1.72	3.63 2.01	4.10 2.26	4.46 2.45	4.96 2.71	5.95 3.21
8839									2.52 1.38	2.81 1.54	3.38 1.80	3.80 2.02	4.15 2.20	4.62 2.43	5.54 2.88
9144									2.34 1.25	2.62 1.40	3.15 1.63	3.56 1.83	3.88 1.99	4.31 2.20	5.18 2.59
9449									2.20 1.13	2.45 1.26	2.96 1.47	3.32 1.66	3.63 1.80	4.04 1.99	4.84 2.34
9754									2.07 1.03	2.30 1.15	2.77 1.34	3.12 1.50	3.40 1.63	3.77 1.80	4.53 2.14

ASD

METRIC LOAD TABLE FOR OPEN WEB STEEL JOISTS, K-SERIES
Based On A 345 MPa Maximum Yield Strength - Loads Shown In Kilonewtons Per Meter (kN/m)

Joist Designation	18K3	18K4	18K5	18K6	18K7	18K9	18K10	20K3	20K4	20K5	20K6	20K7	20K9	20K10	22K4	22K5	22K6	22K7	22K9	22K10	22K11
Depth (mm)	457	457	457	457	457	457	457	508	508	508	508	508	508	508	559	559	559	559	559	559	559
Approx. Wt. (kN/m)	0.09	0.11	0.11	0.12	0.13	0.15	0.17	0.09	0.11	0.11	0.12	0.13	0.15	0.17	0.11	0.11	0.12	0.13	0.15	0.17	0.17
Span (mm) ↓																					
5486	8.02	8.02	8.02	8.02	8.02	8.02	8.02														
	8.02	8.02	8.02	8.02	8.02	8.02	8.02														
5791	7.50	8.02	8.02	8.02	8.02	8.02	8.02	8.02	8.02	8.02	8.02	8.02	8.02	8.02							
	7.20	7.63	7.63	7.63	7.63	7.63	7.63	8.02	8.02	8.02	8.02	8.02	8.02	8.02							
6096	6.75	8.02	8.02	8.02	8.02	8.02	8.02	7.54	8.02	8.02	8.02	8.02	8.02	8.02							
	6.17	7.15	7.15	7.15	7.15	7.15	7.15	7.54	8.02	8.02	8.02	8.02	8.02	8.02							
6401	6.12	7.38	8.02	8.02	8.02	8.02	8.02	6.82	8.02	8.02	8.02	8.02	8.02	8.02	8.02	8.02	8.02	8.02	8.02	8.02	8.02
	5.31	6.21	6.71	6.71	6.71	6.71	6.71	6.61	7.58	7.58	7.58	7.58	7.58	7.58	8.02	8.02	8.02	8.02	8.02	8.02	8.02
6706	5.57	6.71	7.55	8.02	8.02	8.02	8.02	6.21	7.50	8.02	8.02	8.02	8.02	8.02	8.02	8.02	8.02	8.02	8.02	8.02	8.02
	4.61	5.39	6.04	6.39	6.39	6.39	6.39	5.73	6.72	7.15	7.15	7.15	7.15	7.15	7.99	7.99	7.99	7.99	7.99	7.99	7.99
7010	5.09	6.12	6.90	7.53	8.02	8.02	8.02	5.67	6.84	7.72	8.02	8.02	8.02	8.02	7.55	8.02	8.02	8.02	8.02	8.02	8.02
	4.02	4.71	5.28	5.73	6.10	6.10	6.10	5.02	5.86	6.58	6.82	6.82	6.82	6.82	7.16	7.55	7.55	7.55	7.55	7.55	7.55
7315	4.67	5.61	6.33	6.90	7.67	8.02	8.02	5.21	6.27	7.07	7.70	8.02	8.02	8.02	6.93	7.82	8.02	8.02	8.02	8.02	8.02
	3.53	4.14	4.64	5.03	5.57	5.77	5.77	4.40	5.15	5.77	6.27	6.53	6.53	6.53	6.28	7.04	7.22	7.22	7.22	7.22	7.22
7620	4.29	5.18	5.83	6.34	7.07	8.02	8.02	4.80	5.77	6.50	7.09	7.89	8.02	8.02	6.39	7.19	7.83	8.02	8.02	8.02	8.02
	3.12	3.64	4.10	4.45	4.91	5.50	5.50	3.88	4.55	5.10	5.54	6.14	6.21	6.21	5.56	6.23	6.77	6.91	6.91	6.91	6.91
7925	3.96	4.78	5.38	5.86	6.53	7.85	8.02	4.43	5.34	6.01	6.55	7.29	8.02	8.02	5.89	6.64	7.23	8.02	8.02	8.02	8.02
	2.77	3.23	3.63	3.95	4.36	5.16	5.26	3.44	4.04	4.52	4.91	5.44	5.91	5.91	4.93	5.53	5.99	6.62	6.62	6.62	6.62
8230	3.67	4.42	4.99	5.42	6.05	7.26	8.02	4.10	4.94	5.57	6.07	6.75	8.02	8.02	5.45	6.15	6.69	7.47	8.02	8.02	8.02
	2.46	2.88	3.23	3.51	3.89	4.59	5.06	3.07	3.60	4.04	4.39	4.85	5.67	5.67	4.39	4.91	5.35	5.92	6.30	6.30	6.30
8534	3.41	4.11	4.64	5.04	5.61	6.75	7.99	3.80	4.59	5.18	5.63	6.27	7.54	8.02	5.07	5.72	6.23	6.93	8.02	8.02	8.02
	2.20	2.58	2.90	3.15	3.48	4.11	4.83	2.75	3.22	3.61	3.92	4.34	5.15	5.47	3.94	4.40	4.78	5.31	6.02	6.02	6.02
8839	3.18	3.83	4.31	4.69	5.23	6.28	7.45	3.54	4.27	4.81	5.25	5.85	7.03	8.02	4.72	5.32	5.80	6.46	7.76	8.02	8.02
	1.98	2.32	2.61	2.83	3.13	3.70	4.34	2.48	2.90	3.25	3.53	3.91	4.62	5.23	3.53	3.96	4.30	4.77	5.64	5.82	5.82
9144	2.96	3.57	4.02	4.39	4.88	5.86	6.96	3.31	3.99	4.49	4.90	5.45	6.56	7.77	4.40	4.97	5.41	6.02	7.25	8.02	8.02
	1.79	2.10	2.34	2.55	2.83	3.34	3.92	2.23	2.61	2.93	3.18	3.53	4.17	4.90	3.19	3.57	3.88	4.30	5.09	5.61	5.61
9449	2.77	3.34	3.76	4.10	4.56	5.48	6.50	3.09	3.73	4.21	4.58	5.10	6.14	7.28	4.13	4.65	5.06	5.64	6.78	8.02	8.02
	1.61	1.89	2.13	2.30	2.55	3.02	3.54	2.01	2.36	2.65	2.88	3.19	3.77	4.43	2.88	3.23	3.51	3.89	4.61	5.38	5.38
9754	2.59	3.13	3.53	3.85	4.29	5.15	6.10	2.90	3.50	3.95	4.30	4.78	5.76	6.82	3.86	4.36	4.75	5.29	6.36	7.54	8.01
	1.47	1.72	1.92	2.10	2.32	2.74	3.22	1.83	2.14	2.40	2.61	2.90	3.42	4.02	2.62	2.93	3.19	3.53	4.18	4.91	5.18
10058	2.45	2.94	3.32	3.61	4.02	4.84	5.73	2.72	3.29	3.70	4.04	4.50	5.41	6.42	3.63	4.10	4.46	4.97	5.98	7.09	7.76
	1.34	1.57	1.76	1.91	2.11	2.49	2.93	1.66	1.95	2.18	2.37	2.64	3.12	3.66	2.39	2.67	2.90	3.22	3.80	4.48	4.87
10363	2.30	2.77	3.12	3.40	3.79	4.55	5.39	2.56	3.09	3.48	3.80	4.23	5.09	6.04	3.42	3.86	4.20	4.68	5.63	6.68	7.53
	1.22	1.43	1.60	1.75	1.92	2.27	2.68	1.53	1.78	1.99	2.17	2.40	2.84	3.34	2.17	2.43	2.65	2.94	3.48	4.08	4.58
10668	2.17	2.61	2.94	3.21	3.57	4.29	5.09	2.42	2.91	3.29	3.59	3.99	4.80	5.69	3.22	3.63	3.96	4.42	5.31	6.30	7.20
	1.12	1.31	1.47	1.60	1.76	2.08	2.45	1.40	1.63	1.83	1.99	2.20	2.61	3.06	1.99	2.23	2.43	2.69	3.19	3.75	4.26
10973	2.05	2.46	2.78	3.03	3.38	4.05	4.81	2.29	2.75	3.10	3.38	3.77	4.53	5.38	3.05	3.44	3.75	4.17	5.02	5.95	6.81
	1.02	1.19	1.34	1.47	1.61	1.92	2.24	1.28	1.50	1.67	1.82	2.02	2.39	2.81	1.83	2.05	2.23	2.46	2.93	3.44	3.92
11278								2.15	2.61	2.94	3.21	3.57	4.29	5.09	2.88	3.25	3.54	3.95	4.74	5.63	6.45
								1.18	1.38	1.54	1.67	1.86	2.20	2.59	1.69	1.89	2.05	2.27	2.69	3.16	3.60
11582								2.05	2.48	2.78	3.03	3.38	4.07	4.83	2.72	3.07	3.35	3.73	4.49	5.34	6.11
								1.07	1.26	1.43	1.54	1.72	2.02	2.39	1.56	1.73	1.89	2.10	2.48	2.91	3.32
11887								1.94	2.34	2.64	2.88	3.21	3.86	4.58	2.59	2.91	3.18	3.54	4.26	5.06	5.79
								1.00	1.18	1.31	1.43	1.59	1.88	2.20	1.43	1.60	1.75	1.94	2.29	2.69	3.07
12192								1.85	2.23	2.51	2.74	3.05	3.66	4.34	2.46	2.77	3.02	3.37	4.05	4.81	5.50
								0.93	1.09	1.22	1.32	1.47	1.73	2.04	1.32	1.48	1.61	1.79	2.13	2.49	2.84
12497															2.34	2.64	2.87	3.21	3.85	4.58	5.23
															1.24	1.38	1.50	1.66	1.97	2.32	2.64
12802															2.23	2.52	2.74	3.05	3.67	4.36	4.99
															1.15	1.28	1.40	1.54	1.83	2.15	2.45
13106															2.13	2.40	2.61	2.91	3.50	4.15	4.75
															1.06	1.19	1.29	1.44	1.70	2.01	2.29
13411															2.02	2.29	2.49	2.78	3.34	3.96	4.53
															0.99	1.10	1.21	1.34	1.59	1.86	2.13

ASD

METRIC LOAD TABLE FOR OPEN WEB STEEL JOISTS, K-SERIES
Based On A 345 MPa Maximum Yield Strength - Loads Shown In Kilonewtons Per Meter (kN/m)

Joist Designation	24K4	24K5	24K6	24K7	24K8	24K9	24K10	24K12	26K5	26K6	26K7	26K8	26K9	26K10	26K12
Depth (mm)	610	610	610	610	610	610	610	610	660	660	660	660	660	660	660
Approx. Wt. (kN/m)	0.11	0.12	0.12	0.13	0.14	0.15	0.17	0.20	0.12	0.13	0.13	0.14	0.15	0.17	0.20
Span (mm) ↓															
7010	8.02	8.02	8.02	8.02	8.02	8.02	8.02	8.02							
	8.02	8.02	8.02	8.02	8.02	8.02	8.02	8.02							
7315	7.58	8.02	8.02	8.02	8.02	8.02	8.02	8.02							
	7.53	7.93	7.93	7.93	7.93	7.93	7.93	7.93							
7620	6.99	7.88	8.02	8.02	8.02	8.02	8.02	8.02	8.02	8.02	8.02	8.02	8.02	8.02	8.02
	6.65	7.45	7.58	7.58	7.58	7.58	7.58	7.58	8.02	8.02	8.02	8.02	8.02	8.02	8.02
7925	6.45	7.28	7.92	8.02	8.02	8.02	8.02	8.02	7.90	8.02	8.02	8.02	8.02	8.02	8.02
	5.91	6.61	7.19	7.28	7.28	7.28	7.28	7.28	7.80	7.89	7.89	7.89	7.89	7.89	7.89
8230	5.98	6.74	7.34	8.02	8.02	8.02	8.02	8.02	7.32	7.98	8.02	8.02	8.02	8.02	8.02
	5.26	5.89	6.40	6.99	6.99	6.99	6.99	6.99	6.96	7.57	7.61	7.61	7.61	7.61	7.61
8534	5.56	6.26	6.81	7.60	8.02	8.02	8.02	8.02	6.80	7.41	8.02	8.02	8.02	8.02	8.02
	4.71	5.28	5.73	6.36	6.65	6.65	6.65	6.65	6.23	6.77	7.31	7.31	7.31	7.31	7.31
8839	5.16	5.83	6.34	7.07	7.82	8.02	8.02	8.02	6.33	6.90	7.69	8.02	8.02	8.02	8.02
	4.23	4.74	5.16	5.72	6.26	6.36	6.36	6.36	5.60	6.08	6.75	6.99	6.99	6.99	6.99
9144	4.83	5.44	5.92	6.61	7.29	7.93	8.02	8.02	5.91	6.43	7.18	7.93	8.02	8.02	8.02
	3.82	4.27	4.65	5.15	5.64	6.11	6.15	6.15	5.04	5.50	6.08	6.66	6.69	6.69	6.69
9449	4.52	5.09	5.54	6.18	6.82	7.44	8.02	8.02	5.53	6.02	6.71	7.42	8.02	8.02	8.02
	3.45	3.88	4.21	4.67	5.10	5.53	5.98	5.98	4.58	4.97	5.51	6.02	6.47	6.47	6.47
9754	4.23	4.77	5.21	5.79	6.40	6.97	8.01	8.01	5.19	5.64	6.30	6.96	7.57	8.01	8.01
	3.13	3.51	3.82	4.23	4.64	5.02	5.73	5.73	4.15	4.50	5.00	5.47	5.93	6.28	6.28
10058	3.98	4.49	4.88	5.44	6.02	6.55	7.76	7.76	4.87	5.31	5.92	6.53	7.12	7.76	7.76
	2.86	3.21	3.48	3.86	4.21	4.56	5.37	5.37	3.77	4.11	4.55	4.99	5.39	5.89	5.89
10363	3.75	4.23	4.59	5.12	5.66	6.17	7.32	7.53	4.59	5.00	5.57	6.15	6.69	7.53	7.53
	2.61	2.93	3.18	3.53	3.85	4.17	4.91	5.02	3.45	3.75	4.15	4.55	4.93	5.51	5.51
10668	3.53	3.98	4.33	4.83	5.34	5.82	6.90	7.31	4.33	4.71	5.25	5.80	6.31	7.31	7.31
	2.39	2.68	2.91	3.22	3.53	3.82	4.49	4.72	3.16	3.44	3.80	4.17	4.52	5.19	5.19
10973	3.34	3.76	4.10	4.56	5.04	5.50	6.52	7.10	4.08	4.45	4.96	5.48	5.96	7.09	7.10
	2.18	2.46	2.67	2.96	3.23	3.51	4.13	4.46	2.90	3.15	3.50	3.83	4.14	4.87	4.87
11278	3.15	3.56	3.88	4.31	4.77	5.19	6.17	6.91	3.86	4.21	4.69	5.19	5.64	6.71	6.91
	2.01	2.26	2.46	2.72	2.99	3.23	3.79	4.23	2.67	2.90	3.22	3.53	3.82	4.49	4.59
11582	2.99	3.37	3.67	4.10	4.52	4.93	5.85	6.72	3.66	3.99	4.45	4.91	5.35	6.36	6.72
	1.86	2.08	2.27	2.51	2.75	2.97	3.50	4.01	2.46	2.68	2.97	3.25	3.51	4.14	4.36
11887	2.84	3.19	3.48	3.88	4.29	4.67	5.54	6.55	3.47	3.79	4.21	4.67	5.07	6.02	6.55
	1.72	1.92	2.10	2.32	2.53	2.75	3.23	3.80	2.27	2.48	2.74	3.00	3.25	3.82	4.13
12192	2.69	3.03	3.31	3.69	4.08	4.43	5.26	6.39	3.31	3.60	4.01	4.43	4.83	5.73	6.39
	1.59	1.78	1.94	2.15	2.34	2.55	3.00	3.60	2.11	2.29	2.53	2.78	3.02	3.54	3.92
12497	2.56	2.88	3.15	3.51	3.88	4.23	5.02	6.23	3.13	3.42	3.82	4.21	4.59	5.45	6.23
	1.47	1.66	1.80	1.99	2.18	2.36	2.78	3.42	1.95	2.13	2.36	2.58	2.80	3.28	3.73
12802	2.45	2.75	3.00	3.34	3.69	4.02	4.77	6.08	2.99	3.26	3.63	4.01	4.37	5.19	6.08
	1.37	1.54	1.67	1.85	2.02	2.20	2.58	3.26	1.82	1.98	2.18	2.39	2.59	3.06	3.56
13106	2.33	2.62	2.86	3.19	3.53	3.83	4.55	5.92	2.86	3.10	3.47	3.83	4.17	4.94	5.93
	1.28	1.43	1.56	1.72	1.89	2.04	2.40	3.10	1.69	1.83	2.04	2.23	2.42	2.84	3.38
13411	2.23	2.51	2.72	3.05	3.37	3.66	4.34	5.64	2.72	2.97	3.31	3.66	3.98	4.72	5.80
	1.19	1.34	1.45	1.60	1.76	1.91	2.24	2.90	1.57	1.72	1.91	2.08	2.26	2.65	3.23
13716	2.13	2.39	2.61	2.90	3.21	3.50	4.15	5.39	2.61	2.83	3.16	3.50	3.80	4.52	5.67
	1.10	1.25	1.35	1.50	1.64	1.78	2.10	2.69	1.47	1.60	1.78	1.94	2.11	2.48	3.09
14021	2.02	2.29	2.49	2.78	3.07	3.35	3.96	5.16	2.49	2.71	3.02	3.34	3.64	4.31	5.54
	1.03	1.16	1.26	1.41	1.54	1.66	1.97	2.53	1.38	1.50	1.66	1.82	1.97	2.32	2.96
14326	1.94	2.18	2.39	2.67	2.94	3.21	3.80	4.94	2.39	2.59	2.90	3.19	3.48	4.14	5.38
	0.97	1.09	1.19	1.31	1.44	1.56	1.83	2.37	1.29	1.40	1.56	1.70	1.85	2.17	2.80
14630	1.86	2.10	2.29	2.55	2.83	3.07	3.64	4.74	2.29	2.49	2.77	3.06	3.34	3.96	5.15
	0.91	1.02	1.12	1.24	1.35	1.47	1.72	2.23	1.21	1.31	1.45	1.60	1.73	2.04	2.62
14935									2.18	2.39	2.67	2.94	3.21	3.80	4.94
									1.13	1.24	1.37	1.50	1.63	1.91	2.46
15240									2.10	2.29	2.55	2.83	3.07	3.64	4.74
									1.06	1.16	1.29	1.41	1.53	1.80	2.32
15545									2.02	2.20	2.45	2.71	2.96	3.51	4.56
									1.00	1.09	1.21	1.32	1.44	1.69	2.18
15850									1.94	2.11	2.36	2.61	2.84	3.37	4.39
									0.94	1.03	1.15	1.25	1.35	1.60	2.07

ASD

METRIC LOAD TABLE FOR OPEN WEB STEEL JOISTS, K-SERIES
Based On A 345 MPa Maximum Yield Strength - Loads Shown In Kilonewtons Per Meter (kN/m)

Joist Designation	28K6	28K7	28K8	28K9	28K10	28K12	30K7	30K8	30K9	30K10	30K11	30K12
Depth (mm)	711	711	711	711	711	711	762	762	762	762	762	762
Approx. Wt. (kN/m)	0.13	0.13	0.14	0.15	0.17	0.21	0.14	0.15	0.15	0.17	0.19	0.22
Span (mm) ↓												
8230	8.02 8.02	8.02 8.02	8.02 8.02	8.02 8.02	8.02 8.02	8.02 8.02						
8534	7.99 7.89	8.02 7.92	8.02 7.92	8.02 7.92	8.02 7.92	8.02 7.92						
8839	7.45 7.09	8.02 7.61	8.02 7.61	8.02 7.61	8.02 7.61	8.02 7.61	8.02 8.02	8.02 8.02	8.02 8.02	8.02 8.02	8.02 8.02	8.02 8.02
9144	6.96 6.40	7.74 7.09	8.02 7.29	8.02 7.29	8.02 7.29	8.02 7.29	8.02 7.92	8.02 7.92	8.02 7.92	8.02 7.92	8.02 7.92	8.02 7.92
9449	6.50 5.79	7.25 6.42	8.02 7.00	8.02 7.00	8.02 7.00	8.02 7.00	7.79 7.41	8.02 7.58	8.02 7.58	8.02 7.58	8.02 7.58	8.02 7.58
9754	6.10 5.26	6.80 5.83	7.51 6.39	8.01 6.75	8.01 6.75	8.01 6.75	7.31 6.72	8.01 7.29	8.01 7.29	8.01 7.29	8.01 7.29	8.01 7.29
10058	5.73 4.80	6.39 5.31	7.06 5.82	7.69 6.30	7.76 6.34	7.76 6.34	6.87 6.12	7.58 6.71	7.76 6.82	7.76 6.82	7.76 6.82	7.76 6.82
10363	5.39 4.37	6.01 4.85	6.65 5.31	7.23 5.76	7.53 5.98	7.53 5.98	6.46 5.60	7.15 6.12	7.53 6.43	7.53 6.43	7.53 6.43	7.53 6.43
10668	5.09 4.01	5.67 4.45	6.27 4.85	6.82 5.26	7.31 5.67	7.31 5.67	6.10 5.12	6.74 5.60	7.31 6.05	7.31 6.05	7.31 6.05	7.31 6.05
10973	4.81 3.67	5.35 4.08	5.92 4.46	6.45 4.84	7.10 5.34	7.10 5.34	5.76 4.71	6.36 5.15	6.93 5.58	7.10 5.72	7.10 5.72	7.10 5.72
11278	4.55 3.38	5.07 3.75	5.60 4.11	6.10 4.45	6.91 5.02	6.91 5.02	5.44 4.33	6.02 4.74	6.55 5.13	6.91 5.45	6.91 5.45	6.91 5.45
11582	4.31 3.12	4.80 3.45	5.31 3.79	5.77 4.11	6.72 4.74	6.72 4.74	5.16 3.99	5.70 4.37	6.21 4.74	6.72 5.15	6.72 5.15	6.72 5.15
11887	4.08 2.88	4.56 3.19	5.04 3.50	5.48 3.79	6.52 4.46	6.55 4.49	4.90 3.69	5.41 4.04	5.89 4.37	6.55 4.85	6.55 4.85	6.55 4.85
12192	3.88 2.67	4.33 2.96	4.78 3.23	5.21 3.51	6.18 4.14	6.39 4.24	4.65 3.41	5.15 3.73	5.60 4.05	6.39 4.59	6.39 4.59	6.39 4.59
12497	3.69 2.48	4.13 2.75	4.55 3.00	4.96 3.26	5.89 3.83	6.23 4.04	4.42 3.16	4.88 3.47	5.32 3.76	6.23 4.37	6.23 4.37	6.23 4.37
12802	3.51 2.30	3.92 2.55	4.33 2.80	4.72 3.03	5.60 3.57	6.08 3.85	4.21 2.94	4.67 3.22	5.07 3.50	6.02 4.11	6.08 4.14	6.08 4.14
13106	3.35 2.14	3.75 2.37	4.14 2.61	4.50 2.83	5.35 3.32	5.93 3.67	4.02 2.74	4.45 3.00	4.84 3.25	5.74 3.83	5.93 3.94	5.93 3.94
13411	3.21 1.99	3.57 2.21	3.95 2.43	4.30 2.64	5.10 3.09	5.80 3.50	3.83 2.56	4.24 2.80	4.62 3.03	5.48 3.57	5.80 3.76	5.80 3.76
13716	3.06 1.86	3.41 2.07	3.77 2.27	4.11 2.46	4.87 2.88	5.67 3.34	3.66 2.39	4.05 2.61	4.42 2.84	5.23 3.34	5.67 3.59	5.67 3.59
14021	2.93 1.75	3.26 1.94	3.61 2.13	3.94 2.30	4.67 2.71	5.54 3.19	3.51 2.23	3.88 2.45	4.23 2.65	5.02 3.12	5.54 3.44	5.54 3.44
14326	2.80 1.63	3.12 1.82	3.45 1.98	3.76 2.15	4.46 2.53	5.42 3.06	3.35 2.10	3.72 2.29	4.04 2.49	4.80 2.93	5.42 3.29	5.42 3.29
14630	2.68 1.53	3.00 1.70	3.31 1.86	3.60 2.02	4.29 2.37	5.32 2.93	3.22 1.97	3.56 2.15	3.88 2.33	4.59 2.74	5.28 3.13	5.32 3.15
14935	2.58 1.44	2.87 1.60	3.18 1.75	3.45 1.89	4.11 2.23	5.21 2.81	3.09 1.85	3.41 2.02	3.72 2.18	4.42 2.58	5.06 2.94	5.21 3.02
15240	2.48 1.35	2.75 1.50	3.05 1.64	3.32 1.79	3.94 2.10	5.10 2.69	2.96 1.73	3.28 1.89	3.57 2.05	4.24 2.42	4.85 2.77	5.10 2.90
15545	2.37 1.28	2.65 1.41	2.93 1.54	3.19 1.67	3.79 1.98	4.93 2.55	2.84 1.63	3.15 1.79	3.42 1.94	4.07 2.29	4.67 2.61	5.00 2.80
15850	2.29 1.21	2.55 1.34	2.81 1.45	3.06 1.59	3.64 1.86	4.74 2.40	2.74 1.54	3.03 1.69	3.29 1.83	3.91 2.15	4.49 2.46	4.90 2.68
16154	2.20 1.13	2.45 1.26	2.71 1.38	2.96 1.50	3.50 1.76	4.56 2.27	2.64 1.45	2.91 1.59	3.18 1.73	3.76 2.04	4.31 2.32	4.81 2.58
16459	2.11 1.07	2.36 1.19	2.61 1.29	2.84 1.41	3.38 1.66	4.39 2.14	2.53 1.37	2.80 1.50	3.05 1.63	3.63 1.92	4.15 2.18	4.72 2.48
16764	2.04 1.02	2.27 1.12	2.52 1.24	2.74 1.34	3.25 1.57	4.23 2.02	2.45 1.29	2.69 1.43	2.94 1.54	3.50 1.82	4.01 2.07	4.55 2.34
17069	1.97 0.96	2.20 1.06	2.42 1.16	2.64 1.26	3.13 1.48	4.08 1.92	2.36 1.22	2.61 1.34	2.84 1.45	3.37 1.72	3.86 1.97	4.39 2.23
17374							2.27 1.16	2.52 1.28	2.74 1.38	3.25 1.63	3.73 1.86	4.23 2.11
17678							2.20 1.10	2.43 1.21	2.64 1.31	3.13 1.54	3.60 1.76	4.08 1.99
17983							2.13 1.05	2.34 1.15	2.55 1.25	3.03 1.47	3.48 1.67	3.95 1.89
18288							2.05 1.00	2.27 1.09	2.46 1.18	2.93 1.40	3.37 1.59	3.82 1.80

American National Standard SJI 100 - 2020

STANDARD LRFD LOAD TABLE

FOR KCS JOISTS

Based on a 50 ksi (345 MPa) Maximum Yield Strength
Adopted by the Steel Joist Institute May 1, 2000
Revised to May 18, 2010 – Effective December 31, 2010

The figures in the following table give the Moment Capacity (kip-in.)(N/m) and Shear Capacity (lbs)(kN). The maximum uniformly distributed load capacity in **LRFD** shall not exceed 825 plf (12.03 kN/M) and a single concentrated load cannot exceed the shear capacity. Sloped parallel-chord KCS Joists shall use the appropriate moment and shear capacity for the span as defined by the length along the slope.

The approximate KCS Joist weights per linear foot (kiloNewtons per meter) shown in this table do not include accessories.

The KCS Joist designation is not used to establish bridging requirements. The Bridging Table Section Numbers given in the KCS Standard Load Table indicate the equivalent K-Series joist of the same depth to be used for determination of the number of bridging rows, the size of horizontal bridging, and the need for erection stability bridging. While the need for erection stability bridging (diagonal bridging with bolted connections at the chords and intersections), can be determined from the **RED** shaded portion of the Standard Load Table, Open Web Steel Joists, K-Series, for convenience the KCS Load Table also includes a column for erection stability bridging. Where the span of the KCS Joist designation exceeds the length in ft. (mm) listed, the row of bridging nearest the joist midspan shall be erection stability bridging. Where “NA” is listed in the column, the KCS Joist designation does not require bolted diagonal erection bridging regardless of span.

For the proper handling of concentrated and/or varying loads, see Section 2.4 in the Code of Standard Practice for Steel Joists and Joist Girders.

LRFD

STANDARD LOAD TABLE FOR KCS OPEN WEB STEEL JOISTS Based on a 50 ksi Maximum Yield Strength							
JOIST DESIGNATION	DEPTH (in.)	MOMENT CAPACITY (k-in.)	SHEAR CAPACITY* (lbs)	APPROX. WEIGHT** (lbs/ft.)	GROSS MOMENT OF INERTIA ($in.^4$)	ERECTION STABILITY BRIDGING REQ'D (ft.)	BRIDGING TABLE SECTION NUMBER
10KCS1	10	258	3000	6.0	29	NA	1
10KCS2	10	337	3750	7.5	37	NA	1
10KCS3	10	444	4500	10.0	47	NA	1
12KCS1	12	313	3600	6.0	43	NA	3
12KCS2	12	411	4500	8.0	55	NA	5
12KCS3	12	543	5250	10.0	71	NA	5
14KCS1	14	370	4350	6.5	59	NA	4
14KCS2	14	486	5100	8.0	77	NA	6
14KCS3	14	642	5850	10.0	99	NA	6
16KCS2	16	523	6000	8.5	99	NA	6
16KCS3	16	705	7200	10.5	128	NA	9
16KCS4	16	1080	7950	14.5	192	NA	9
16KCS5	16	1401	8700	18.0	245	NA	9
18KCS2	18	592	7050	9.0	127	35-0	6
18KCS3	18	798	7800	11.0	164	NA	9
18KCS4	18	1225	8550	15.0	247	NA	10
18KCS5	18	1593	9300	18.5	316	NA	10
20KCS2	20	663	7800	9.5	159	36-0	6
20KCS3	20	892	9000	11.5	205	39-0	9
20KCS4	20	1371	11850	16.5	308	NA	10
20KCS5	20	1786	12600	20.0	396	NA	10
22KCS2	22	732	8850	10.0	194	36-0	6
22KCS3	22	987	9900	12.5	251	40-0	9
22KCS4	22	1518	11850	16.5	377	NA	11
22KCS5	22	1978	12900	20.5	485	NA	11
24KCS2	24	801	9450	10.0	232	39-0	6
24KCS3	24	1080	10800	12.5	301	44-0	9
24KCS4	24	1662	12600	16.5	453	NA	12
24KCS5	24	2172	13350	20.5	584	NA	12
26KCS2	26	870	9900	10.0	274	39-0	6
26KCS3	26	1174	11700	12.5	355	44-0	9
26KCS4	26	1809	12750	16.5	536	NA	12
26KCS5	26	2364	13800	20.5	691	NA	12
28KCS2	28	939	10350	10.5	320	40-0	6
28KCS3	28	1269	12000	12.5	414	45-0	9
28KCS4	28	1954	12750	16.5	626	53-0	12
28KCS5	28	2556	13800	20.5	808	53-0	12
30KCS3	30	1362	12000	13.0	478	45-0	9
30KCS4	30	2100	12750	16.5	722	54-0	12
30KCS5	30	2749	13800	21.0	934	54-0	12

*Maximum uniformly distributed load capacity is 825 plf and single concentrated load cannot exceed shear capacity
**Does not include accessories

LRFD

METRIC LOAD TABLE FOR KCS OPEN WEB STEEL JOISTS

Based on 345 MPa Maximum Yield Strength

JOIST DESIGNATION	DEPTH (mm)	MOMENT CAPACITY (kN-m)	SHEAR CAPACITY* (kN)	APPROX. WEIGHT** (kN/m)	GROSS MOMENT OF INERTIA (cm^4)	ERECTION STABILITY BRIDGING REQ'D (mm)	BRIDGING TABLE SECTION NUMBER
10KCS1	254	29.1	13.3	0.09	1200	NA	1
10KCS2	254	38.1	16.6	0.11	1540	NA	1
10KCS3	254	50.1	20.0	0.15	1950	NA	1
12KCS1	305	35.4	16.0	0.09	1780	NA	3
12KCS2	305	46.4	20.0	0.12	2280	NA	5
12KCS3	305	61.3	23.3	0.15	2950	NA	5
14KCS1	356	41.8	19.3	0.09	2450	NA	4
14KCS2	356	54.9	22.6	0.12	3200	NA	6
14KCS3	356	72.5	26.0	0.15	4120	NA	6
16KCS2	406	59.1	26.6	0.12	4120	NA	6
16KCS3	406	79.6	32.0	0.15	5320	NA	9
16KCS4	406	122.0	35.3	0.21	7990	NA	9
16KCS5	406	158.2	38.6	0.26	10190	NA	9
18KCS2	457	66.9	31.3	0.13	5280	10668	6
18KCS3	457	90.1	34.6	0.16	6820	NA	9
18KCS4	457	138.4	38.0	0.22	10280	NA	10
18KCS5	457	179.9	41.3	0.27	13150	NA	10
20KCS2	508	74.9	34.6	0.14	6610	10973	6
20KCS3	508	100.7	40.0	0.17	8530	11887	9
20KCS4	508	154.9	52.7	0.24	12810	NA	10
20KCS5	508	201.8	56.0	0.29	16480	NA	10
22KCS2	559	82.7	39.3	0.15	8070	10973	6
22KCS3	559	111.5	44.0	0.18	10440	12192	9
22KCS4	559	171.5	52.7	0.24	15690	NA	11
22KCS5	559	223.5	57.3	0.30	20180	NA	11
24KCS2	610	90.5	42.0	0.15	9650	11887	6
24KCS3	610	122.0	48.0	0.18	12520	13411	9
24KCS4	610	187.7	56.0	0.24	18850	NA	12
24KCS5	610	245.4	59.3	0.30	24300	NA	12
26KCS2	660	98.2	44.0	0.15	11400	11887	6
26KCS3	660	132.7	52.0	0.18	14770	13411	9
26KCS4	660	204.3	56.7	0.24	22310	NA	12
26KCS5	660	267.0	61.3	0.30	28760	NA	12
28KCS2	711	106.0	46.0	0.15	13310	12192	6
28KCS3	711	143.3	53.3	0.18	17230	13716	9
28KCS4	711	220.8	56.7	0.24	26050	16154	12
28KCS5	711	288.7	61.3	0.30	33630	16154	12
30KCS3	762	153.8	53.3	0.19	19890	13716	9
30KCS4	762	237.2	56.7	0.24	30050	16459	12
30KCS5	762	310.6	61.3	0.31	38870	16459	12

*Maximum uniformly distributed load capacity is 8.02 kN/m and single concentrated load cannot exceed shear capacity
**Does not include accessories

American National Standard SJI 100 - 2020

STANDARD ASD LOAD TABLE

FOR KCS JOISTS

Based on a 50 ksi (345 MPa) Maximum Yield Strength
Adopted by the Steel Joist Institute May 2, 1994
Revised to May 18, 2010 – Effective December 31, 2010

The figures in the following table give the Moment Capacity (kip-in.)(N/m) and Shear Capacity (lbs)(N). The maximum uniformly distributed load capacity in **ASD** shall not exceed 550 plf (8.02 kN/m) and a single concentrated load cannot exceed the shear capacity. Sloped parallel-chord KCS Joists shall use the appropriate moment and shear capacity for the span as defined by the length along the slope.

The approximate KCS Joist weights per linear foot shown in the table do not include accessories.

The KCS Joist designation is not used to establish bridging requirements. The Bridging Table Section Numbers given in the KCS Standard Load Table indicate the equivalent K-Series joist of the same depth to be used for determination of the number of bridging rows, the size of horizontal bridging, and the need for erection stability bridging. While the need for erection stability bridging (diagonal bridging with bolted connections at the chords and intersections), can be determined from the **RED** shaded portion of the Standard Load Table, Open Web Steel Joists, K-Series, for convenience the KCS Load Table also includes a column for erection stability bridging. Where the span of the KCS Joist designation exceeds the length in ft. (mm) listed, the row of bridging nearest the joist midspan shall be erection stability bridging. Where “NA” is listed in the column, the KCS Joist designation does not require bolted diagonal erection bridging regardless of span.

For the proper handling of concentrated and/or varying loads, see Section 2.4 in the Code of Standard Practice for Steel Joists and Joist Girders.

ASD

STANDARD LOAD TABLE FOR KCS OPEN WEB STEEL JOISTS

Based on a 50 ksi Maximum Yield Strength

JOIST DESIGNATION	DEPTH (in.)	MOMENT CAPACITY (k-in.)	SHEAR CAPACITY* (lbs)	APPROX. WEIGHT** (lbs/ft.)	GROSS MOMENT OF INERTIA ($in.^4$)	ERECTION STABILITY BRIDGING REQ'D (ft.)	BRIDGING TABLE SECTION NUMBER
10KCS1	10	172	2000	6.0	29	NA	1
10KCS2	10	225	2500	7.5	37	NA	1
10KCS3	10	296	3000	10.0	47	NA	1
12KCS1	12	209	2400	6.0	43	NA	3
12KCS2	12	274	3000	8.0	55	NA	5
12KCS3	12	362	3500	10.0	71	NA	5
14KCS1	14	247	2900	6.5	59	NA	4
14KCS2	14	324	3400	8.0	77	NA	6
14KCS3	14	428	3900	10.0	99	NA	6
16KCS2	16	349	4000	8.5	99	NA	6
16KCS3	16	470	4800	10.5	128	NA	9
16KCS4	16	720	5300	14.5	192	NA	9
16KCS5	16	934	5800	18.0	245	NA	9
18KCS2	18	395	4700	9.0	127	35-0	6
18KCS3	18	532	5200	11.0	164	NA	9
18KCS4	18	817	5700	15.0	247	NA	10
18KCS5	18	1062	6200	18.5	316	NA	10
20KCS2	20	442	5200	9.5	159	36-0	6
20KCS3	20	595	6000	11.5	205	39-0	9
20KCS4	20	914	7900	16.5	308	NA	10
20KCS5	20	1191	8400	20.0	396	NA	10
22KCS2	22	488	5900	10.0	194	36-0	6
22KCS3	22	658	6600	12.5	251	40-0	9
22KCS4	22	1012	7900	16.5	377	NA	11
22KCS5	22	1319	8600	20.5	485	NA	11
24KCS2	24	534	6300	10.0	232	39-0	6
24KCS3	24	720	7200	12.5	301	44-0	9
24KCS4	24	1108	8400	16.5	453	NA	12
24KCS5	24	1448	8900	20.5	584	NA	12
26KCS2	26	580	6600	10.0	274	39-0	6
26KCS3	26	783	7800	12.5	355	44-0	9
26KCS4	26	1206	8500	16.5	536	NA	12
26KCS5	26	1576	9200	20.5	691	NA	12
28KCS2	28	626	6900	10.5	320	40-0	6
28KCS3	28	846	8000	12.5	414	45-0	9
28KCS4	28	1303	8500	16.5	626	53-0	12
28KCS5	28	1704	9200	20.5	808	53-0	12
30KCS3	30	908	8000	13.0	478	45-0	9
30KCS4	30	1400	8500	16.5	722	54-0	12
30KCS5	30	1833	9200	21.0	934	54-0	12

*Maximum uniformly distributed load capacity is 550 plf and single concentrated load cannot exceed shear capacity
**Does not include accessories

ASD

METRIC LOAD TABLE FOR KCS OPEN WEB STEEL JOISTS Based on 345 MPa Maximum Yield Strength							
JOIST DESIGNATION	DEPTH (mm)	MOMENT CAPACITY (kN-m)	SHEAR CAPACITY* (kN)	APPROX. WEIGHT** (kN/m)	GROSS MOMENT OF INERTIA (cm^4)	ERECTION STABILITY BRIDGING REQ'D (mm)	BRIDGING TABLE SECTION NUMBER
10KCS1	254	19.4	8.8	0.09	1200	NA	1
10KCS2	254	25.4	11.1	0.11	1540	NA	1
10KCS3	254	33.4	13.3	0.15	1950	NA	1
12KCS1	305	23.6	10.6	0.09	1780	NA	3
12KCS2	305	31.0	13.3	0.12	2280	NA	5
12KCS3	305	40.9	15.5	0.15	2950	NA	5
14KCS1	356	27.9	12.8	0.09	2450	NA	4
14KCS2	356	36.6	15.1	0.12	3200	NA	6
14KCS3	356	48.4	17.3	0.15	4120	NA	6
16KCS2	406	39.4	17.7	0.12	4120	NA	6
16KCS3	406	53.1	21.3	0.15	5320	NA	9
16KCS4	406	81.3	23.5	0.21	7990	NA	9
16KCS5	406	105.5	25.7	0.26	10190	NA	9
18KCS2	457	44.6	20.9	0.13	5280	10668	6
18KCS3	457	60.1	23.1	0.16	6820	NA	9
18KCS4	457	92.3	25.3	0.22	10280	NA	10
18KCS5	457	120.0	27.5	0.27	13150	NA	10
20KCS2	508	49.9	23.1	0.14	6610	10973	6
20KCS3	508	67.2	26.6	0.17	8530	11887	9
20KCS4	508	103.3	35.1	0.24	12810	NA	10
20KCS5	508	134.6	37.3	0.29	16480	NA	10
22KCS2	559	55.1	26.2	0.15	8070	10973	6
22KCS3	559	74.3	29.3	0.18	10440	12192	9
22KCS4	559	114.3	35.1	0.24	15690	NA	11
22KCS5	559	149.0	38.2	0.30	20180	NA	11
24KCS2	610	60.3	28.0	0.15	9650	11887	6
24KCS3	610	81.3	32.0	0.18	12520	13411	9
24KCS4	610	125.2	37.3	0.24	18850	NA	12
24KCS5	610	163.6	39.5	0.30	24300	NA	12
26KCS2	660	65.5	29.3	0.15	11400	11887	6
26KCS3	660	88.5	34.6	0.18	14770	13411	9
26KCS4	660	136.3	37.8	0.24	22310	NA	12
26KCS5	660	178.1	40.9	0.30	28760	NA	12
28KCS2	711	70.7	30.6	0.15	13310	12192	6
28KCS3	711	95.6	35.5	0.18	17230	13716	9
28KCS4	711	147.2	37.8	0.24	26050	16154	12
28KCS5	711	192.5	40.9	0.30	33630	16154	12
30KCS3	762	102.6	35.5	0.19	19890	13716	9
30KCS4	762	158.2	37.8	0.24	30050	16459	12
30KCS5	762	207.1	40.9	0.31	38870	16459	12

*Maximum uniformly distributed load capacity is 8.02 kN/m and single concentrated load cannot exceed shear capacity
**Does not include accessories

American National Standard SJI 100 - 2020

STANDARD ASD LOAD TABLE
STANDARD LRFD LOAD TABLE
FOR TOP CHORD EXTENSIONS (S TYPE) and (R TYPE)

Based on a 50 ksi (345 MPa) Maximum Yield Strength
ASD Load Table adopted by the Steel Joist Institute November 15, 1989
LRFD Load Table adopted by the Steel Joist Institute May 1, 2000
Revised to May 18, 2010 – Effective December 31, 2010

Joist extensions are commonly furnished to support a variety of overhang conditions. Two types are pictured below. The first is the TOP CHORD EXTENSION or "S" TYPE, which has only the top chord angles extended. The second is the EXTENDED END or "R" TYPE in which the standard 2½", (64 mm) end bearing depth is maintained over the entire length of the extension. The "S" TYPE extension is so designated because of its Simple nature whereas the "R" TYPE involves Reinforcing the top chord angles. The Specifying Professional should be aware that an "S" TYPE is more economical and should be specified whenever possible.

The following load tables are for K-Series TOP CHORD EXTENSIONS and EXTENDED ENDS for **ASD** and **LRFD** methods of design. The tabulated values are the maximum allowable uniform load in pounds per linear foot (kiloNewton/meter). The "S" and "I" numbers shown in the load tables are the Elastic Section Modulus and Moment of Inertia of the extension (Section) number with which they are associated.

In cases where it is not possible to meet specific job requirements with a 2½" (64 mm) deep "R" type extension (refer to "S" and "I" values in the Extended End Load Table), the depth of the extension must be increased to provide greater load-carrying capacity.

The "S" and "R" extension numbers are intended to be associated with Standard K-Series Joist Sizes of matching Section Number. When possible, the extension number should be limited to no more than the Standard K-Series Joist Section Number, for optimum economy.

When TOP CHORD EXTENSIONS or EXTENDED ENDS are specified the bracing requirements must be considered by the specifying professional.

It should be noted that an "R" TYPE extension must be specified when building details dictate a 2½", (64 mm) depth at the end of the extension. In the absence of specific instructions. the joist manufacturer may provide either type.

TOP CHORD EXTENSION

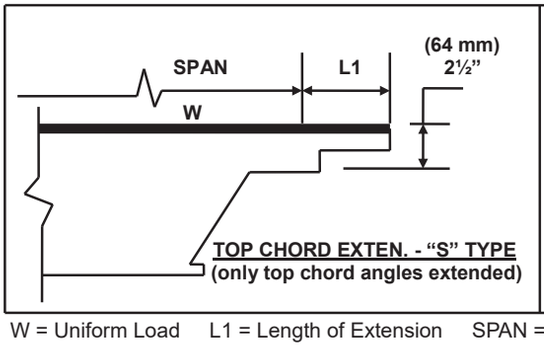

EXTENDED END

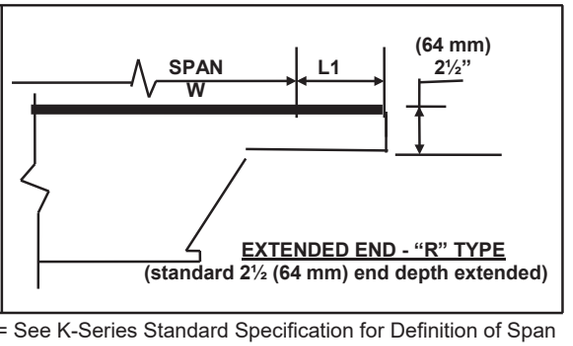

W = Uniform Load L1 = Length of Extension SPAN = See K-Series Standard Specification for Definition of Span

LRFD

TOP CHORD EXTENSION LOAD TABLE (R TYPE)
Based on a Yield Strength of 50 ksi
Pounds Per Linear Foot

TYPE	"S" ($in.^3$)	"I" ($in.^4$)	LENGTH (L1) 0'-6"	1'-0"	1'-6"	2'-0"	2'-6"	3'-0"	3'-6"	4'-0"	4'-6"	5'-0"	5'-6"	6'-0"
R1	0.895	1.119	825	825	825	825	825	669	498	385	307	250	208	175
R2	0.923	1.157	825	825	825	825	825	690	514	399	318	259	216	181
R3	1.039	1.299	825	825	825	825	825	777	579	448	358	292	243	205
R4	1.147	1.433	825	825	825	825	825	825	639	495	394	321	267	225
R5	1.249	1.561	825	825	825	825	825	825	696	538	429	349	291	246
R6	1.352	1.690	825	825	825	825	825	825	753	583	465	379	315	265
R7	1.422	1.802	825	825	825	825	825	825	792	613	489	399	331	279
R8	1.558	1.948	825	825	825	825	825	825	825	672	535	436	363	306
R9	1.673	2.091	825	825	825	825	825	825	825	721	576	469	390	328
R10	1.931	2.414	825	825	825	825	825	825	825	825	664	541	450	379
R11	2.183	2.729	825	825	825	825	825	825	825	825	751	612	508	430
R12	2.413	3.016	825	825	825	825	825	825	825	825	825	676	562	475

LRFD

TOP CHORD EXTENSION LOAD TABLE (S TYPE)
Based on a Yield Strength of 50 ksi
Pounds Per Linear Foot

TYPE	"S" ($in.^3$)	"I" ($in.^4$)	LENGTH (L1) 0'-6"	1'-0"	1'-6"	2'-0"	2'-6"	3'-0"	3'-6"	4'-0"	4'-6"			
S1	0.099	0.088	825	544	267	157								
S2	0.127	0.138	825	700	343	202								
S3	0.144	0.156	825	793	388	229								
S4	0.160	0.172	825	825	432	255	168							
S5	0.176	0.188	825	825	474	280	184							
S6	0.192	0.204	825	825	517	306	202							
S7	0.241	0.306	825	825	649	384	253	180						
S8	0.266	0.332	825	825	717	424	280	198						
S9	0.288	0.358	825	825	777	459	303	214	160					
S10	0.380	0.544	825	825	825	606	400	283	211	163				
S11	0.438	0.622	825	825	825	699	460	327	243	189	150			
S12	0.494	0.696	825	825	825	789	520	369	274	213	169			

ASD

TOP CHORD EXTENSION LOAD TABLE (R TYPE)
Based on a Yield Strength of 50 ksi
Pounds Per Linear Foot

TYPE	"S" ($in.^3$)	"I" ($in.^4$)	LENGTH (L1) 0'-6"	1'-0"	1'-6"	2'-0"	2'-6"	3'-0"	3'-6"	4'-0"	4'-6"	5'-0"	5'-6"	6'-0"
R1	0.895	1.119	550	550	550	550	550	446	332	257	205	167	139	117
R2	0.923	1.157	550	550	550	550	550	460	343	266	212	173	144	121
R3	1.039	1.299	550	550	550	550	550	518	386	299	239	195	162	137
R4	1.147	1.433	550	550	550	550	550	550	426	330	263	214	178	150
R5	1.249	1.561	550	550	550	550	550	550	464	359	286	233	194	164
R6	1.352	1.690	550	550	550	550	550	550	502	389	310	253	210	177
R7	1.422	1.802	550	550	550	550	550	550	528	409	326	266	221	186
R8	1.558	1.948	550	550	550	550	550	550	550	448	357	291	242	204
R9	1.673	2.091	550	550	550	550	550	550	550	481	384	313	260	219
R10	1.931	2.414	550	550	550	550	550	550	550	550	443	361	300	253
R11	2.183	2.729	550	550	550	550	550	550	550	550	501	408	339	287
R12	2.413	3.016	550	550	550	550	550	550	550	550	550	451	375	317

ASD

TOP CHORD EXTENSION LOAD TABLE (S TYPE)
Based on a Yield Strength of 50 ksi
Pounds Per Linear Foot

TYPE	"S" ($in.^3$)	"I" ($in.^4$)	LENGTH (L1) 0'-6"	1'-0"	1'-6"	2'-0"	2'-6"	3'-0"	3'-6"	4'-0"	4'-6"			
S1	0.099	0.088	550	363	178	105								
S2	0.127	0.138	550	467	229	135								
S3	0.144	0.156	550	529	259	153								
S4	0.160	0.172	550	550	288	170	112							
S5	0.176	0.188	550	550	316	187	123							
S6	0.192	0.204	550	550	345	204	135							
S7	0.241	0.306	550	550	433	256	169	120						
S8	0.266	0.332	550	550	478	283	187	132						
S9	0.288	0.358	550	550	518	306	202	143	107					
S10	0.380	0.544	550	550	550	404	267	189	141	109				
S11	0.438	0.622	550	550	550	466	307	218	162	126	100			
S12	0.494	0.696	550	550	550	526	347	246	183	142	113			

LRFD

TOP CHORD EXTENSION METRIC LOAD TABLE (R TYPE)
Based on a Yield Strength of 345 Mpa
Kilonewtons Per Meter (kN/m)

TYPE	"S" (mm^3)	"I" (mm^4)	LENGTH (L1)											
			152	305	457	610	762	914	1067	1219	1372	1524	1676	1829
R1	14666	465762	12.03	12.03	12.03	12.03	12.03	9.76	7.26	5.63	4.49	3.65	3.03	2.55
R2	15125	481579	12.03	12.03	12.03	12.03	12.03	10.06	7.50	5.82	4.64	3.78	3.15	2.64
R3	17026	540684	12.03	12.03	12.03	12.03	12.03	11.33	8.44	6.54	5.22	4.26	3.54	2.99
R4	18795	596459	12.03	12.03	12.03	12.03	12.03	12.03	9.32	7.22	5.74	4.68	3.89	3.28
R5	20467	649737	12.03	12.03	12.03	12.03	12.03	12.03	10.15	7.85	6.26	5.10	4.24	3.59
R6	22155	703431	12.03	12.03	12.03	12.03	12.03	12.03	10.98	8.51	6.78	5.54	4.59	3.87
R7	23302	750049	12.03	12.03	12.03	12.03	12.03	12.03	11.55	8.94	7.13	5.82	4.83	4.07
R8	25531	810818	12.03	12.03	12.03	12.03	12.03	12.03	12.03	9.80	7.82	6.36	5.29	4.46
R9	27415	870339	12.03	12.03	12.03	12.03	12.03	12.03	12.03	10.52	8.40	6.84	5.69	4.79
R10	31643	1004782	12.03	12.03	12.03	12.03	12.03	12.03	12.03	12.03	9.69	7.89	6.56	5.54
R11	35772	1135895	12.03	12.03	12.03	12.03	12.03	12.03	12.03	12.03	10.96	8.93	7.41	6.27
R12	39541	1255353	12.03	12.03	12.03	12.03	12.03	12.03	12.03	12.03	12.03	9.87	8.20	6.93

LRFD

TOP CHORD EXTENSION METRIC LOAD TABLE (S TYPE)
Based on a Yield Strength of 345 Mpa
Kilonewtons Per Meter (kN/m)

TYPE	"S" (mm^3)	"I" (mm^4)	LENGTH (L1)											
			152	305	457	610	762	914	1067	1219	1372			
S1	1622	36628	12.03	7.93	3.89	2.29								
S2	2081	57439	12.03	10.21	5.00	2.94								
S3	2359	64932	12.03	11.57	5.66	3.34								
S4	2621	71591	12.03	12.03	6.30	3.72	2.45							
S5	2884	78251	12.03	12.03	6.91	4.08	2.68							
S6	3146	84911	12.03	12.03	7.54	4.46	2.94							
S7	3949	127366	12.03	12.03	9.47	5.60	3.69	2.62						
S8	4358	138188	12.03	12.03	10.46	6.18	4.08	2.88						
S9	4719	149010	12.03	12.03	11.33	6.69	4.42	3.12	2.33					
S10	6227	226429	12.03	12.03	12.03	8.84	5.83	4.13	3.07	2.37				
S11	7177	258895	12.03	12.03	12.03	10.20	6.71	4.77	3.54	2.75	2.18			
S12	8095	289697	12.03	12.03	12.03	11.51	7.58	5.38	3.99	3.10	2.46			

ASD

TOP CHORD EXTENSION METRIC LOAD TABLE (R TYPE)
Based on a Yield Strength of 345 MPa
Kilonewtons Per Meter (kN/m)

TYPE	"S" (mm^3)	"I" (mm^4)	LENGTH (L1) 152	305	457	610	762	914	1067	1219	1372	1524	1676	1829
R1	14666	465762	8.02	8.02	8.02	8.02	8.02	6.50	4.84	3.75	2.99	2.43	2.02	1.70
R2	15125	481579	8.02	8.02	8.02	8.02	8.02	6.71	5.00	3.88	3.09	2.52	2.10	1.76
R3	17026	540684	8.02	8.02	8.02	8.02	8.02	7.55	5.63	4.36	3.48	2.84	2.36	1.98
R4	18796	596459	8.02	8.02	8.02	8.02	8.02	8.02	6.21	4.81	3.83	3.12	2.59	2.18
R5	20467	649737	8.02	8.02	8.02	8.02	8.02	8.02	6.77	5.23	4.17	3.40	2.83	2.39
R6	22155	703431	8.02	8.02	8.02	8.02	8.02	8.02	7.32	5.67	4.52	3.69	3.06	2.58
R7	23302	750049	8.02	8.02	8.02	8.02	8.02	8.02	7.70	5.96	4.75	3.88	3.22	2.71
R8	25531	810818	8.02	8.02	8.02	8.02	8.02	8.02	8.02	6.53	5.21	4.24	3.53	2.97
R9	27415	870339	8.02	8.02	8.02	8.02	8.02	8.02	8.02	7.01	5.60	4.56	3.79	3.19
R10	31643	1004782	8.02	8.02	8.02	8.02	8.02	8.02	8.02	8.02	6.46	5.26	4.37	3.69
R11	35773	1135895	8.02	8.02	8.02	8.02	8.02	8.02	8.02	8.02	7.31	5.95	4.94	4.18
R12	39542	1255353	8.02	8.02	8.02	8.02	8.02	8.02	8.02	8.02	8.02	6.58	5.47	4.62

ASD

TOP CHORD EXTENSION METRIC LOAD TABLE (S TYPE)
Based on a Yield Strength of 345 MPa
Kilonewtons Per Meter (kN/m)

TYPE	"S" (mm^3)	"I" (mm^4)	LENGTH (L1) 152	305	457	610	762	914	1067	1219	1372			
S1	1622	36628	8.02	5.29	2.59	1.53								
S2	2081	57439	8.02	6.81	3.34	1.97								
S3	2359	64932	8.02	7.72	3.77	2.23								
S4	2621	71591	8.02	8.02	4.20	2.48	1.63							
S5	2884	78251	8.02	8.02	4.61	2.72	1.79							
S6	3146	84911	8.02	8.02	5.03	2.97	1.97							
S7	3949	127366	8.02	8.02	6.31	3.73	2.46	1.75						
S8	4358	138188	8.02	8.02	6.97	4.13	2.72	1.92						
S9	4719	149010	8.02	8.02	7.55	4.46	2.94	2.08	1.56					
S10	6227	226429	8.02	8.02	8.02	5.89	3.89	2.75	2.05	1.59				
S11	7177	258895	8.02	8.02	8.02	6.80	4.48	3.18	2.36	1.83	1.45			
S12	8095	289697	8.02	8.02	8.02	7.67	5.06	3.59	2.67	2.07	1.64			

American National Standard SJI 100 - 2020

STANDARD ASD LOAD TABLE
STANDARD LRFD LOAD TABLE
FOR JOIST SUBSTITUTES AND OUTRIGGERS

Based on a 50 ksi (345 MPa) Maximum Yield Strength
LRFD Load Table adopted by the Steel Joist Institute May 1, 2001
Revised to May 18, 2010 – Effective December 31, 2010

JOIST SUBSTITUTES, SIMPLE SPAN LOAD TABLES

Joist substitutes are 2.5 inch (64 mm) deep sections intended for use in very short spans (less than 10 feet (3.05 m)) where Open Web Steel Joists are impractical. They are commonly specified to span over hallways and short spans in skewed bays.

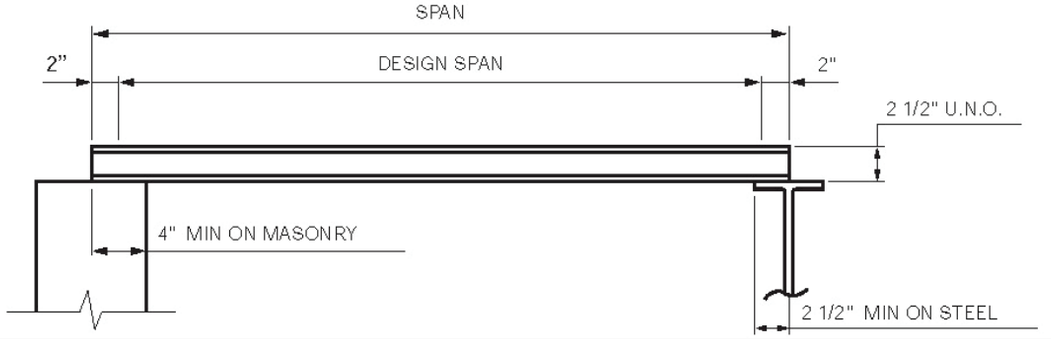

Joist substitutes are solid members that can be manufactured from material conforming to the Steel Joist Institute Standard Specifications and can be made of hot rolled or cold-formed channels or HSS as shown below.

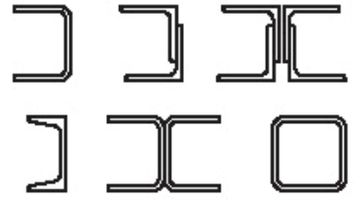

Full lateral support to the compressive flange is provided by attachments to the deck. Caution must be exercised during erection since joist substitutes exhibit some degree of instability. After erection and before loads of any description are placed on the joist substitutes, the ends must be attached to the supports per the SJI Standard Specification for Open Web Steel Joists, K-Series and the deck installed and attached to the top flange.

LOAD TABLES
ASD+LRFD - JOIST SUBSTITUTES

The Simple Span Joist Substitutes Load Tables list uniform loads based on **LRFD** and **ASD** methods of design and are shown in U.S. Customary Units.

The **BLACK** figures in the **LRFD** Load Table gives the TOTAL safe factored uniformly distributed load-carrying capacity in pounds per linear foot, of 2.5 Inch Joist Substitutes. The **BLACK** figures in the **ASD** Load Table gives the TOTAL safe unfactored uniformly distributed load-carrying capacity in pounds per linear foot, of 2.5 Inch Joist Substitutes.

The **RED** figures in the Load Table represent the unfactored, uniform load, in pounds per linear foot, which will produce an approximate joist substitute deflection of 1/360 of the span. This load can be linearly prorated to obtain the unfactored, uniform load for supplementary deflection criteria (e.g. an unfactored uniform load which will produce a joist substitute deflection of 1/240 of the span may be obtained by multiplying the **RED** figure by 360/240). In no case shall the prorated, unfactored load exceed the unfactored TOTAL load-carrying capacity of the joist substitute as given in the **ASD** Load Table for 2.5 Inch Simple Span Joist Substitutes, **K**-Series.

Minimum section properties shall be provided for the particular 2.5K type specified even at shorter spans where the developed load capacity may exceed 550 plf (**ASD**) or 825 plf (**LRFD**).

2.5K JOIST SUBSTITUTES PROPERTIES			
2.5K TYPE	**2.5K1**	**2.5K2**	**2.5K3**
S in^3	0.62	0.86	1.20
I in^4	0.77	1.07	1.50
Approx. Wt. (lbs/ft)	3.0	4.2	6.4

LRFD

LOAD TABLES FOR 2.5 INCH SIMPLE SPAN JOIST SUBSTITUTES, K-SERIES			
Based on a Yield Strength of 50 ksi			
Designation	**2.5K1**	**2.5K2**	**2.5K3**
Span (ft-in)	**Pounds per Linear Foot**		
4'-0"	825	825	825
	550	550	550
5'-0"	825	825	825
	326	452	550
6'-0"	579	803	825
	182	253	354
7'-0"	419	581	810
	112	155	218
8'-0"	316	439	612
	73	102	143
9'-0"	0	343	479
	0	71	99
10'-0"	0	0	385
	0	0	71

ASD

LOAD TABLES FOR 2.5 INCH SIMPLE SPAN JOIST SUBSTITUTES, K-SERIES			
Based on a Yield Strength of 50 ksi			
Designation	**2.5K1**	**2.5K2**	**2.5K3**
Span (ft-in)	**Pounds per Linear Foot**		
4'-0"	550	550	550
	550	550	550
5'-0"	550	550	550
	326	452	550
6'-0"	386	536	550
	182	253	354
7'-0"	279	387	540
	112	155	218
8'-0"	211	293	408
	73	102	143
9'-0"	0	229	320
	0	71	99
10'-0"	0	0	257
	0	0	71

The Simple Span Joist Substitutes Load Tables list uniform loads based on **LRFD** and **ASD** methods of design and are shown in S.I. Metric Units.

The **BLACK** figures in the **LRFD** Load Table gives the TOTAL safe factored uniformly distributed load-carrying capacity in kiloNewtons per meter, of 64 mm Joist Substitutes. The **BLACK** figures in the **ASD** Load Table gives the TOTAL safe unfactored uniformly distributed load-carrying capacity in kiloNewtons per meter, of 64 mm Joist Substitutes.

The **RED** figures in the Load Table represent the unfactored, uniform load, in kiloNewtons per meter, which will produce an approximate joist substitute deflection of 1/360 of the span. This load can be linearly prorated to obtain the unfactored, uniform load for supplementary deflection criteria (i.e. an unfactored uniform load which will produce a joist substitute deflection of 1/240 of the span may be obtained by multiplying the **RED** figure by 360/240). In no case shall the prorated, unfactored load exceed the unfactored TOTAL load-carrying capacity of the joist substitute as given in the **ASD** Load Table for 64 mm Simple Span Joist Substitutes, K-Series.

Minimum section properties shall be provided for the particular 2.5K type specified even at shorter spans where the developed load capacity may exceed 8.02 kN/m (**ASD**) or 12.03 kN/m (**LRFD**).

2.5K JOIST SUBSTITUTES PROPERTIES			
2.5K TYPE	**2.5K1**	**2.5K2**	**2.5K3**
S mm^3	10160	14093	19664
I mm^4	320498	445368	624347
Approx. Wt. (kN/m)	0.44	0.61	0.93

LRFD

LOAD TABLES FOR 64 MM SIMPLE SPAN JOIST SUBSTITUTES, K-SERIES			
Based on a Yield Strength of 345 Mpa			
Designation	**2.5K1**	**2.5K2**	**2.5K3**
Span (mm)	**KiloNewtons per Meter (kN/m)**		
1219	12.03	12.03	12.03
	8.02	8.02	8.02
1524	12.03	12.03	12.03
	4.75	6.60	8.02
1829	8.45	11.72	12.03
	2.65	3.68	5.16
2134	6.11	8.46	11.82
	1.62	2.26	3.17
2438	4.61	6.41	8.93
	1.07	1.48	2.08
2743	0.00	5.01	6.99
	0.00	1.03	1.44
3048	0.00	0.00	5.61
	0.00	0.00	1.04

ASD

LOAD TABLES FOR 64 MM SIMPLE SPAN JOIST SUBSTITUTES, K-SERIES			
Based on a Yield Strength of 345 Mpa			
Designation	**2.5K1**	**2.5K2**	**2.5K3**
Span (mm)	**KiloNewtons per Meter (kN/m)**		
1219	8.02	8.02	8.02
	8.02	8.02	8.02
1524	8.02	8.02	8.02
	4.75	6.60	8.02
1829	5.63	7.81	8.02
	2.65	3.68	5.16
2134	4.07	5.64	7.88
	1.62	2.26	3.17
2438	3.07	4.27	5.95
	1.07	1.48	2.08
2743	0.00	3.34	4.66
	0.00	1.03	1.44
3048	0.00	0.00	3.75
	0.00	0.00	1.04

JOIST SUBSTITUTES, OUTRIGGERS LOAD TABLES

Joist substitutes may be used in an outrigger condition where the member is overhanging one support as illustrated below where a portion is the back span and the remainder is the cantilever span or outrigger. Joist substitutes used in this configuration are 2.5 inch (64 mm) deep sections.

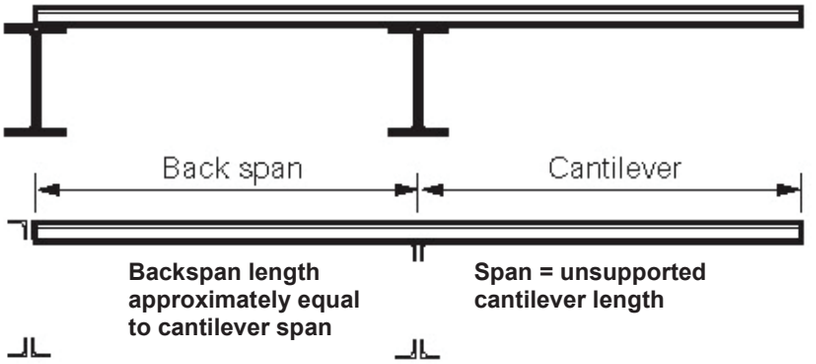

The Joist Outriggers Load Tables list uniform loads based on **LRFD** and **ASD** methods of design and shown in U.S. Customary Units

The **BLACK** figures in the **LRFD** Load Table gives the TOTAL safe factored uniformly distributed load-carrying capacity in pounds per linear foot, of 2.5 Inch Joist Outriggers. The **BLACK** figures in the **ASD** Load Table gives the TOTAL safe uniformly distributed load-carrying capacity in pounds per linear foot, of 2.5 Inch Joist Outriggers.
Serviceability requirements must be checked by the specifying professional. When calculating the actual live load deflection at the end of the cantilever it is necessary to consider the length of the back span.
Minimum section properties shall be provided for the particular 2.5K type specified even at shorter spans where the developed load capacity may exceed 550 plf (**ASD**) or 825 plf (**LRFD**).

LRFD

LOAD TABLES FOR 2.5 INCH JOIST OUTRIGGERS, K-SERIES									
OUTRIGGER TYPE	TOTAL ALLOWABLE LOAD FOR UNSUPPORTED CANTILEVER, PLF								
	SPAN (ft-in)								
	2'-0"	2'-6"	3'-0"	3'-6"	4'-0"	4'-6"	5'-0"	5'-6"	6'-0"
2.5K1	825	744	517	380	291	230	186	154	129
2.5K2	825	825	717	527	403	319	258	213	179
2.5K3	825	825	825	735	563	444	360	298	250

ASD

LOAD TABLES FOR 2.5 INCH JOIST OUTRIGGERS, K-SERIES									
OUTRIGGER TYPE	TOTAL ALLOWABLE LOAD FOR UNSUPPORTED CANTILEVER, PLF								
	SPAN (ft-in)								
	2'-0"	2'-6"	3'-0"	3'-6"	4'-0"	4'-6"	5'-0"	5'-6"	6'-0"
2.5K1	550	496	344	253	194	153	124	102	86
2.5K2	550	550	478	351	269	212	172	142	119
2.5K3	550	550	550	490	375	296	240	198	167

The Joist Outriggers Load Tables list uniform loads based on **LRFD** and **ASD** methods of design and are shown in S.I. Metric Units.

The **BLACK** figures in the **LRFD** Load Table gives the TOTAL safe factored uniformly distributed load-carrying capacity in kiloNewtons per meter, of 64 mm Joist Outriggers. The **BLACK** figures in the **ASD** Load Table gives the TOTAL safe uniformly distributed load-carrying capacity in kiloNewtons per meter, of 64 mm Joist Outriggers.
Serviceability requirements must be checked by the specifying professional. When calculating the actual live load deflection at the end of the cantilever it is necessary to consider the length of the back span.
Minimum section properties shall be provided for the particular 2.5K type specified even at shorter spans where the developed load capacity may exceed 8.02 kN/m (**ASD**) or 12.03 kN/m (**LRFD**).

LRFD

LOAD TABLES FOR 64 MM JOIST OUTRIGGERS, K-SERIES									
OUTRIGGER TYPE	TOTAL ALLOWABLE LOAD FOR UNSUPPORTED CANTILEVER, kN/m								
	SPAN (mm)								
	610	762	914	167	1219	1372	1524	1676	1229
2.5K1	12.03	10.85	7.53	5.54	4.23	3.35	2.70	2.24	1.88
2.5K2	12.03	12.03	10.46	7.68	5.88	4.64	3.77	3.11	2.61
2.5K3	12.03	12.03	12.03	10.71	8.21	6.48	5.25	4.34	3.65

ASD

LOAD TABLES FOR 64 MM JOIST OUTRIGGERS, K-SERIES									
OUTRIGGER TYPE	TOTAL ALLOWABLE LOAD FOR UNSUPPORTED CANTILEVER, kN/m								
	SPAN (mm)								
	610	762	914	167	1219	1372	1524	1676	1229
2.5K1	8.02	7.23	5.02	3.69	2.82	2.23	1.80	1.49	1.25
2.5K2	8.02	8.02	6.97	5.12	3.92	3.09	2.51	2.07	1.74
2.5K3	8.02	8.02	8.02	7.14	5.47	4.32	3.50	2.89	2.43

American National Standard SJI 100 - 2020

STANDARD LRFD LOAD TABLE

LONGSPAN STEEL JOISTS, LH-SERIES

Based on a 50 ksi (345 MPa) Maximum Yield Strength
Adopted by the Steel Joist Institute May 1, 2000
Revised to April 27, 2020 – Effective July 1, 2020

The **BLACK** figures in the Load Table give the TOTAL safe factored uniformly distributed load-carrying capacities, in pounds per linear foot (kiloNewtons per meter), of **LRFD** LH-Series Steel Joists.

The approximate joist weights, in pounds per linear foot (kiloNewtons per meter), given in the Load Table may be added to the other building weights to determine the unfactored DEAD load. In all cases the factored DEAD load, including the joist self-weight, must be deducted from the TOTAL load to determine the factored LIVE load. The approximate joist weights do not include accessories.

The **RED** figures in the Load Table represent the unfactored, uniform load, in pounds per linear foot (kiloNewtons per meter), which will produce an approximate joist deflection of 1/360 of the span. This load can be linearly prorated to obtain the unfactored, uniform load for supplementary deflection criteria (i.e. an unfactored uniform load which will produce a joist deflection of 1/240 of the span may be obtained by multiplying the **RED** figures by 360/240). In no case shall the prorated, unfactored load exceed the unfactored TOTAL load-carrying capacity of the joist as given in the Standard **ASD** Load Table for Longspan Steel Joists, LH-Series.

User Note: For floor joists, the RED figures may control the joist selection, and for longer spans consideration shall be given to the effects of camber on slab thickness. If a deeper joist designation cannot be used, CJ-Series composite joists may also be considered to take advantage of increased stiffness available due to composite action.

The Load Table applies to joists with either parallel chords or pitched top chords. Joists can have a top chord pitch up to 1/2 inch per foot (42 mm per meter). If the pitch exceeds this limit, the Load Table does not apply. When top chords are pitched, the load-carrying capacities are determined by the nominal depth of the joists at the center of the span. Sloped parallel-chord joists shall use span as defined by the length along the slope.

Where the joist span is in the **RED SHADED** area of the Load Table, the row of bridging nearest the mid span shall be diagonal bridging with bolted connections at chords and intersections. Hoisting cables shall not be released until this row of bolted diagonal bridging is completely installed. The **RED SHADED** area extends up through 60'–0" (18288 mm).

Where the joist span is in the **BLUE SHADED** area of the Load Table, all rows of bridging shall be diagonal bridging with bolted connections at chords and intersections. Hoisting cables shall not be released until the two rows of bridging nearest the third points are completely installed. The **BLUE SHADED** area starts after 60'–0" (18288 mm) and extends up through 100'–0" (30175 mm).

The approximate gross moment of inertia (not adjusted for shear deformation) of a standard joist listed in the Load Table may be determined as follows:

$I_j = 26.767(W)(L^3)(10^{-6})$ in^4 or $2.6953(W)(L^3)(10^{-5})$ mm^4, where W= **RED** figure in the Load Table, and
L = (span – 0.33) in feet or (span – 102) in millimeters

Loads for span increments not explicitly given in the Load Table may be determined using linear interpolation between the load values given in adjacent span rows. For spans shorter than the first span listed in the Load Table, the capacity shall be equal to that of the shortest listed span.

LRFD

STANDARD LOAD TABLE/OPEN WEB STEEL JOISTS, LH-SERIES
Based on a 50 ksi Maximum Yield Strength - Loads Shown In Pounds Per Linear Foot (plf)

Joist Designation	18LH02	18LH03	18LH04	18LH05	18LH06	18LH07	18LH08	18LH09	18LH10	18LH11	18LH12	18LH13	18LH14	18LH15	18LH16	18LH17	18LH18	18LH19	18LH20
Depth (in.)	18	18	18	18	18	18	18	18	18	18	18	18	18	18	18	18	18	18	18
Approx. Wt. (lbs./ft.)	10	11	12	14	15	17	19	21	23	25	28	33	36	39	44	50	57	62	83
Span (ft.) ↓																			
18	1207 805	1344 896	1558 1039	1762 1175	2157 1438	2293 1529	2592 1728	2983 1889	3346 2231	3733 2489	4126 2751								
19	1122 748	1249 833	1449 966	1639 1093	1993 1329	2121 1414	2397 1500	2746 1601	3081 2054	3436 2291	3799 2533								
20	1045 696	1164 774	1348 896	1527 1009	1846 1169	1965 1229	2220 1283	2532 1369	2842 1816	3171 2005	3505 2226	4207 2576							
21	973 600	1084 667	1257 772	1423 870	1714 1008	1824 1059	2059 1105	2343 1180	2628 1565	2932 1728	3241 1918	3880 2220	4237 2413						
22	909 520	1012 579	1174 670	1329 755	1594 874	1695 919	1915 959	2172 1024	2436 1358	2718 1500	3004 1664	3586 1926	3918 2094	4243 2276					
23	850 454	946 505	1098 585	1243 659	1485 764	1579 803	1783 838	2017 894	2262 1186	2524 1310	2790 1454	3324 1683	3630 1829	3933 1987					
24	796 399	886 444	1027 514	1164 579	1386 671	1473 705	1665 736	1875 786	2104 1042	2349 1151	2598 1277	3088 1478	3372 1607	3654 1746	4216 1922				
25	745 353	831 392	964 454	1092 511	1294 593	1377 623	1555 650	1750 694	1963 920	2191 1016	2422 1128	2874 1306	3139 1419	3402 1542	3880 1697	4425 1929			
26	702 313	781 348	906 403	1026 454	1213 526	1260 553	1314 577	1404 616	1834 817	2047 902	2263 1001	2682 1159	2929 1260	3172 1369	3585 1506	4087 1712			
27	663 284	739 317	856 367	972 414	1123 469	1213 513	1264 534	1351 571	1717 728	1917 804	2119 893	2506 1033	2737 1123	2967 1220	3321 1343	3786 1526	4374 1739		
28	627 259	700 289	802 329	921 378	1044 419	1170 476	1218 496	1302 527	1611 652	1797 720	1987 799	2347 925	2565 1006	2778 1093	3085 1203	3517 1367	4063 1557		
29	586 234	657 262	750 296	871 345	972 377	1089 428	1176 462	1257 491	1513 586	1689 647	1867 718	2203 832	2406 904	2607 982	2874 1081	3276 1229	3784 1400	4216 1538	
30	550 212	613 236	703 266	814 311	907 340	1017 386	1137 427	1215 458	1423 529	1588 584	1756 648	2070 750	2262 816	2451 886	2683 975	3058 1108	3534 1263	3936 1387	
31	517 193	573 213	660 242	762 282	849 307	952 349	1075 387	1174 418	1341 479	1494 529	1656 587	1950 679	2130 738	2307 802	2511 883	2863 1003	3307 1143	3684 1256	
32	486 175	538 194	619 219	714 256	796 280	892 317	1020 351	1138 380	1266 435	1401 480	1563 533	1839 617	2004 671	2176 729	2355 802	2685 911	3102 1038	3454 1141	4293 1402
33	459 160	505 177	582 200	672 233	748 254	838 288	961 320	1069 346	1197 396	1317 437	1470 485	1735 562	1882 611	2055 664	2212 731	2523 830	2914 946	3246 1039	4033 1277
34	433 147	475 161	547 182	631 212	705 232	789 264	906 292	1006 316	1131 362	1239 399	1384 443	1633 513	1773 558	1936 606	2083 667	2376 758	2743 864	3057 949	3798 1167
35	409 135	448 148	516 167	595 195	664 212	744 241	856 267	949 289	1066 331	1168 366	1305 406	1540 470	1671 511	1825 555	1965 611	2241 695	2587 791	2883 869	3582 1068
36	388 124	424 136	487 153	562 179	627 195	703 222	810 246	897 266	1008 304	1104 336	1233 373	1455 432	1579 469	1725 510	1855 561	2116 638	2445 727	2724 798	3384 981

LRFD

STANDARD LOAD TABLE/OPEN WEB STEEL JOISTS, LH-SERIES
Based on a 50 ksi Maximum Yield Strength - Loads Shown In Pounds Per Linear Foot (plf)

Joist Designation	20LH02	20LH03	20LH04	20LH05	20LH06	20LH07	20LH08	20LH09	20LH10	20LH11	20LH12	20LH13	20LH14	20LH15	20LH16	20LH17	20LH18	20LH19	20LH20
Depth (in.)	20	20	20	20	20	20	20	20	20	20	20	20	20	20	20	20	20	20	20
Approx. Wt. (lbs./ft.)	10	11	12	14	15	17	19	21	23	25	28	34	37	40	45	55	61	69	87
Span (ft.) ▼																			
20	1068	1240	1365	1590	1839	2140	2325	2656	2868	3466	3832								
	680	749	910	1020	1226	1427	1487	1620	1747	2311	2555								
21	1005	1147	1276	1485	1719	1990	2163	2461	2658	3211	3550	4270							
	586	646	820	879	1146	1239	1282	1396	1506	2141	2367	2798							
22	940	1072	1194	1390	1606	1854	2014	2286	2467	2982	3297	3954	4318						
	509	560	712	763	1007	1076	1112	1212	1307	1885	2093	2428	2640						
23	880	1005	1119	1297	1507	1731	1881	2127	2295	2775	3067	3670	4008	4342					
	444	489	621	666	880	939	971	1058	1141	1647	1828	2121	2306	2507					
24	826	943	1050	1216	1413	1618	1758	1983	2139	2586	2859	3414	3729	4039					
	390	430	546	585	773	825	853	930	1003	1447	1606	1863	2026	2202					
25	775	885	987	1134	1329	1516	1645	1851	1998	2415	2670	3181	3475	3765	4371				
	345	380	482	517	683	729	754	821	886	1278	1418	1646	1789	1945	2143				
26	663	703	861	924	1233	1317	1362	1485	1602	2259	2497	2971	3246	3516	4036				
	306	337	428	459	606	647	669	729	786	1134	1259	1461	1588	1726	1902				
27	655	694	849	913	1186	1267	1309	1429	1542	2116	2341	2779	3037	3291	3739	4269			
	303	333	406	437	561	599	619	675	724	1011	1123	1302	1416	1539	1696	1930			
28	646	687	837	903	1144	1221	1263	1377	1486	1987	2197	2605	2847	3084	3474	3966			
	298	317	386	416	521	556	575	626	673	905	1005	1166	1268	1378	1519	1728			
29	615	678	792	892	1084	1179	1219	1329	1434	1869	2067	2448	2673	2896	3235	3694	4267		
	274	302	352	395	477	518	536	581	626	814	904	1048	1140	1239	1365	1554	1771		
30	582	651	744	856	1018	1140	1177	1284	1386	1759	1947	2302	2515	2725	3021	3448	3985	4447	
	250	280	320	366	427	484	500	542	585	734	815	946	1028	1118	1232	1402	1598	1759	
31	547	621	700	816	952	1066	1140	1242	1341	1660	1836	2169	2370	2568	2827	3228	3729	4162	
	228	258	291	337	386	438	468	507	545	665	738	856	931	1012	1115	1269	1447	1592	
32	516	592	660	769	894	1000	1083	1203	1297	1567	1734	2046	2236	2422	2652	3027	3498	3903	
	208	238	265	308	351	398	428	475	510	604	670	778	846	919	1013	1152	1314	1446	
33	487	558	624	726	840	940	1030	1167	1258	1479	1641	1933	2113	2289	2491	2844	3286	3669	
	190	218	243	281	320	362	395	437	479	550	610	708	770	837	922	1050	1197	1317	
34	460	528	589	687	790	885	981	1132	1221	1392	1554	1830	1993	2166	2346	2677	3094	3453	4300
	174	200	223	258	292	331	365	399	448	502	558	647	704	765	843	959	1093	1203	1483
35	436	499	558	651	745	834	931	1068	1186	1312	1465	1732	1881	2053	2212	2526	2919	3256	4056
	160	184	205	238	267	303	336	366	411	460	511	593	644	700	772	878	1001	1102	1358
36	412	474	529	616	703	789	882	1009	1122	1240	1384	1636	1776	1941	2091	2386	2757	3076	3831
	147	169	189	219	246	278	309	336	377	422	469	544	592	643	709	806	919	1012	1247
37	393	448	502	585	666	745	837	954	1060	1173	1309	1549	1681	1836	1978	2257	2608	2911	3625
	136	156	174	202	226	256	285	309	346	389	432	501	545	592	652	742	846	931	1148
38	373	424	477	556	631	706	795	904	1005	1111	1242	1468	1593	1740	1873	2139	2472	2758	3435
	126	143	161	187	209	236	262	285	320	359	398	462	502	546	602	685	781	859	1059
39	355	403	454	529	598	670	754	858	954	1054	1177	1393	1512	1651	1779	2029	2346	2617	3259
	117	133	149	173	192	218	242	264	296	331	368	427	464	505	556	633	722	794	979
40	337	382	433	504	568	637	718	816	906	1002	1119	1323	1435	1569	1690	1929	2229	2487	3097
	108	123	139	161	178	202	225	244	274	307	341	395	430	467	515	586	668	735	906

LRFD

STANDARD LOAD TABLE/OPEN WEB STEEL JOISTS, LH-SERIES
Based on a 50 ksi Maximum Yield Strength - Loads Shown In Pounds Per Linear Foot (plf)

Joist Designation	24LH03	24LH04	24LH05	24LH06	24LH07	24LH08	24LH09	24LH10	24LH11	24LH12	24LH13	24LH14	24LH15	24LH16	24LH17	24LH18	24LH19	24LH20	24LH21
Depth (in.)	24	24	24	24	24	24	24	24	24	24	24	24	24	24	24	24	24	24	24
Approx. Wt. (lbs./ft.)	11	12	13	16	17	18	21	23	25	27	32	35	38	42	49	57	62	79	88
Span (ft.) ↓																			
24	996	1084	1240	1561	1821	1930	2491	2676	2922	3352	4032	4404							
	664	723	827	1041	1214	1287	1618	1716	1796	2235	2688	2936							
25	939	1021	1168	1471	1710	1812	2332	2505	2736	3139	3766	4114	4458						
	598	681	779	981	1140	1208	1429	1515	1587	2093	2445	2660	2893						
26	885	963	1102	1387	1608	1704	2187	2347	2565	2943	3525	3850	4173						
	530	642	695	925	1020	1083	1268	1345	1408	1864	2171	2361	2568						
27	835	909	1041	1311	1513	1603	2053	2203	2410	2764	3304	3610	3912						
	473	580	620	827	910	966	1131	1199	1256	1662	1935	2105	2290						
28	790	859	984	1240	1422	1512	1932	2073	2266	2601	3103	3390	3673	4252					
	423	519	555	741	814	865	1013	1074	1124	1488	1733	1885	2050	2263					
29	747	813	931	1173	1342	1426	1824	1953	2134	2449	2919	3189	3456	3961					
	381	467	499	666	732	778	910	965	1011	1338	1558	1695	1843	2035					
30	708	771	882	1111	1272	1348	1716	1842	2011	2310	2749	3003	3255	3699	4228				
	343	421	450	601	661	702	821	871	912	1207	1406	1529	1663	1836	2094				
31	672	730	832	1054	1200	1275	1626	1740	1896	2182	2593	2833	3070	3462	3957				
	311	381	408	544	598	635	744	789	826	1093	1272	1384	1505	1662	1895				
32	637	693	781	1000	1122	1209	1530	1608	1749	2064	2449	2677	2901	3246	3711	4290			
	282	346	370	494	543	577	675	716	750	993	1156	1257	1367	1509	1721	1964			
33	606	660	738	952	1059	1146	1432	1492	1581	1956	2317	2533	2745	3051	3487	4032			
	257	315	337	450	495	525	615	652	683	904	1053	1145	1245	1375	1568	1790			
34	513	628	673	906	997	1060	1248	1323	1390	1854	2196	2400	2601	2872	3283	3795	4248		
	235	288	308	411	452	480	562	596	624	826	962	1046	1138	1256	1432	1635	1804		
35	508	597	669	868	957	1015	1212	1284	1350	1761	2083	2275	2466	2709	3096	3579	4006		
	226	265	297	382	421	447	530	559	588	756	881	958	1042	1150	1312	1497	1653		
36	504	568	660	832	919	973	1177	1248	1312	1672	1978	2161	2343	2559	2925	3382	3784		
	218	246	285	356	393	416	501	528	555	695	809	880	957	1056	1205	1375	1518		
37	484	540	628	795	882	933	1146	1213	1276	1591	1881	2055	2227	2421	2767	3199	3580	4473	
	204	227	264	331	367	388	460	500	525	639	744	810	881	972	1109	1265	1397	1729	
38	460	514	598	756	847	895	1096	1182	1243	1513	1789	1947	2119	2295	2623	3031	3393	4239	
	188	210	244	306	343	362	424	474	498	590	687	747	812	897	1023	1167	1288	1595	
39	439	490	570	720	811	858	1044	1152	1210	1435	1702	1848	2019	2176	2488	2877	3220	4023	4489
	175	195	226	284	320	338	393	439	472	545	635	690	751	829	945	1079	1191	1474	1631
40	418	468	544	685	774	817	994	1105	1180	1365	1617	1755	1918	2068	2365	2734	3060	3822	4266
	162	182	210	263	297	314	363	406	449	505	588	639	695	768	876	999	1103	1365	1510
41	400	447	520	655	736	780	948	1053	1152	1297	1539	1669	1825	1968	2250	2601	2911	3636	4059
	152	169	196	245	276	292	337	378	418	468	545	593	645	712	813	927	1024	1267	1402
42	382	427	496	625	702	745	903	1002	1101	1236	1465	1591	1738	1875	2143	2478	2773	3463	3867
	141	158	182	228	257	272	313	351	388	435	507	552	600	662	755	862	952	1178	1303
43	366	409	475	598	669	712	861	955	1051	1179	1398	1516	1657	1788	2044	2362	2644	3303	3687
	132	148	171	211	239	254	292	326	361	406	472	514	559	617	704	803	886	1097	1214
44	351	393	456	571	639	682	822	912	1006	1126	1335	1449	1582	1707	1951	2256	2524	3154	3520
	124	138	160	197	223	238	272	304	337	378	440	479	521	575	656	749	827	1023	1132
45	336	376	436	546	610	652	786	873	963	1075	1275	1384	1513	1632	1864	2155	2413	3013	3364
	116	130	150	184	208	222	254	285	315	353	412	448	487	538	613	700	772	956	1058
46	322	361	420	522	583	625	751	834	924	1029	1219	1324	1447	1561	1785	2062	2308	2883	3219
	109	122	141	172	195	208	238	266	294	331	385	419	456	503	574	655	723	895	990
47	310	346	403	501	559	600	720	799	885	985	1168	1267	1386	1494	1708	1975	2211	2761	3082
	102	114	132	161	182	196	223	249	276	310	361	393	427	471	538	614	677	838	927
48	298	333	387	480	535	576	690	766	850	945	1120	1215	1329	1432	1638	1893	2118	2646	2953
	96	107	124	152	171	184	209	234	259	291	339	368	401	442	504	576	636	787	870

LRFD

STANDARD LOAD TABLE/OPEN WEB STEEL JOISTS, LH-SERIES
Based on a 50 ksi Maximum Yield Strength - Loads Shown In Pounds Per Linear Foot (plf)

Joist Designation	28LH05	28LH06	28LH07	28LH08	28LH09	28LH10	28LH11	28LH12	28LH13	28LH14	28LH15	28LH16	28LH17	28LH18	28LH19	28LH20	28LH21	28LH22	28LH23
Depth (in.)	28	28	28	28	28	28	28	28	28	28	28	28	28	28	28	28	28	28	28
Approx. Wt. (lbs./ft.)	13	16	17	18	21	23	25	27	30	35	38	42	49	56	63	79	88	102	111
Span (ft.) ▼																			
28	939	1246	1452	1554	2013	2157	2355	2758	3051	3688	3997								
	626	831	968	1036	1342	1438	1570	1839	1944	2459	2665								
29	894	1186	1380	1474	1906	2043	2230	2611	2883	3486	3777	4443							
	596	791	920	983	1271	1362	1487	1674	1747	2324	2518	2839							
30	852	1132	1311	1401	1806	1936	2113	2476	2727	3298	3574	4197							
	568	755	874	934	1186	1291	1380	1510	1576	2130	2317	2561							
31	813	1080	1246	1333	1714	1837	2005	2349	2583	3124	3385	3970							
	542	720	818	873	1074	1169	1249	1367	1427	1928	2098	2319							
32	775	1030	1186	1269	1627	1744	1905	2232	2449	2962	3210	3760	4332						
	499	658	743	793	975	1062	1134	1242	1296	1751	1905	2106	2406						
33	741	984	1129	1209	1548	1659	1810	2121	2325	2812	3048	3565	4107						
	454	600	677	722	888	967	1033	1131	1181	1595	1735	1918	2192						
34	708	940	1077	1152	1473	1578	1723	2019	2211	2673	2896	3385	3888	4404					
	415	548	618	660	811	883	944	1033	1079	1457	1585	1752	2002	2286					
35	676	900	1027	1099	1402	1503	1641	1923	2103	2542	2755	3205	3667	4186					
	380	502	566	604	743	809	865	946	988	1335	1452	1605	1834	2094					
36	648	861	981	1050	1338	1434	1564	1834	2002	2421	2625	3027	3465	3982	4492				
	349	461	520	555	682	743	794	869	907	1226	1333	1474	1684	1923	2127				
37	621	825	937	1003	1276	1368	1494	1749	1908	2308	2502	2865	3279	3790	4249				
	321	424	478	511	628	684	731	800	835	1128	1227	1356	1550	1770	1958				
38	594	790	897	960	1219	1306	1426	1670	1821	2202	2386	2715	3106	3592	4027				
	296	391	441	471	579	631	674	738	770	1040	1132	1251	1429	1632	1806				
39	570	757	859	918	1165	1249	1363	1597	1740	2103	2280	2575	2947	3409	3822				
	274	362	408	435	536	583	623	682	712	962	1046	1157	1321	1509	1670				
40	547	727	823	880	1114	1195	1305	1528	1662	2010	2179	2448	2800	3238	3631				
	254	335	378	403	496	540	577	632	659	891	969	1071	1224	1398	1546				
41	525	699	789	843	1062	1144	1249	1464	1590	1923	2085	2329	2665	3082	3454	4326			
	236	311	351	374	460	501	536	586	612	827	899	994	1136	1297	1435	1782			
42	505	672	757	810	1000	1093	1170	1285	1342	1842	1996	2218	2538	2935	3291	4120			
	219	289	326	348	428	466	498	545	569	769	836	924	1056	1206	1334	1657			
43	484	643	726	775	958	1056	1143	1255	1311	1765	1912	2115	2421	2799	3138	3930	4387		
	205	270	305	325	400	439	475	520	543	716	779	861	983	1123	1243	1543	1708		
44	465	618	696	744	918	1018	1104	1227	1281	1693	1834	2019	2311	2673	2997	3751	4189		
	192	253	285	305	375	414	448	496	518	668	726	803	917	1048	1159	1439	1593		
45	445	592	667	712	879	976	1066	1200	1252	1624	1761	1930	2209	2554	2863	3585	4003	4404	
	180	238	267	285	351	388	423	476	495	624	679	750	857	979	1083	1345	1489	1688	
46	429	568	640	684	844	937	1023	1173	1224	1560	1692	1846	2113	2443	2740	3430	3829	4212	
	169	223	251	268	329	364	397	454	472	584	635	702	802	916	1013	1258	1393	1579	
47	412	546	615	657	810	900	982	1149	1198	1498	1626	1768	2023	2340	2623	3285	3667	4033	
	159	209	236	252	309	342	373	435	452	547	595	658	751	858	950	1179	1305	1480	
48	397	525	591	630	778	864	943	1105	1173	1437	1564	1695	1939	2242	2514	3148	3516	3867	4425
	150	197	222	236	291	322	351	408	433	513	558	617	705	805	891	1106	1225	1389	1510
49	382	505	568	604	748	831	907	1063	1149	1378	1506	1626	1860	2151	2412	3021	3372	3709	4254
	142	186	209	222	274	303	331	383	415	482	525	580	663	757	837	1040	1151	1305	1419
50	367	486	547	580	721	799	873	1023	1126	1323	1446	1561	1786	2065	2316	2899	3238	3561	4090
	133	175	197	209	258	285	312	361	396	454	493	546	623	712	788	978	1083	1228	1335
51	355	469	528	556	694	769	841	984	1083	1272	1389	1500	1716	1984	2226	2787	3111	3421	3937
	126	166	186	196	243	269	294	340	373	427	465	514	587	670	742	921	1020	1156	1257
52	342	451	508	535	669	742	810	948	1041	1222	1336	1443	1651	1909	2140	2679	2992	3291	3793
	119	156	176	185	228	255	278	321	352	403	438	485	554	632	700	869	962	1090	1186
53	330	436	490	516	645	715	781	913	1002	1176	1285	1387	1588	1837	2059	2578	2880	3166	3655
	113	148	166	175	216	241	263	303	332	380	414	457	523	597	660	820	908	1029	1119
54	319	421	478	496	622	690	753	880	964	1132	1239	1336	1530	1770	1983	2484	2773	3049	3526
	107	140	158	165	204	228	249	285	314	359	391	432	494	564	624	775	858	973	1058
55	309	406	457	478	601	666	727	849	930	1092	1194	1288	1474	1705	1912	2394	2673	2940	3403
	102	133	150	156	193	215	236	270	297	340	370	409	467	534	591	733	812	921	1001
56	298	393	442	462	580	643	702	819	897	1053	1150	1242	1422	1644	1843	2308	2577	2835	3286
	97	126	142	148	183	204	223	256	281	322	350	387	443	505	559	695	769	872	948

LRFD

STANDARD LOAD TABLE/OPEN WEB STEEL JOISTS, LH-SERIES
Based on a 50 ksi Maximum Yield Strength - Loads Shown In Pounds Per Linerar Foot (plf)

Joist Designation	32LH06	32LH07	32LH08	32LH09	32LH10	32LH11	32LH12	32LH13	32LH14	32LH15	32LH16	32LH17	32LH18	32LH19	32LH20	32LH21	32LH22	32LH23	32LH24
Depth (in.)	32	32	32	32	32	32	32	32	32	32	32	32	32	32	32	32	32	32	32
Approx. Wt. (lbs./ft.)	14	16	17	21	21	24	27	30	33	35	42	49	56	62	78	87	101	110	124
Span (ft.) ↓																			
32	982	1102	1243	1648	1776	1944	2283	2683	2874	3075	4036								
	655	735	829	1099	1184	1296	1522	1789	1916	2050	2691								
33	943	1057	1189	1573	1696	1857	2179	2557	2740	2931	3841	4426							
	629	705	793	1049	1131	1238	1453	1705	1827	1870	2553	2920							
34	907	1017	1140	1504	1620	1774	2082	2440	2613	2796	3660	4218							
	605	678	760	1003	1080	1183	1388	1605	1653	1708	2332	2668							
35	871	976	1092	1438	1549	1696	1992	2329	2494	2668	3489	4021							
	581	651	728	938	1033	1131	1323	1470	1514	1564	2136	2443							
36	838	939	1047	1375	1483	1623	1906	2226	2383	2550	3330	3837	4335						
	559	626	689	861	950	1040	1215	1350	1391	1437	1961	2244	2563						
37	805	903	1005	1317	1420	1554	1825	2128	2278	2439	3180	3664	4140						
	524	584	634	793	875	957	1118	1243	1280	1322	1805	2065	2359						
38	775	870	964	1263	1360	1489	1749	2037	2181	2332	3039	3502	3957						
	484	539	585	731	807	883	1032	1146	1181	1220	1665	1905	2176						
39	747	837	925	1210	1305	1428	1677	1950	2088	2235	2907	3351	3786	4335					
	447	498	540	676	746	816	954	1060	1091	1127	1539	1761	2012	2230					
40	718	807	889	1161	1251	1369	1609	1869	2001	2140	2784	3208	3624	4144					
	414	461	501	626	691	756	883	981	1011	1044	1426	1631	1863	2066					
41	693	777	855	1114	1201	1315	1545	1792	1918	2053	2667	3073	3472	3966					
	384	428	465	581	641	701	820	911	938	969	1323	1513	1729	1917					
42	667	748	823	1071	1155	1263	1483	1719	1842	1971	2557	2934	3330	3798					
	357	398	432	540	596	652	762	847	872	901	1230	1407	1608	1782					
43	645	723	792	1030	1110	1215	1426	1651	1768	1893	2443	2797	3195	3633					
	333	371	402	503	555	607	710	789	812	839	1146	1310	1497	1660					
44	621	697	763	990	1068	1168	1372	1587	1699	1818	2332	2671	3069	3468	4350				
	310	346	375	469	518	567	662	736	758	783	1069	1222	1397	1548	1927				
45	600	673	735	954	1027	1125	1320	1525	1633	1749	2229	2553	2949	3315	4156				
	290	323	351	439	484	529	619	687	708	731	998	1142	1305	1447	1801				
46	579	649	709	918	990	1083	1272	1468	1572	1683	2133	2442	2824	3171	3976	4441			
	271	302	328	410	453	495	579	643	663	684	934	1069	1221	1354	1685	1866			
47	559	628	684	885	954	1044	1225	1414	1513	1620	2041	2338	2704	3037	3808	4252			
	254	283	307	385	424	464	542	603	621	641	875	1001	1144	1268	1579	1749			
48	541	607	660	849	919	1006	1182	1362	1458	1560	1957	2241	2593	2910	3649	4077	4485		
	239	266	288	361	398	436	509	566	583	602	821	940	1074	1190	1482	1641	1862		
49	523	586	637	816	886	970	1140	1312	1405	1504	1878	2151	2487	2793	3501	3910	4303		
	224	250	271	339	374	409	478	531	547	565	772	883	1009	1118	1392	1542	1750		
50	507	568	616	774	856	937	1101	1225	1264	1305	1803	2064	2388	2680	3361	3754	4131		
	211	235	255	319	352	385	450	500	515	532	726	831	949	1052	1310	1451	1646		
51	489	549	595	747	825	903	1068	1201	1239	1279	1732	1984	2295	2575	3231	3607	3970	4477	
	199	223	242	302	332	363	428	480	495	511	684	782	894	991	1234	1366	1550	1689	
52	472	529	574	720	796	870	1032	1177	1215	1255	1666	1908	2206	2478	3106	3469	3817	4315	
	189	211	229	285	315	343	406	461	476	492	645	738	843	935	1163	1288	1462	1593	
53	456	511	553	694	768	840	996	1156	1192	1231	1603	1836	2124	2383	2989	3339	3673	4162	4381
	179	200	216	270	297	325	384	444	458	473	609	697	796	882	1098	1216	1380	1504	1628
54	441	493	535	670	742	811	961	1113	1170	1207	1543	1768	2046	2296	2880	3216	3538	4018	4219
	169	189	205	256	282	308	364	420	440	454	575	658	752	834	1038	1150	1305	1421	1539
55	426	477	517	648	717	783	928	1072	1149	1186	1488	1704	1971	2212	2775	3099	3409	3880	4066
	161	179	194	243	267	292	345	397	417	438	544	623	712	789	982	1088	1234	1344	1456
56	412	462	499	627	693	757	897	1035	1107	1164	1435	1644	1900	2134	2676	2989	3288	3748	3921
	153	170	184	230	254	277	327	376	395	422	516	590	674	747	930	1030	1169	1273	1379
57	399	447	483	606	667	732	867	999	1069	1144	1384	1585	1834	2059	2583	2884	3174	3624	3784
	145	162	175	219	240	263	311	354	374	407	489	559	639	708	882	977	1108	1207	1307
58	385	432	468	586	645	709	838	964	1032	1125	1336	1531	1771	1989	2493	2785	3064	3505	3654
	138	154	167	208	228	251	295	336	355	393	464	531	606	672	837	927	1051	1145	1240
59	373	418	453	568	624	687	811	931	997	1087	1291	1479	1711	1921	2409	2691	2961	3393	3531
	131	146	159	196	217	239	281	319	337	374	440	504	576	638	794	880	999	1088	1178
60	363	406	439	550	603	664	786	900	964	1051	1249	1431	1654	1857	2329	2601	2862	3285	3412
	125	140	151	189	206	227	267	304	321	355	419	479	547	607	755	836	949	1034	1120
61	351	393	426	534	583	643	762	871	933	1017	1207	1383	1600	1797	2253	2517	2769	3183	3301
	119	133	144	180	196	216	255	288	304	338	398	456	521	577	718	796	903	984	1065
62	340	381	412	517	564	624	738	843	903	984	1168	1339	1549	1738	2181	2436	2679	3085	3195
	114	127	137	172	186	206	243	275	290	322	379	434	496	549	684	758	860	937	1014
63	330	370	400	502	546	604	715	816	874	952	1132	1296	1500	1684	2112	2358	2595	2991	3094
	108	121	131	164	178	196	232	262	276	306	361	413	472	524	652	722	819	892	966
64	321	360	388	487	529	585	694	790	846	924	1096	1255	1453	1632	2046	2284	2514	2901	2997
	104	116	125	157	169	187	221	249	264	292	344	394	450	499	622	688	781	851	922

LRFD

STANDARD LOAD TABLE/OPEN WEB STEEL JOISTS, LH-SERIES
Based on a 50 ksi Maximum Yield Strength - Loads Shown In Pounds Per Linerar Foot (plf)

Joist Designation	36LH07	36LH08	36LH09	36LH10	36LH11	36LH12	36LH13	36LH14	36LH15	36LH16	36LH17	36LH18	36LH19	36LH20	36LH21	36LH22	36LH23	36LH24	36LH25
Depth (in.)	36	36	36	36	36	36	36	36	36	36	36	36	36	36	36	36	36	36	36
Approx. Wt. (lbs./ft.)	16	18	21	21	23	25	30	36	36	44	49	58	64	81	92	100	122	130	149
Span (ft.) ↓																			
36	873	1002	1276	1509	1596	1909	2299	2533	2742	3511	4048								
	582	668	851	1006	1064	1273	1533	1689	1828	2341	2699								
37	843	966	1230	1450	1533	1836	2206	2431	2631	3364	3879	4381							
	562	644	820	967	1022	1224	1471	1621	1754	2243	2586	2921							
38	814	930	1170	1393	1474	1765	2118	2334	2526	3225	3718	4200							
	543	620	780	929	983	1177	1412	1556	1684	2139	2449	2799							
39	787	897	1143	1341	1419	1698	2035	2241	2425	3094	3567	4030							
	525	598	762	894	946	1132	1357	1494	1592	1977	2264	2587							
40	762	864	1102	1290	1365	1635	1956	2154	2331	2970	3424	3868	4479						
	508	576	735	839	910	1088	1275	1401	1475	1831	2097	2396	2661						
41	736	834	1065	1243	1314	1573	1881	2071	2241	2853	3289	3715	4294						
	491	553	704	778	847	1009	1183	1300	1369	1699	1946	2224	2469						
42	712	805	1027	1197	1266	1516	1809	1993	2157	2742	3162	3571	4122						
	469	514	655	724	787	938	1100	1209	1272	1580	1809	2068	2295						
43	690	777	991	1153	1221	1461	1741	1918	2076	2637	3040	3435	3957						
	437	479	610	674	733	874	1025	1126	1185	1471	1685	1926	2138						
44	667	750	958	1113	1177	1410	1677	1848	1999	2538	2925	3306	3802						
	408	447	569	629	684	815	956	1050	1106	1372	1572	1796	1994						
45	646	726	927	1074	1135	1360	1617	1780	1927	2443	2817	3183	3655						
	381	417	532	587	639	762	893	981	1033	1282	1468	1678	1863						
46	625	700	895	1036	1096	1312	1558	1717	1858	2353	2713	3066	3517	4423					
	356	391	497	550	598	713	836	918	967	1200	1374	1570	1744	2174					
47	606	678	867	1000	1059	1267	1503	1656	1792	2268	2616	2955	3387	4258					
	334	366	466	515	560	668	783	860	906	1124	1287	1472	1634	2038					
48	588	655	838	967	1023	1224	1450	1599	1729	2188	2523	2850	3262	4102					
	313	344	437	483	526	627	735	807	850	1055	1208	1381	1533	1912					
49	570	634	811	934	988	1183	1401	1543	1671	2110	2434	2751	3144	3954	4353				
	294	323	411	454	494	589	690	759	799	991	1135	1297	1440	1797	1991				
50	552	615	786	903	955	1144	1354	1491	1614	2038	2343	2656	3033	3813	4198				
	277	304	387	427	465	554	650	714	751	933	1068	1221	1355	1690	1873				
51	535	595	762	874	924	1107	1308	1441	1560	1965	2251	2565	2926	3675	4051				
	261	286	364	403	438	522	612	672	708	878	1006	1150	1276	1592	1764				
52	520	576	738	846	895	1072	1266	1395	1509	1888	2164	2479	2814	3534	3912	4344			
	246	270	343	380	413	492	577	634	667	828	949	1084	1204	1501	1664	1889			
53	505	559	715	819	867	1038	1224	1335	1459	1818	2083	2397	2709	3400	3778	4180			
	232	255	324	358	390	465	545	599	630	782	896	1024	1136	1417	1571	1783			
54	490	541	693	790	838	1005	1185	1306	1413	1750	2007	2319	2608	3274	3652	4026	4465		
	220	241	306	339	368	439	515	566	596	739	846	967	1074	1340	1484	1685	1838		
55	477	525	673	763	813	975	1147	1264	1368	1687	1933	2236	2514	3156	3526	3880	4317		
	208	228	290	320	349	416	487	535	563	699	801	915	1016	1267	1404	1594	1739		
56	463	510	652	736	789	945	1111	1225	1326	1627	1864	2157	2424	3043	3400	3742	4174	4471	
	197	216	275	303	330	394	461	507	534	662	758	867	962	1200	1330	1510	1647	1787	
57	450	495	634	711	765	916	1077	1188	1285	1570	1800	2082	2340	2937	3282	3612	4038	4315	
	187	204	260	288	313	373	437	481	506	628	719	822	912	1138	1261	1431	1562	1694	
58	438	481	616	681	742	889	1045	1152	1213	1516	1737	2010	2259	2836	3168	3487	3909	4167	
	177	194	247	273	297	354	415	456	480	596	682	780	866	1080	1196	1358	1482	1607	
59	424	466	597	660	720	862	1012	1132	1192	1465	1678	1942	2182	2740	3061	3369	3786	4026	
	168	185	235	260	283	338	395	434	464	566	648	740	822	1025	1136	1290	1407	1526	
60	411	453	579	639	697	835	981	1093	1171	1416	1623	1878	2110	2649	2959	3258	3669	3892	
	160	176	224	248	269	322	376	412	448	538	616	704	781	975	1080	1226	1338	1451	
61	399	439	561	619	676	810	951	1059	1153	1369	1570	1816	2041	2563	2863	3151	3556	3765	4456
	153	168	214	236	257	307	359	392	434	512	586	670	743	927	1027	1166	1273	1380	1608
62	387	426	544	601	657	784	922	1024	1116	1326	1519	1758	1975	2481	2770	3049	3448	3643	4312
	146	160	204	225	246	292	342	373	413	487	558	638	708	883	978	1111	1212	1314	1531
63	376	414	528	583	637	762	894	991	1081	1284	1471	1702	1912	2401	2683	2953	3345	3528	4176
	140	153	195	215	234	279	327	356	394	464	531	607	674	841	932	1058	1155	1252	1458
64	366	402	513	567	618	739	868	961	1047	1243	1425	1648	1854	2326	2599	2860	3247	3418	4045
	134	146	186	206	224	267	312	339	375	443	507	579	643	802	889	1009	1101	1194	1391
65	355	390	499	550	601	717	843	931	1015	1206	1381	1599	1797	2256	2520	2773	3153	3313	3922
	128	140	179	197	214	255	298	323	358	422	484	553	614	766	848	963	1051	1139	1327
66	345	379	484	535	583	696	819	903	984	1168	1339	1549	1741	2187	2443	2689	3063	3213	3804
	122	134	171	188	205	243	285	309	342	403	462	528	586	731	810	920	1003	1088	1268
67	336	369	471	520	567	675	796	876	955	1134	1300	1504	1690	2122	2370	2608	2976	3117	3690
	117	128	163	180	196	232	273	295	327	385	441	504	560	699	774	879	959	1040	1211
68	327	358	459	507	552	655	774	850	927	1101	1261	1459	1641	2059	2301	2532	2893	3025	3582
	112	123	157	173	188	222	262	283	312	369	422	482	536	668	740	841	917	994	1158
69	318	349	445	492	537	636	753	826	900	1069	1225	1417	1593	2001	2235	2460	2814	2938	3478
	107	118	150	165	180	213	251	270	299	353	404	462	513	639	708	804	877	952	1109
70	310	340	433	480	522	618	732	802	874	1039	1191	1377	1548	1944	2170	2389	2737	2854	3379
	103	113	144	159	173	204	240	259	286	338	387	442	491	612	678	770	840	911	1061
71	301	331	423	466	508	600	712	780	850	1009	1156	1338	1504	1888	2109	2322	2664	2775	3283
	99	109	138	152	166	195	231	247	274	323	370	423	470	587	650	738	805	873	1017
72	294	322	412	454	495	583	694	757	826	981	1125	1302	1462	1836	2050	2257	2593	2698	3193
	95	104	133	146	159	187	222	237	263	310	355	406	451	562	623	707	772	837	975

LRFD

STANDARD LOAD TABLE/OPEN WEB STEEL JOISTS, LH-SERIES
Based on a 50 ksi Maximum Yield Strength - Loads Shown In Pounds Per Linerar Foot (plf)

Joist Designation	40LH08	40LH09	40LH10	40LH11	40LH12	40LH13	40LH14	40LH15	40LH16	40LH17	40LH18	40LH19	40LH20	40LH21	40LH22	40LH23	40LH24	40LH25
Depth (in.)	40	40	40	40	40	40	40	40	40	40	40	40	40	40	40	40	40	40
Approx. Wt. (lbs./ft.)	16	21	21	22	25	30	35	36	42	51	56	64	81	93	100	121	127	148
Span (ft.) ↓																		
40	778	1057	1258	1318	1602	1945	2220	2482	2944	3565	4027							
	519	705	839	879	1068	1297	1480	1655	1963	2377	2685							
41	756	1023	1215	1275	1548	1876	2140	2395	2836	3435	3879							
	504	682	810	850	1032	1251	1427	1597	1891	2290	2586							
42	735	990	1174	1231	1495	1810	2065	2310	2733	3309	3738	4368						
	490	660	783	821	997	1207	1377	1540	1822	2206	2492	2874						
43	712	960	1135	1191	1446	1747	1993	2230	2634	3190	3604	4203						
	475	640	757	794	964	1165	1329	1487	1756	2106	2403	2677						
44	693	930	1098	1150	1398	1687	1926	2154	2541	3078	3477	4047						
	462	620	732	767	932	1125	1284	1436	1694	1965	2246	2497						
45	672	901	1062	1113	1353	1630	1860	2080	2452	2970	3354	3898						
	448	601	686	742	902	1061	1217	1357	1490	1836	2099	2333						
46	652	873	1027	1077	1309	1575	1797	2010	2367	2866	3238	3757						
	435	582	642	696	847	993	1139	1270	1394	1718	1964	2183						
47	634	846	994	1042	1267	1522	1738	1944	2286	2769	3129	3624						
	418	546	602	652	794	931	1067	1190	1307	1610	1840	2046						
48	616	820	963	1009	1227	1473	1681	1881	2209	2676	3022	3496	4399					
	392	512	565	612	745	873	1001	1116	1226	1510	1727	1920	2398					
49	600	796	933	978	1188	1425	1626	1819	2136	2586	2922	3376	4248					
	368	482	531	575	700	821	941	1049	1152	1419	1623	1804	2253					
50	583	772	904	948	1152	1380	1575	1761	2065	2502	2826	3261	4102					
	347	453	499	541	659	772	885	987	1084	1335	1527	1697	2120					
51	567	750	876	919	1116	1336	1524	1705	1998	2421	2734	3151	3964	4365				
	327	427	470	509	620	727	834	930	1021	1258	1438	1598	1997	2213				
52	552	729	849	891	1083	1294	1477	1651	1935	2343	2647	3046	3834	4221				
	308	402	443	480	585	686	786	877	963	1186	1356	1507	1883	2087				
53	537	708	823	864	1050	1254	1431	1600	1873	2269	2563	2947	3708	4083				
	291	380	419	454	552	647	742	828	909	1120	1280	1423	1778	1970				
54	522	687	799	838	1018	1216	1387	1552	1815	2197	2484	2851	3588	3951				
	275	359	396	429	522	612	702	782	859	1058	1210	1345	1680	1862				
55	508	669	777	814	988	1179	1345	1506	1758	2130	2407	2761	3474	3825	4351			
	260	340	374	406	494	579	664	740	813	1001	1145	1272	1590	1762	2001			
56	495	649	754	790	960	1144	1305	1461	1705	2065	2334	2674	3364	3705	4195			
	246	322	355	384	468	548	629	701	770	948	1084	1205	1505	1668	1895			
57	483	631	732	768	933	1110	1267	1417	1654	2004	2263	2592	3261	3591	4050	4410		
	233	305	336	364	444	520	596	664	730	899	1028	1142	1427	1582	1797	1962		
58	469	615	711	745	906	1078	1230	1377	1605	1944	2197	2512	3160	3481	3910	4273		
	221	289	319	346	421	493	566	631	693	853	975	1084	1354	1501	1705	1862		
59	457	598	691	724	880	1047	1195	1336	1557	1878	2133	2436	3066	3376	3778	4141		
	210	275	303	328	400	468	537	599	658	810	926	1029	1286	1425	1619	1768		
60	445	582	670	705	856	1017	1161	1299	1512	1816	2071	2362	2970	3276	3652	4015	4371	
	200	261	288	312	380	445	511	569	625	770	880	979	1222	1355	1539	1681	1825	
61	435	567	649	685	832	988	1128	1263	1470	1756	2011	2286	2872	3178	3532	3895	4228	
	190	249	274	297	361	424	486	542	595	732	837	931	1163	1289	1464	1599	1736	
62	424	552	628	667	810	961	1096	1227	1428	1699	1954	2212	2779	3087	3418	3781	4092	
	181	237	261	283	344	403	462	516	566	697	797	886	1107	1227	1394	1523	1653	
63	414	537	609	649	789	934	1066	1194	1387	1645	1900	2142	2692	2998	3310	3670	3963	
	173	226	249	269	328	384	441	491	540	664	760	845	1055	1169	1328	1451	1575	
64	403	523	591	631	768	909	1038	1161	1350	1594	1845	2076	2608	2914	3207	3565	3840	
	165	215	237	257	313	366	420	469	515	634	724	805	1006	1115	1267	1383	1502	
65	393	510	573	615	747	885	1009	1129	1312	1546	1788	2011	2527	2824	3109	3463	3721	4405
	157	205	226	245	298	350	401	447	491	605	691	769	960	1064	1209	1320	1434	1671
66	381	498	550	598	729	859	984	1101	1212	1498	1734	1951	2451	2739	3015	3367	3609	4273
	150	196	216	234	285	334	383	427	469	577	660	734	917	1016	1154	1261	1369	1596
67	370	484	535	582	708	835	957	1068	1194	1455	1683	1893	2379	2658	2925	3274	3501	4146
	144	188	207	224	273	320	367	408	455	552	631	701	876	971	1103	1205	1308	1525
68	361	472	520	567	688	813	930	1036	1176	1411	1633	1837	2308	2580	2839	3184	3399	4024
	138	180	198	215	261	307	351	390	441	528	603	671	838	929	1055	1152	1251	1458
69	351	459	507	552	670	792	904	1006	1158	1371	1585	1783	2242	2505	2757	3099	3300	3907
	132	173	190	207	251	295	336	373	428	505	577	642	802	889	1010	1103	1197	1396
70	342	447	493	537	652	771	880	978	1141	1332	1540	1732	2178	2433	2679	3016	3207	3796
	127	166	183	198	241	283	323	357	416	483	553	615	768	851	967	1056	1146	1336
71	333	436	481	523	636	750	856	949	1126	1294	1497	1684	2116	2365	2604	2937	3117	3690
	122	160	176	190	231	271	309	342	404	463	530	589	736	815	926	1012	1098	1280
72	325	424	469	510	619	730	834	924	1095	1258	1456	1638	2058	2299	2532	2860	3030	3586
	117	153	169	183	222	260	297	328	387	444	508	564	705	782	888	970	1053	1227
73	316	414	457	498	603	712	813	898	1065	1224	1416	1593	2002	2236	2461	2787	2947	3489
	112	147	162	176	213	250	285	315	371	426	487	541	677	750	852	930	1010	1177
74	309	403	445	484	588	694	792	874	1036	1191	1378	1549	1948	2176	2395	2716	2868	3394
	108	141	156	169	205	241	273	302	356	409	468	520	649	720	818	893	970	1130
75	301	394	435	472	573	676	772	850	1009	1159	1341	1509	1896	2118	2332	2647	2791	3304
	104	136	150	163	197	231	263	290	342	393	449	499	624	691	785	858	931	1085
76	294	384	424	462	559	660	753	828	982	1129	1306	1468	1846	2062	2271	2583	2718	3217
	100	131	144	157	189	223	252	279	329	377	431	480	599	664	754	824	895	1043
77	288	375	414	450	546	643	735	807	957	1099	1272	1431	1798	2008	2212	2520	2647	3135
	97	126	139	151	182	214	243	268	316	363	415	461	576	638	725	792	860	1003
78	280	366	403	439	532	628	717	786	933	1071	1239	1395	1752	1957	2155	2458	2580	3054
	93	122	134	145	176	207	233	258	304	349	399	443	554	614	698	762	827	964
79	274	358	393	429	519	613	699	766	909	1044	1209	1359	1708	1908	2101	2400	2514	2977
	90	118	129	140	169	199	225	248	292	336	384	427	533	591	671	733	796	928
80	267	349	382	418	507	598	682	747	886	1018	1177	1324	1665	1860	2049	2343	2452	2902
	86	113	124	135	163	192	216	239	282	323	370	411	513	569	646	706	767	893

LRFD

STANDARD LOAD TABLE/OPEN WEB STEEL JOISTS, LH-SERIES
Based on a 50 ksi Maximum Yield Strength - Loads Shown In Pounds Per Linerar Foot (plf)

Joist Designation	44LH09	44LH10	44LH11	44LH12	44LH13	44LH14	44LH15	44LH16	44LH17	44LH18	44LH19	44LH20	44LH21	44LH22	44LH23	44LH24	44LH25
Depth (in.)	44	44	44	44	44	44	44	44	44	44	44	44	44	44	44	44	44
Approx. Wt. (lbs./ft.)	19	21	22	25	30	31	36	42	47	57	64	82	93	101	118	127	147
Span (ft.) ↓																	
44	877	967	1140	1345	1587	1890	2199	2595	2893	3582	4224						
	585	645	760	897	1058	1260	1466	1730	1929	2388	2816						
45	852	940	1107	1305	1539	1830	2130	2509	2799	3465	4077						
	568	627	738	870	1026	1220	1420	1673	1866	2310	2718						
46	828	913	1074	1266	1492	1773	2062	2428	2709	3352	3937						
	552	609	716	844	995	1182	1375	1619	1806	2235	2625						
47	805	888	1042	1228	1449	1719	1999	2350	2622	3246	3805						
	537	592	695	819	966	1146	1333	1567	1748	2164	2504						
48	783	864	1011	1192	1407	1666	1938	2277	2539	3142	3678						
	522	576	674	795	938	1111	1292	1518	1661	2095	2350						
49	762	840	982	1158	1365	1615	1879	2205	2460	3045	3556	4477					
	508	560	652	772	910	1077	1253	1460	1561	1984	2208	2762					
50	741	817	954	1125	1326	1567	1822	2136	2383	2950	3441	4332					
	494	545	613	750	884	1028	1194	1374	1468	1867	2077	2598					
51	721	795	927	1092	1288	1519	1768	2071	2310	2860	3330	4194					
	481	530	578	713	845	968	1125	1294	1383	1758	1957	2447					
52	702	774	900	1062	1252	1476	1717	2008	2239	2773	3225	4060	4470				
	458	504	545	672	797	913	1061	1220	1304	1658	1845	2308	2559				
53	682	753	874	1032	1216	1432	1666	1948	2172	2689	3124	3933	4330				
	432	476	514	635	753	862	1002	1152	1231	1566	1742	2179	2416				
54	664	733	850	1003	1183	1390	1618	1890	2109	2610	3027	3811	4197				
	409	450	486	600	711	815	947	1089	1164	1480	1646	2059	2283				
55	648	714	826	975	1150	1351	1572	1834	2046	2533	2934	3694	4068				
	387	426	460	568	673	771	896	1030	1101	1400	1558	1948	2160				
56	631	696	804	949	1119	1314	1528	1782	1987	2460	2845	3583	3945				
	366	403	436	538	637	730	848	976	1043	1326	1475	1845	2046				
57	615	678	783	924	1089	1276	1485	1731	1930	2389	2761	3477	3828	4486			
	347	382	413	510	604	692	804	925	989	1257	1398	1749	1939	2203			
58	598	660	762	898	1062	1242	1444	1681	1875	2322	2680	3373	3715	4333			
	329	363	392	484	573	657	763	878	938	1192	1327	1660	1840	2091			
59	583	643	741	874	1032	1207	1405	1633	1822	2257	2602	3276	3607	4186	4455		
	313	344	372	459	544	624	725	834	891	1133	1260	1576	1748	1986	2171		
60	568	627	721	852	1005	1174	1366	1588	1771	2194	2527	3181	3504	4047	4324		
	297	327	354	437	518	593	689	792	847	1077	1198	1498	1661	1887	2064		
61	555	612	703	829	978	1143	1330	1545	1723	2134	2455	3091	3405	3915	4198		
	283	312	337	415	492	564	655	754	806	1024	1140	1425	1580	1796	1963		
62	541	597	685	808	954	1113	1294	1503	1677	2076	2386	3004	3309	3789	4077		
	269	297	320	396	469	537	624	718	767	975	1085	1357	1505	1710	1869		
63	528	582	667	787	928	1083	1261	1462	1632	2020	2320	2922	3217	3669	3961	4398	
	257	283	305	377	447	512	595	684	731	929	1034	1293	1434	1629	1781	1936	
64	514	568	651	768	906	1056	1228	1423	1588	1966	2256	2841	3129	3555	3850	4260	
	245	270	291	359	426	488	567	652	697	886	986	1233	1367	1554	1699	1846	
65	502	555	634	748	883	1027	1197	1386	1546	1915	2196	2764	3043	3445	3744	4129	
	234	257	278	343	407	466	541	622	665	846	941	1177	1305	1483	1621	1762	
66	490	541	616	730	861	1002	1165	1350	1506	1866	2136	2691	2962	3342	3642	4005	
	223	246	265	328	388	445	517	594	635	807	898	1124	1246	1416	1548	1683	
67	478	528	598	712	840	976	1137	1315	1467	1818	2080	2619	2884	3241	3544	3885	
	213	235	254	313	371	425	494	568	607	772	859	1074	1191	1353	1479	1608	
68	468	516	582	694	819	952	1108	1282	1431	1771	2025	2550	2809	3147	3450	3771	4465
	204	225	243	299	355	406	472	543	581	738	821	1027	1139	1294	1415	1538	1793
69	456	504	565	678	799	928	1081	1249	1395	1726	1972	2484	2736	3055	3358	3663	4336
	195	215	232	286	340	389	452	520	556	706	786	983	1090	1238	1354	1471	1716
70	445	492	549	661	781	906	1054	1219	1359	1684	1918	2413	2667	2968	3271	3558	4213
	187	206	222	274	325	372	433	498	532	676	752	941	1043	1186	1296	1409	1643
71	436	481	534	646	762	883	1029	1188	1326	1642	1864	2344	2599	2884	3187	3457	4095
	179	197	213	263	312	357	415	477	510	648	721	902	1000	1136	1242	1350	1574
72	426	469	520	631	744	862	1005	1159	1294	1602	1813	2280	2533	2805	3105	3361	3981
	172	189	204	252	299	342	398	457	489	621	691	864	958	1089	1191	1294	1509
73	417	459	507	616	727	843	981	1131	1263	1564	1764	2218	2472	2728	3027	3270	3873
	165	181	196	242	287	328	381	439	469	596	663	829	919	1045	1142	1242	1448
74	408	450	487	603	715	823	958	1105	1185	1524	1716	2158	2410	2655	2952	3181	3768
	158	174	188	232	275	315	366	421	450	572	636	796	882	1003	1096	1192	1390
75	397	439	475	589	699	801	934	1078	1170	1483	1669	2100	2347	2584	2880	3097	3667
	152	168	181	224	265	302	352	405	438	549	611	764	847	963	1053	1144	1335
76	388	429	465	574	681	780	912	1051	1153	1444	1626	2046	2286	2517	2809	3016	3571
	146	162	175	215	254	291	339	390	426	528	587	734	814	925	1012	1100	1282
77	379	418	453	561	666	759	889	1026	1138	1407	1584	1992	2226	2451	2742	2938	3478
	141	155	168	207	246	279	326	375	415	507	564	706	783	889	973	1057	1233
78	370	408	442	547	649	739	868	1002	1125	1371	1543	1941	2169	2388	2677	2862	3390
	136	150	162	200	236	268	314	362	405	488	543	679	753	856	935	1017	1186
79	363	399	433	534	634	721	847	978	1098	1336	1504	1893	2115	2328	2614	2790	3304
	131	144	157	192	228	259	303	348	390	469	522	654	725	823	900	978	1141
80	354	390	423	520	619	703	826	955	1072	1303	1467	1845	2061	2269	2553	2721	3222
	127	139	151	185	220	249	292	336	376	452	503	629	698	793	867	942	1099
81	346	381	414	508	606	685	805	933	1048	1272	1431	1800	2011	2214	2494	2653	3142
	122	134	146	179	212	240	281	324	363	435	484	606	672	764	835	907	1058
82	339	373	403	496	592	669	786	912	1024	1240	1396	1756	1962	2160	2437	2589	3066
	118	130	140	172	205	231	271	313	351	420	467	584	648	736	805	875	1020
83	331	364	396	484	579	654	768	891	1000	1210	1362	1713	1914	2107	2382	2526	2992
	114	125	136	166	198	223	261	302	338	404	450	563	624	709	776	843	983
84	324	357	387	472	565	637	750	870	978	1182	1330	1672	1869	2058	2329	2466	2920
	110	121	131	160	191	215	252	291	327	390	434	543	602	684	748	813	948
85	316	349	378	462	553	622	732	852	957	1153	1299	1633	1825	2010	2278	2409	2853
	106	117	127	155	185	207	243	282	316	376	419	524	581	660	722	785	915
86	310	342	370	450	541	609	714	832	936	1126	1269	1596	1783	1963	2227	2353	2787
	103	113	123	149	179	200	234	272	305	363	404	506	561	637	697	758	884
87	303	334	363	439	529	594	699	814	915	1101	1239	1558	1741	1918	2179	2299	2722
	99	110	119	144	173	193	227	263	295	351	391	489	542	616	673	732	853
88	297	327	354	430	519	580	682	796	895	1077	1212	1524	1702	1875	2133	2247	2661
	96	106	115	139	167	187	219	255	285	339	377	472	523	595	650	707	824

LRFD

STANDARD LOAD TABLE/OPEN WEB STEEL JOISTS, LH-SERIES
Based on a 50 ksi Maximum Yield Strength - Loads Shown In Pounds Per Linear Foot (plf)

Joist Designation	48LH10	48LH11	48LH12	48LH13	48LH14	48LH15	48LH16	48LH17	48LH18	48LH19	48LH20	48LH21	48LH22	48LH23	48LH24	48LH25
Depth (in.)	48	48	48	48	48	48	48	48	48	48	48	48	48	48	48	48
Approx. Wt. (lbs./ft.)	21	22	25	29	32	36	42	47	57	62	79	87	101	109	124	144
Span (ft.) ↓																
48	807	871	1134	1357	1653	1896	2242	2517	3211	3805						
	538	581	756	905	1102	1264	1495	1678	2141	2537						
49	787	849	1104	1320	1606	1843	2178	2443	3118	3687						
	525	566	736	880	1071	1229	1452	1629	2079	2458						
50	768	828	1075	1285	1561	1791	2113	2371	3028	3573						
	512	552	717	857	1041	1194	1409	1581	2019	2382						
51	748	807	1047	1252	1519	1741	2053	2304	2941	3465	4363					
	499	538	698	835	1013	1161	1369	1536	1961	2310	2909					
52	730	787	1020	1219	1477	1693	1995	2238	2857	3360	4231					
	487	525	680	813	985	1129	1330	1492	1905	2217	2776					
53	712	768	993	1188	1437	1648	1938	2175	2776	3259	4105					
	475	512	662	792	958	1099	1292	1450	1851	2093	2621					
54	694	750	967	1156	1398	1603	1884	2113	2698	3163	3984	4387				
	463	500	645	771	932	1069	1251	1399	1776	1978	2477	2747				
55	678	732	942	1126	1360	1560	1831	2055	2623	3070	3868	4260				
	452	488	628	751	897	1027	1184	1324	1681	1872	2344	2599				
56	661	714	918	1098	1324	1519	1782	1999	2551	2982	3757	4137				
	441	476	603	720	849	973	1121	1254	1592	1773	2220	2461				
57	646	697	895	1071	1290	1479	1732	1944	2482	2898	3649	4018				
	422	455	572	682	805	922	1063	1188	1509	1680	2104	2333				
58	630	681	873	1044	1255	1440	1686	1891	2416	2815	3547	3906				
	400	432	542	648	764	875	1008	1128	1432	1595	1997	2214				
59	615	664	850	1018	1222	1402	1641	1842	2352	2737	3448	3796	4483			
	380	410	515	615	726	831	958	1071	1360	1514	1896	2103	2390			
60	601	649	829	993	1192	1366	1597	1792	2289	2661	3352	3691	4359			
	362	390	490	585	690	790	910	1018	1293	1439	1803	1999	2272			
61	588	634	810	969	1161	1332	1555	1746	2229	2589	3261	3591	4240	4458		
	344	371	466	556	656	751	866	968	1230	1369	1715	1901	2161	2365		
62	573	619	790	945	1132	1299	1515	1701	2172	2518	3172	3493	4126	4335		
	327	353	444	530	625	715	825	922	1171	1304	1633	1810	2058	2252		
63	561	604	771	922	1104	1266	1476	1657	2116	2451	3088	3400	4017	4215		
	312	336	423	505	595	682	786	879	1116	1242	1556	1725	1961	2146		
64	547	591	753	900	1077	1234	1438	1615	2062	2386	3006	3310	3901	4101		
	298	321	403	481	568	650	749	838	1064	1185	1484	1645	1870	2046		
65	535	577	735	879	1050	1204	1402	1575	2010	2323	2928	3225	3781	3991		
	284	306	385	459	542	620	715	800	1015	1131	1416	1570	1784	1953		
66	523	565	717	858	1024	1176	1368	1536	1960	2263	2853	3141	3667	3885	4401	
	271	292	367	439	517	592	683	764	970	1080	1352	1499	1704	1865	2029	
67	511	552	700	838	1000	1147	1333	1497	1912	2206	2779	3060	3558	3783	4269	
	259	279	351	419	494	566	653	730	927	1032	1292	1433	1629	1782	1939	
68	501	540	684	819	976	1120	1302	1461	1866	2149	2709	2983	3454	3685	4144	
	248	267	336	401	473	541	624	698	886	987	1236	1370	1557	1704	1854	
69	489	528	669	799	952	1093	1270	1425	1821	2097	2641	2908	3354	3591	4024	
	237	256	321	384	453	518	597	668	848	944	1182	1311	1490	1631	1774	
70	478	516	654	781	931	1068	1239	1392	1777	2044	2575	2836	3258	3499	3909	
	227	245	308	367	433	496	572	640	812	904	1132	1255	1427	1562	1699	
71	468	505	639	765	909	1042	1210	1359	1735	1993	2512	2767	3166	3411	3799	4500
	218	235	295	352	415	475	548	613	778	866	1085	1203	1367	1496	1628	1899
72	457	495	624	747	888	1018	1182	1326	1693	1945	2451	2700	3079	3327	3694	4375
	209	225	283	337	398	456	525	587	746	831	1040	1153	1311	1434	1560	1821

LRFD

STANDARD LOAD TABLE/OPEN WEB STEEL JOISTS, LH-SERIES
Based on a 50 ksi Maximum Yield Strength - Loads Shown In Pounds Per Linear Foot (plf)

Joist Designation	48LH10	48LH11	48LH12	48LH13	48LH14	48LH15	48LH16	48LH17	48LH18	48LH19	48LH20	48LH21	48LH22	48LH23	48LH24	48LH25
Depth (in.)	48	48	48	48	48	48	48	48	48	48	48	48	48	48	48	48
Approx. Wt. (lbs./ft.)	21	22	25	29	32	36	42	47	57	62	79	87	101	109	124	144
Span (ft.) ↓																
73	448	484	610	730	868	996	1153	1296	1654	1899	2392	2635	2995	3244	3594	4255
	200	216	271	324	382	437	504	564	715	797	998	1106	1257	1376	1497	1746
74	439	474	597	714	849	973	1128	1266	1617	1854	2335	2572	2914	3166	3496	4141
	192	207	260	311	367	420	484	541	687	765	958	1062	1207	1321	1437	1676
75	429	463	583	699	829	951	1101	1236	1579	1810	2280	2512	2836	3090	3403	4030
	184	199	250	298	352	403	464	519	659	734	920	1020	1159	1268	1380	1610
76	421	454	571	684	811	930	1077	1209	1543	1768	2227	2454	2761	3016	3313	3925
	177	191	240	287	338	387	446	499	634	706	884	980	1114	1219	1326	1547
77	412	445	559	669	793	910	1053	1182	1509	1726	2176	2397	2691	2946	3228	3823
	170	184	231	276	325	372	429	480	609	678	849	942	1071	1172	1275	1487
78	403	435	547	655	775	891	1029	1155	1476	1687	2127	2341	2622	2877	3145	3726
	164	177	222	265	313	358	413	462	586	652	817	906	1030	1127	1226	1430
79	396	426	535	642	759	871	1006	1129	1443	1650	2076	2289	2556	2811	3066	3631
	158	170	214	255	301	345	397	444	564	628	786	872	991	1084	1180	1376
80	387	418	525	628	742	852	984	1105	1411	1609	2025	2238	2491	2746	2989	3541
	152	164	206	246	290	332	382	428	543	604	757	839	954	1044	1136	1325
81	379	409	514	615	727	834	963	1081	1381	1569	1975	2188	2430	2685	2916	3453
	146	158	198	237	279	320	368	412	523	582	729	809	919	1006	1094	1277
82	369	399	504	603	712	817	943	1059	1351	1531	1926	2140	2371	2625	2845	3369
	141	152	191	228	269	308	355	397	504	561	703	779	886	969	1054	1230
83	361	390	493	589	696	799	922	1035	1323	1494	1881	2094	2314	2566	2776	3288
	136	147	185	221	260	298	343	383	486	541	677	751	854	934	1017	1186
84	354	382	483	576	681	781	901	1012	1296	1458	1836	2049	2259	2511	2710	3210
	132	142	179	213	251	287	331	371	468	522	653	725	824	901	981	1144
85	346	373	472	564	666	765	882	990	1264	1425	1792	2002	2206	2457	2647	3135
	127	137	173	206	243	278	320	358	452	504	631	699	795	870	946	1104
86	339	366	462	552	651	748	864	969	1236	1390	1750	1956	2154	2403	2586	3061
	123	133	167	199	234	269	310	346	436	486	609	675	767	840	913	1066
87	331	358	451	540	637	732	844	948	1207	1359	1710	1911	2104	2352	2526	2992
	119	129	161	193	227	260	299	335	421	469	588	652	741	811	882	1029
88	325	351	442	529	624	717	826	928	1179	1329	1672	1869	2058	2302	2469	2923
	116	125	156	187	220	252	289	324	407	454	568	630	716	783	852	994
89	318	343	433	517	610	702	810	909	1153	1299	1635	1827	2011	2254	2413	2859
	112	120	151	180	212	244	280	314	394	438	549	609	692	757	824	961
90	312	337	424	507	598	687	792	889	1128	1270	1597	1786	1966	2208	2359	2794
	108	117	147	175	206	236	271	304	381	424	531	589	669	732	797	929
91	306	330	415	498	585	672	777	871	1102	1242	1563	1746	1923	2163	2308	2733
	105	113	142	170	199	228	263	294	368	410	513	569	647	708	770	899
92	300	324	408	487	574	658	760	853	1078	1215	1528	1708	1881	2119	2257	2674
	102	110	138	164	193	221	255	285	356	397	497	551	626	685	745	870
93	294	318	399	477	562	645	745	837	1056	1189	1497	1672	1842	2077	2209	2617
	99	106	133	159	187	214	247	276	345	384	481	533	606	663	722	842
94	288	312	391	468	550	633	730	820	1033	1164	1464	1636	1801	2035	2163	2562
	96	103	129	154	181	208	239	268	334	372	466	516	587	642	699	815
95	282	306	384	459	540	619	715	804	1011	1138	1434	1602	1764	1995	2116	2508
	93	100	126	150	176	201	232	260	323	360	451	500	568	622	677	790
96	277	300	376	450	529	607	702	787	990	1116	1404	1569	1728	1956	2073	2455
	90	97	122	145	171	195	225	252	313	349	437	485	551	603	656	765

LRFD

METRIC LOAD TABLE/OPEN WEB STEEL JOISTS, LH-SERIES
Based on a 345 MPa Maximum Yield Strength - Loads Shown In Kilonewtons Per Meter (kN/m)

Joist Designation	18LH02	18LH03	18LH04	18LH05	18LH06	18LH07	18LH08	18LH09	18LH10	18LH11	18LH12	18LH13	18LH14	18LH15	18LH16	18LH17	18LH18	18LH19	18LH20
Depth (mm)	457	457	457	457	457	457	457	457	457	457	457	457	457	457	457	457	457	457	457
Approx. Wt. (kN/m)	0.15	0.16	0.18	0.21	0.22	0.25	0.28	0.31	0.34	0.37	0.42	0.49	0.54	0.58	0.65	0.74	0.85	0.92	1.24
Span (mm) ↓																			
5486	17.61	19.61	22.73	25.71	31.47	33.46	37.82	43.53	48.83	54.47	60.21								
	11.74	13.07	15.16	17.14	20.98	22.31	25.21	27.56	32.55	36.32	40.14								
5791	16.37	18.22	21.14	23.91	29.08	30.95	34.98	40.07	44.96	50.14	55.44								
	10.91	12.15	14.09	15.95	19.39	20.63	21.89	23.36	29.97	33.43	36.96								
6096	15.25	16.98	19.67	22.28	26.94	28.67	32.39	36.95	41.47	46.27	51.15	61.39							
	10.15	11.29	13.07	14.72	17.06	17.93	18.72	19.97	26.50	29.26	32.48	37.59							
6401	14.19	15.81	18.34	20.76	25.01	26.61	30.04	34.19	38.35	42.78	47.29	56.62	61.83						
	8.75	9.73	11.26	12.69	14.71	15.45	16.12	17.22	22.83	25.21	27.99	32.39	35.21						
6706	13.26	14.76	17.13	19.39	23.26	24.73	27.94	31.69	35.55	39.66	43.84	52.33	57.17	61.92					
	7.58	8.44	9.77	11.01	12.75	13.41	13.99	14.94	19.81	21.89	24.28	28.10	30.55	33.21					
7010	12.40	13.80	16.02	18.14	21.67	23.04	26.02	29.43	33.01	36.83	40.71	48.51	52.97	57.39					
	6.62	7.36	8.53	9.61	11.14	11.71	12.22	13.04	17.30	19.11	21.21	24.56	26.69	28.99					
7315	11.61	12.93	14.98	16.98	20.22	21.49	24.29	27.36	30.70	34.28	37.91	45.06	49.21	53.32	61.52				
	5.82	6.47	7.50	8.44	9.79	10.28	10.74	11.47	15.20	16.79	18.63	21.56	23.45	25.48	28.04				
7620	10.87	12.12	14.06	15.93	18.88	20.09	22.69	25.53	28.64	31.97	35.34	41.94	45.81	49.64	56.62	64.57			
	5.15	5.72	6.62	7.45	8.65	9.09	9.48	10.12	13.42	14.82	16.46	19.05	20.70	22.50	24.76	28.15			
7925	10.24	11.39	13.22	14.97	17.70	18.38	19.17	20.48	26.76	29.87	33.02	39.14	42.74	46.29	52.31	59.64			
	4.56	5.07	5.88	6.62	7.67	8.07	8.42	8.98	11.92	13.16	14.60	16.91	18.38	19.97	21.97	24.98			
8230	9.67	10.78	12.49	14.18	16.38	17.70	18.44	19.71	25.05	27.97	30.92	36.57	39.94	43.30	48.46	55.25	63.83		
	4.14	4.62	5.35	6.04	6.84	7.48	7.79	8.33	10.62	11.73	13.03	15.07	16.38	17.80	19.59	22.27	25.37		
8534	9.15	10.21	11.70	13.44	15.23	17.07	17.77	19.00	23.51	26.22	28.99	34.25	37.43	40.54	45.02	51.32	59.29		
	3.77	4.21	4.80	5.51	6.11	6.94	7.23	7.69	9.51	10.50	11.66	13.49	14.68	15.95	17.55	19.94	22.72		
8839	8.55	9.58	10.94	12.71	14.18	15.89	17.16	18.34	22.08	24.64	27.24	32.15	35.11	38.04	41.94	47.80	55.22	61.52	
	3.41	3.82	4.31	5.03	5.50	6.24	6.74	7.16	8.55	9.44	10.47	12.14	13.19	14.33	15.77	17.93	20.43	22.44	
9144	8.02	8.94	10.25	11.87	13.23	14.84	16.59	17.73	20.76	23.17	25.62	30.20	33.01	35.76	39.15	44.62	51.57	57.44	
	3.09	3.44	3.88	4.53	4.96	5.63	6.23	6.68	7.72	8.52	9.45	10.94	11.90	12.93	14.22	16.17	18.43	20.24	
9449	7.54	8.36	9.63	11.12	12.39	13.89	15.68	17.13	19.57	21.80	24.16	28.45	31.08	33.66	36.64	41.78	48.26	53.76	
	2.81	3.10	3.53	4.11	4.48	5.09	5.64	6.10	6.99	7.72	8.56	9.90	10.77	11.70	12.88	14.63	16.68	18.32	
9754	7.09	7.85	9.03	10.42	11.61	13.01	14.88	16.60	18.47	20.44	22.81	26.83	29.24	31.75	34.36	39.18	45.27	50.40	62.65
	2.55	2.83	3.19	3.73	4.08	4.62	5.12	5.54	6.34	7.00	7.77	9.00	9.79	10.63	11.70	13.29	15.14	16.65	20.46
10058	6.69	7.36	8.49	9.80	10.91	12.22	14.02	15.60	17.46	19.22	21.45	25.32	27.46	29.99	32.28	36.82	42.52	47.37	58.85
	2.33	2.58	2.91	3.40	3.70	4.20	4.67	5.04	5.77	6.37	7.07	8.20	8.91	9.69	10.66	12.11	13.80	15.16	18.63
10363	6.31	6.93	7.98	9.20	10.28	11.51	13.22	14.68	16.50	18.08	20.19	23.83	25.87	28.25	30.39	34.67	40.03	44.61	55.42
	2.14	2.34	2.65	3.09	3.38	3.85	4.26	4.61	5.28	5.82	6.46	7.48	8.14	8.84	9.73	11.06	12.60	13.84	17.03
10668	5.96	6.53	7.53	8.68	9.69	10.85	12.49	13.84	15.55	17.04	19.04	22.47	24.38	26.63	28.67	32.70	37.75	42.07	52.27
	1.97	2.15	2.43	2.84	3.09	3.51	3.89	4.21	4.83	5.34	5.92	6.85	7.45	8.09	8.91	10.14	11.54	12.68	15.58
10973	5.66	6.18	7.10	8.20	9.15	10.25	11.82	13.09	14.71	16.11	17.99	21.23	23.04	25.17	27.07	30.88	35.68	39.75	49.38
	1.80	1.98	2.23	2.61	2.84	3.23	3.59	3.88	4.43	4.90	5.44	6.30	6.84	7.44	8.18	9.31	10.60	11.64	14.31

LRFD

METRIC LOAD TABLE/OPEN WEB STEEL JOISTS, LH-SERIES
Based on a 345 MPa Maximum Yield Strength - Loads Shown In Kilonewtons Per Meter (kN/m)

Joist Designation	20LH02	20LH03	20LH04	20LH05	20LH06	20LH07	20LH08	20LH09	20LH10	20LH11	20LH12	20LH13	20LH14	20LH15	20LH16	20LH17	20LH18	20LH19	20LH20
Depth (mm)	508	508	508	508	508	508	508	508	508	508	508	508	508	508	508	508	508	508	508
Approx. Wt. (kN/m)	0.15	0.16	0.18	0.20	0.22	0.25	0.28	0.31	0.34	0.36	0.41	0.50	0.54	0.58	0.66	0.80	0.89	1.01	1.27
Span (mm) ↓																			
6096	15.58	18.09	19.92	23.20	26.83	31.23	33.93	38.76	41.85	50.58	55.92								
	9.92	10.93	13.28	14.88	17.89	20.82	21.70	23.64	25.49	33.72	37.28								
6401	14.66	16.73	18.62	21.67	25.08	29.04	31.56	35.91	38.79	46.86	51.80	62.31							
	8.55	9.42	11.96	12.82	16.72	18.08	18.70	20.37	21.97	31.24	34.54	40.83							
6706	13.71	15.64	17.42	20.28	23.43	27.05	29.39	33.36	36.00	43.51	48.11	57.70	63.01						
	7.42	8.17	10.39	11.13	14.69	15.70	16.22	17.68	19.07	27.50	30.54	35.43	38.52						
7010	12.84	14.66	16.33	18.92	21.99	25.26	27.45	31.04	33.49	40.49	44.75	53.55	58.49	63.36					
	6.47	7.13	9.06	9.71	12.84	13.70	14.17	15.44	16.65	24.03	26.67	30.95	33.65	36.58					
7315	12.05	13.76	15.32	17.74	20.62	23.61	25.65	28.93	31.21	37.73	41.72	49.82	54.42	58.94					
	5.69	6.27	7.96	8.53	11.28	12.03	12.44	13.57	14.63	21.11	23.43	27.18	29.56	32.13					
7620	11.31	12.91	14.40	16.54	19.39	22.12	24.00	27.01	29.15	35.24	38.96	46.42	50.71	54.94	63.78				
	5.03	5.54	7.03	7.54	9.96	10.63	11.00	11.98	12.93	18.65	20.69	24.02	26.10	28.38	31.27				
7925	9.67	10.25	12.56	13.48	17.99	19.22	19.87	21.67	23.37	32.96	36.44	43.35	47.37	51.31	58.90				
	4.46	4.91	6.24	6.69	8.84	9.44	9.76	10.63	11.47	16.54	18.37	21.32	23.17	25.18	27.75				
8230	9.55	10.12	12.39	13.32	17.30	18.49	19.10	20.85	22.50	30.88	34.16	40.55	44.32	48.02	54.56	62.30			
	4.42	4.85	5.92	6.37	8.18	8.74	9.03	9.85	10.56	14.75	16.38	19.00	20.66	22.46	24.75	28.16			
8534	9.42	10.02	12.21	13.17	16.69	17.81	18.43	20.09	21.68	28.99	32.06	38.01	41.54	45.00	50.69	57.87			
	4.34	4.62	5.63	6.07	7.60	8.11	8.39	9.13	9.82	13.20	14.66	17.01	18.50	20.11	22.16	25.21			
8839	8.97	9.89	11.55	13.01	15.81	17.20	17.78	19.39	20.92	27.27	30.16	35.72	39.00	42.26	47.21	53.90	62.27		
	3.99	4.40	5.13	5.76	6.96	7.55	7.82	8.47	9.13	11.87	13.19	15.29	16.63	18.08	19.92	22.67	25.84		
9144	8.49	9.50	10.85	12.49	14.85	16.63	17.17	18.73	20.22	25.67	28.41	33.59	36.70	39.76	44.08	50.31	58.15	64.89	
	3.64	4.08	4.67	5.34	6.23	7.06	7.29	7.90	8.53	10.71	11.89	13.80	15.00	16.31	17.97	20.46	23.32	25.67	
9449	7.98	9.06	10.21	11.90	13.89	15.55	16.63	18.12	19.57	24.22	26.79	31.65	34.58	37.47	41.25	47.10	54.42	60.73	
	3.32	3.76	4.24	4.91	5.63	6.39	6.82	7.39	7.95	9.70	10.77	12.49	13.58	14.76	16.27	18.51	21.11	23.23	
9754	7.53	8.63	9.63	11.22	13.04	14.59	15.80	17.55	18.92	22.86	25.30	29.85	32.63	35.34	38.70	44.17	51.04	56.95	
	3.03	3.47	3.86	4.49	5.12	5.80	6.24	6.93	7.44	8.81	9.77	11.35	12.34	13.41	14.78	16.81	19.17	21.10	
10058	7.10	8.14	9.10	10.59	12.25	13.71	15.03	17.03	18.35	21.58	23.94	28.21	30.83	33.40	36.35	41.50	47.95	53.54	
	2.77	3.18	3.54	4.10	4.67	5.28	5.76	6.37	6.99	8.02	8.90	10.33	11.23	12.21	13.45	15.32	17.46	19.22	
10363	6.71	7.70	8.59	10.02	11.52	12.91	14.31	16.52	17.81	20.31	22.67	26.70	29.08	31.61	34.23	39.06	45.15	50.39	62.75
	2.53	2.91	3.25	3.76	4.26	4.83	5.32	5.82	6.53	7.32	8.14	9.44	10.27	11.16	12.30	13.99	15.95	17.55	21.64
10668	6.36	7.28	8.14	9.50	10.87	12.17	13.58	15.58	17.30	19.14	21.38	25.27	27.45	29.96	32.28	36.86	42.59	47.51	59.19
	2.33	2.68	2.99	3.47	3.89	4.42	4.90	5.34	5.99	6.71	7.45	8.65	9.39	10.21	11.26	12.81	14.60	16.08	19.81
10973	6.01	6.91	7.72	8.98	10.25	11.51	12.87	14.72	16.37	18.09	20.19	23.87	25.91	28.32	30.51	34.82	40.23	44.89	55.90
	2.14	2.46	2.75	3.19	3.59	4.05	4.50	4.90	5.50	6.15	6.84	7.93	8.63	9.38	10.34	11.76	13.41	14.76	18.19
11278	5.73	6.53	7.32	8.53	9.71	10.87	12.21	13.92	15.46	17.11	19.10	22.60	24.53	26.79	28.86	32.93	38.06	42.48	52.90
	1.98	2.27	2.53	2.94	3.29	3.73	4.15	4.50	5.04	5.67	6.30	7.31	7.95	8.63	9.51	10.82	12.34	13.58	16.75
11582	5.44	6.18	6.96	8.11	9.20	10.30	11.60	13.19	14.66	16.21	18.12	21.42	23.24	25.39	27.33	31.21	36.07	40.24	50.13
	1.83	2.08	2.34	2.72	3.05	3.44	3.82	4.15	4.67	5.23	5.80	6.74	7.32	7.96	8.78	9.99	11.39	12.53	15.45
11887	5.18	5.88	6.62	7.72	8.72	9.77	11.00	12.52	13.92	15.38	17.17	20.32	22.06	24.09	25.96	29.61	34.23	38.19	47.56
	1.70	1.94	2.17	2.52	2.80	3.18	3.53	3.85	4.31	4.83	5.37	6.23	6.77	7.36	8.11	9.23	10.53	11.58	14.28
12192	4.91	5.57	6.31	7.35	8.28	9.29	10.47	11.90	13.22	14.62	16.33	19.30	20.94	22.89	24.66	28.15	32.52	36.29	45.19
	1.57	1.79	2.02	2.34	2.59	2.94	3.28	3.56	3.99	4.48	4.97	5.76	6.27	6.81	7.51	8.55	9.74	10.72	13.22

LRFD

METRIC LOAD TABLE/OPEN WEB STEEL JOISTS, LH-SERIES
Based on a 345 MPa Maximum Yield Strength - Loads Shown In Kilonewtons Per Meter (kN/m)

Joist Designation	24LH03	24LH04	24LH05	24LH06	24LH07	24LH08	24LH09	24LH10	24LH11	24LH12	24LH13	24LH14	24LH15	24LH16	24LH17	24LH18	24LH19	24LH20	24LH21
Depth (mm)	610	610	610	610	610	610	610	610	610	610	610	610	610	610	610	610	610	610	610
Approx. Wt. (kN/m)	0.16	0.18	0.19	0.23	0.25	0.26	0.31	0.34	0.36	0.39	0.47	0.51	0.55	0.61	0.72	0.83	0.90	1.15	1.28
Span (mm) ↓																			
7315	14.53	15.81	18.09	22.78	26.57	28.16	36.35	39.05	42.64	48.91	58.84	64.27							
	9.69	10.55	12.06	15.19	17.71	18.78	23.61	25.04	26.21	32.61	39.22	42.84							
7620	13.70	14.90	17.04	21.46	24.95	26.44	34.03	36.55	39.92	45.81	54.96	60.03	65.05						
	8.72	9.93	11.36	14.31	16.63	17.62	20.85	22.10	23.16	30.54	35.68	38.81	42.22						
7925	12.91	14.05	16.08	20.24	23.46	24.86	31.91	34.25	37.43	42.94	51.44	56.18	60.90						
	7.73	9.36	10.14	13.49	14.88	15.80	18.50	19.62	20.54	27.20	31.68	34.45	37.47						
8230	12.18	13.26	15.19	19.13	22.08	23.39	29.96	32.15	35.17	40.33	48.21	52.68	57.09						
	6.90	8.46	9.04	12.06	13.28	14.09	16.50	17.49	18.32	24.25	28.23	30.72	33.42						
8534	11.52	12.53	14.36	18.09	20.75	22.06	28.19	30.25	33.06	37.95	45.28	49.47	53.60	62.05					
	6.17	7.57	8.09	10.81	11.87	12.62	14.78	15.67	16.40	21.71	25.29	27.50	29.91	33.02					
8839	10.90	11.86	13.58	17.11	19.58	20.81	26.61	28.50	31.14	35.74	42.59	46.53	50.43	57.80					
	5.56	6.81	7.28	9.71	10.68	11.35	13.28	14.08	14.75	19.52	22.73	24.73	26.89	29.69					
9144	10.33	11.25	12.87	16.21	18.56	19.67	25.04	26.88	29.34	33.71	40.11	43.82	47.50	53.98	61.70				
	5.00	6.14	6.56	8.77	9.64	10.24	11.98	12.71	13.30	17.61	20.51	22.31	24.26	26.79	30.55				
9449	9.80	10.65	12.14	15.38	17.51	18.60	23.72	25.39	27.67	31.84	37.84	41.34	44.80	50.52	57.74				
	4.53	5.56	5.95	7.93	8.72	9.26	10.85	11.51	12.05	15.95	18.56	20.19	21.96	24.25	27.65				
9754	9.29	10.11	11.39	14.59	16.37	17.64	22.32	23.46	25.52	30.12	35.74	39.06	42.33	47.37	54.15	62.60			
	4.11	5.04	5.39	7.20	7.92	8.42	9.85	10.44	10.94	14.49	16.87	18.34	19.94	22.02	25.11	28.66			
10058	8.84	9.63	10.77	13.89	15.45	16.72	20.89	21.77	23.07	28.54	33.81	36.96	40.06	44.52	50.88	58.84			
	3.75	4.59	4.91	6.56	7.22	7.66	8.97	9.51	9.96	13.19	15.36	16.71	18.16	20.06	22.88	26.12			
10363	7.48	9.16	9.82	13.22	14.55	15.46	18.21	19.30	20.28	27.05	32.04	35.02	37.95	41.91	47.91	55.38	61.99		
	3.42	4.20	4.49	5.99	6.59	7.00	8.20	8.69	9.10	12.05	14.03	15.26	16.60	18.32	20.89	23.86	26.32		
10668	7.41	8.71	9.76	12.66	13.96	14.81	17.68	18.73	19.70	25.69	30.39	33.20	35.98	39.53	45.18	52.23	58.46		
	3.29	3.86	4.33	5.57	6.14	6.52	7.73	8.15	8.58	11.03	12.85	13.98	15.20	16.78	19.14	21.84	24.12		
10973	7.35	8.28	9.63	12.14	13.41	14.19	17.17	18.21	19.14	24.40	28.86	31.53	34.19	37.34	42.68	49.35	55.22		
	3.18	3.59	4.15	5.19	5.73	6.07	7.31	7.70	8.09	10.14	11.80	12.84	13.96	15.41	17.58	20.06	22.15		
11278	7.06	7.88	9.16	11.60	12.87	13.61	16.72	17.70	18.62	23.21	27.45	29.99	32.50	35.33	40.38	46.68	52.24	65.27	
	2.97	3.31	3.85	4.83	5.35	5.66	6.71	7.29	7.66	9.32	10.85	11.82	12.85	14.18	16.18	18.46	20.38	25.23	
11582	6.71	7.50	8.72	11.03	12.36	13.06	15.99	17.24	18.14	22.08	26.10	28.41	30.92	33.49	38.27	44.23	49.51	61.86	
	2.74	3.06	3.56	4.46	5.00	5.28	6.18	6.91	7.26	8.61	10.02	10.90	11.85	13.09	14.92	17.03	18.79	23.27	
11887	6.40	7.15	8.31	10.50	11.83	12.52	15.23	16.81	17.65	20.94	24.83	26.96	29.46	31.75	36.30	41.98	46.99	58.71	65.51
	2.55	2.84	3.29	4.14	4.67	4.93	5.73	6.40	6.88	7.95	9.26	10.06	10.96	12.09	13.79	15.74	17.38	21.51	23.80
12192	6.10	6.82	7.93	9.99	11.29	11.92	14.50	16.12	17.22	19.92	23.59	25.61	27.99	30.18	34.51	39.89	44.65	55.77	62.25
	2.36	2.65	3.06	3.83	4.33	4.58	5.29	5.92	6.55	7.36	8.58	9.32	10.14	11.20	12.78	14.57	16.09	19.92	22.03
12497	5.83	6.52	7.58	9.55	10.74	11.38	13.83	15.36	16.81	18.92	22.46	24.35	26.63	28.72	32.83	37.95	42.48	53.06	59.23
	2.21	2.46	2.86	3.57	4.02	4.26	4.91	5.51	6.10	6.82	7.95	8.65	9.41	10.39	11.86	13.52	14.94	18.49	20.46
12802	5.57	6.23	7.23	9.12	10.24	10.87	13.17	14.62	16.06	18.03	21.38	23.21	25.36	27.36	31.27	36.16	40.46	50.53	56.43
	2.05	2.30	2.65	3.32	3.75	3.96	4.56	5.12	5.66	6.34	7.39	8.05	8.75	9.66	11.01	12.57	13.89	17.19	19.01
13106	5.34	5.96	6.93	8.72	9.76	10.39	12.56	13.93	15.33	17.20	20.40	22.12	24.18	26.09	29.82	34.47	38.58	48.20	53.80
	1.92	2.15	2.49	3.07	3.48	3.70	4.26	4.75	5.26	5.92	6.88	7.50	8.15	9.00	10.27	11.71	12.93	16.00	17.71
13411	5.12	5.73	6.65	8.33	9.32	9.95	11.99	13.30	14.68	16.43	19.48	21.14	23.08	24.91	28.47	32.92	36.83	46.02	51.37
	1.80	2.01	2.33	2.87	3.25	3.47	3.96	4.43	4.91	5.51	6.42	6.99	7.60	8.39	9.57	10.93	12.06	14.92	16.52
13716	4.90	5.48	6.36	7.96	8.90	9.51	11.47	12.74	14.05	15.68	18.60	20.19	22.08	23.81	27.20	31.44	35.21	43.97	49.09
	1.69	1.89	2.18	2.68	3.03	3.23	3.70	4.15	4.59	5.15	6.01	6.53	7.10	7.85	8.94	10.21	11.26	13.95	15.44
14021	4.69	5.26	6.12	7.61	8.50	9.12	10.96	12.17	13.48	15.01	17.78	19.32	21.11	22.78	26.05	30.09	33.68	42.07	46.97
	1.59	1.78	2.05	2.51	2.84	3.03	3.47	3.88	4.29	4.83	5.61	6.11	6.65	7.34	8.37	9.55	10.55	13.06	14.44
14326	4.52	5.04	5.88	7.31	8.15	8.75	10.50	11.66	12.91	14.37	17.04	18.49	20.22	21.80	24.92	28.82	32.26	40.29	44.97
	1.48	1.66	1.92	2.34	2.65	2.86	3.25	3.63	4.02	4.52	5.26	5.73	6.23	6.87	7.85	8.96	9.88	12.22	13.52
14630	4.34	4.85	5.64	7.00	7.80	8.40	10.06	11.17	12.40	13.79	16.34	17.73	19.39	20.89	23.90	27.62	30.90	38.61	43.09
	1.40	1.56	1.80	2.21	2.49	2.68	3.05	3.41	3.77	4.24	4.94	5.37	5.85	6.45	7.35	8.40	9.28	11.48	12.69

LRFD

METRIC LOAD TABLE/OPEN WEB STEEL JOISTS, LH-SERIES
Based on a 345 MPa Maximum Yield Strength - Loads Shown In Kilonewtons Per Meter (kN/m)

Joist Designation	28LH05	28LH06	28LH07	28LH08	28LH09	28LH10	28LH11	28LH12	28LH13	28LH14	28LH15	28LH16	28LH17	28LH18	28LH19	28LH20	28LH21	28LH22	28LH23
Depth (mm)	711	711	711	711	711	711	711	711	711	711	711	711	711	711	711	711	711	711	711
Approx. Wt. (kN/m)	0.19	0.23	0.25	0.26	0.31	0.34	0.36	0.39	0.44	0.51	0.55	0.61	0.72	0.82	0.92	1.15	1.28	1.49	1.62
Span (mm) ↓																			
8534	13.70	18.18	21.19	22.67	29.37	31.47	34.36	40.24	44.52	53.82	58.33								
	9.13	12.12	14.12	15.11	19.58	20.98	22.91	26.83	28.37	35.88	38.89								
8839	13.04	17.30	20.13	21.51	27.81	29.81	32.54	38.10	42.07	50.87	55.12	64.84							
	8.69	11.54	13.42	14.34	18.54	19.87	21.70	24.43	25.49	33.91	36.74	41.43							
9144	12.43	16.52	19.13	20.44	26.35	28.25	30.83	36.13	39.79	48.13	52.15	61.25							
	8.28	11.01	12.75	13.63	17.30	18.84	20.13	22.03	22.99	31.08	33.81	37.37							
9449	11.86	15.76	18.18	19.45	25.01	26.80	29.26	34.28	37.69	45.59	49.40	57.93							
	7.90	10.50	11.93	12.74	15.67	17.06	18.22	19.94	20.82	28.13	30.61	33.84							
9754	11.31	15.03	17.30	18.51	23.74	25.45	27.80	32.57	35.74	43.22	46.84	54.87	63.22						
	7.28	9.60	10.84	11.57	14.22	15.49	16.54	18.12	18.91	25.55	27.80	30.73	35.11						
10058	10.81	14.36	16.47	17.64	22.59	24.21	26.41	30.95	33.93	41.03	44.48	52.02	59.93						
	6.62	8.75	9.88	10.53	12.95	14.11	15.07	16.50	17.23	23.27	25.32	27.99	31.98						
10363	10.33	13.71	15.71	16.81	21.49	23.02	25.14	29.46	32.26	39.00	42.26	49.40	56.74	64.27					
	6.05	7.99	9.01	9.63	11.83	12.88	13.77	15.07	15.74	21.26	23.13	25.56	29.21	33.36					
10668	9.86	13.13	14.98	16.03	20.46	21.93	23.94	28.06	30.69	37.09	40.20	46.77	53.51	61.09					
	5.54	7.32	8.26	8.81	10.84	11.80	12.62	13.80	14.41	19.48	21.19	23.42	26.76	30.55					
10973	9.45	12.56	14.31	15.32	19.52	20.92	22.82	26.76	29.21	35.33	38.30	44.17	50.56	58.11	65.55				
	5.09	6.72	7.58	8.09	9.95	10.84	11.58	12.68	13.23	17.89	19.45	21.51	24.57	28.06	31.04				
11278	9.06	12.03	13.67	14.63	18.62	19.96	21.80	25.52	27.84	33.68	36.51	41.81	47.85	55.31	62.00				
	4.68	6.18	6.97	7.45	9.16	9.98	10.66	11.67	12.18	16.46	17.90	19.78	22.62	25.83	28.57				
11582	8.66	11.52	13.09	14.01	17.78	19.05	20.81	24.37	26.57	32.13	34.82	39.62	45.32	52.42	58.76				
	4.31	5.70	6.43	6.87	8.44	9.20	9.83	10.77	11.23	15.17	16.52	18.25	20.85	23.81	26.35				
11887	8.31	11.04	12.53	13.39	17.00	18.22	19.89	23.30	25.39	30.69	33.27	37.57	43.00	49.75	55.77				
	3.99	5.28	5.95	6.34	7.82	8.50	9.09	9.95	10.39	14.03	15.26	16.88	19.27	22.02	24.37				
12192	7.98	10.60	12.01	12.84	16.25	17.43	19.04	22.29	24.25	29.33	31.80	35.72	40.86	47.25	52.99				
	3.70	4.88	5.51	5.88	7.23	7.88	8.42	9.22	9.61	13.00	14.14	15.63	17.86	20.40	22.56				
12497	7.66	10.20	11.51	12.30	15.49	16.69	18.22	21.36	23.20	28.06	30.42	33.98	38.89	44.97	50.40	63.13			
	3.44	4.53	5.12	5.45	6.71	7.31	7.82	8.55	8.93	12.06	13.11	14.50	16.57	18.92	20.94	26.00			
12802	7.36	9.80	11.04	11.82	14.59	15.95	17.07	18.75	19.58	26.88	29.12	32.36	37.03	42.83	48.02	60.12			
	3.19	4.21	4.75	5.07	6.24	6.80	7.26	7.95	8.30	11.22	12.20	13.48	15.41	17.60	19.46	24.18			
13106	7.06	9.38	10.59	11.31	13.98	15.41	16.68	18.31	19.13	25.75	27.90	30.86	35.33	40.84	45.79	57.35	64.02		
	2.99	3.94	4.45	4.74	5.83	6.40	6.93	7.58	7.92	10.44	11.36	12.56	14.34	16.38	18.14	22.51	24.92		
13411	6.78	9.01	10.15	10.85	13.39	14.85	16.11	17.90	18.69	24.70	26.76	29.46	33.72	39.00	43.73	54.74	61.13		
	2.80	3.69	4.15	4.45	5.47	6.04	6.53	7.23	7.55	9.74	10.59	11.71	13.38	15.29	16.91	21.00	23.24		
13716	6.49	8.63	9.73	10.39	12.82	14.24	15.55	17.51	18.27	23.70	25.69	28.16	32.23	37.27	41.78	52.31	58.41	64.27	
	2.62	3.47	3.89	4.15	5.12	5.66	6.17	6.94	7.22	9.10	9.90	10.94	12.50	14.28	15.80	19.62	21.73	24.63	
14021	6.26	8.28	9.34	9.98	12.31	13.67	14.92	17.11	17.86	22.76	24.69	26.94	30.83	35.65	39.98	50.05	55.88	61.46	
	2.46	3.25	3.66	3.91	4.80	5.31	5.79	6.62	6.88	8.52	9.26	10.24	11.70	13.36	14.78	18.35	20.32	23.04	
14326	6.01	7.96	8.97	9.58	11.82	13.13	14.33	16.76	17.48	21.86	23.72	25.80	29.52	34.14	38.27	47.94	53.51	58.85	
	2.32	3.05	3.44	3.67	4.50	4.99	5.44	6.34	6.59	7.98	8.68	9.60	10.96	12.52	13.86	17.20	19.04	21.59	
14630	5.79	7.66	8.62	9.19	11.35	12.60	13.76	16.12	17.11	20.97	22.82	24.73	28.29	32.71	36.68	45.94	51.31	56.43	64.57
	2.18	2.87	3.23	3.44	4.24	4.69	5.12	5.95	6.31	7.48	8.14	9.00	10.28	11.74	13.00	16.14	17.87	20.27	22.03
14935	5.57	7.36	8.28	8.81	10.91	12.12	13.23	15.51	16.76	20.11	21.97	23.72	27.14	31.39	35.20	44.08	49.21	54.12	62.08
	2.07	2.71	3.05	3.23	3.99	4.42	4.83	5.58	6.05	7.03	7.66	8.46	9.67	11.04	12.21	15.17	16.79	19.04	20.70
15240	5.35	7.09	7.98	8.46	10.52	11.66	12.74	14.92	16.43	19.30	21.10	22.78	26.06	30.13	33.79	42.30	47.25	51.96	59.68
	1.94	2.55	2.87	3.05	3.76	4.15	4.55	5.26	5.77	6.62	7.19	7.96	9.09	10.39	11.49	14.27	15.80	17.92	19.48
15545	5.18	6.84	7.70	8.11	10.12	11.22	12.27	14.36	15.80	18.56	20.27	21.89	25.04	28.95	32.48	40.67	45.40	49.92	57.45
	1.83	2.42	2.71	2.86	3.54	3.92	4.29	4.96	5.44	6.23	6.78	7.50	8.56	9.77	10.82	13.44	14.88	16.87	18.34
15850	4.99	6.58	7.41	7.80	9.76	10.82	11.82	13.83	15.19	17.83	19.49	21.05	24.09	27.85	31.23	39.09	43.66	48.02	55.35
	1.73	2.27	2.56	2.69	3.32	3.72	4.05	4.68	5.13	5.88	6.39	7.07	8.08	9.22	10.21	12.68	14.03	15.90	17.30
16154	4.81	6.36	7.15	7.53	9.41	10.43	11.39	13.32	14.62	17.16	18.75	20.24	23.17	26.80	30.04	37.62	42.03	46.20	53.34
	1.64	2.15	2.42	2.55	3.15	3.51	3.83	4.42	4.84	5.54	6.04	6.66	7.63	8.71	9.63	11.96	13.25	15.01	16.33
16459	4.65	6.14	6.97	7.23	9.07	10.06	10.98	12.84	14.06	16.52	18.08	19.49	22.32	25.83	28.93	36.25	40.46	44.49	51.45
	1.56	2.04	2.30	2.40	2.97	3.32	3.63	4.15	4.58	5.23	5.70	6.30	7.20	8.23	9.10	11.31	12.52	14.19	15.44
16764	4.50	5.92	6.66	6.97	8.77	9.71	10.60	12.39	13.57	15.93	17.42	18.79	21.51	24.88	27.90	34.93	39.00	42.90	49.66
	1.48	1.94	2.18	2.27	2.81	3.13	3.44	3.94	4.33	4.96	5.39	5.96	6.81	7.79	8.62	10.69	11.85	13.44	14.60
17069	4.34	5.73	6.45	6.74	8.46	9.38	10.24	11.95	13.09	15.36	16.78	18.12	20.75	23.99	26.89	33.68	37.60	41.37	47.95
	1.41	1.83	2.07	2.15	2.67	2.97	3.25	3.73	4.10	4.69	5.10	5.64	6.46	7.36	8.15	10.14	11.22	12.72	13.83

LRFD

METRIC LOAD TABLE/OPEN WEB STEEL JOISTS, LH-SERIES
Based on a 345 MPa Maximum Yield Strength - Loads Shown In Kilonewtons Per Meter (kN/m)

Joist Designation	32LH06	32LH07	32LH08	32LH09	32LH10	32LH11	32LH12	32LH13	32LH14	32LH15	32LH16	32LH17	32LH18	32LH19	32LH20	32LH21	32LH22	32LH23	32LH24
Depth (mm)	813	813	813	813	813	813	813	813	813	813	813	813	813	813	813	813	813	813	813
Approx. Wt. (kN/m)	0.20	0.23	0.25	0.31	0.31	0.35	0.39	0.44	0.48	0.51	0.61	0.72	0.82	0.90	1.14	1.27	1.47	1.61	1.81
Span (mm) ↓																			
9754	14.33	16.08	18.14	24.05	25.91	28.37	33.31	39.15	41.94	44.87	58.90								
	9.55	10.72	12.09	16.03	17.27	18.91	22.21	26.10	27.96	29.91	39.27								
10058	13.76	15.42	17.35	22.95	24.75	27.10	31.80	37.31	39.98	42.77	56.05	64.59							
	9.17	10.28	11.57	15.30	16.50	18.06	21.20	24.88	26.66	27.29	37.25	42.61							
10363	13.23	14.84	16.63	21.94	23.64	25.88	30.38	35.60	38.13	40.80	53.41	61.55							
	8.82	9.89	11.09	14.63	15.76	17.26	20.25	23.42	24.12	24.92	34.03	38.93							
10668	12.71	14.24	15.93	20.98	22.60	24.75	29.07	33.98	36.39	38.93	50.91	58.68							
	8.47	9.50	10.62	13.68	15.07	16.50	19.30	21.45	22.09	22.82	31.17	35.65							
10973	12.22	13.70	15.27	20.06	21.64	23.68	27.81	32.48	34.77	37.21	48.59	55.99	63.26						
	8.15	9.13	10.05	12.56	13.86	15.17	17.73	19.70	20.30	20.97	28.61	32.74	37.40						
11278	11.74	13.17	14.66	19.22	20.72	22.67	26.63	31.05	33.24	35.59	46.40	53.47	60.41						
	7.64	8.52	9.25	11.57	12.76	13.96	16.31	18.14	18.68	19.29	26.34	30.13	34.42						
11582	11.31	12.69	14.06	18.43	19.84	21.73	25.52	29.72	31.82	34.03	44.35	51.10	57.74						
	7.06	7.86	8.53	10.66	11.77	12.88	15.06	16.72	17.23	17.80	24.29	27.80	31.75						
11887	10.90	12.21	13.49	17.65	19.04	20.84	24.47	28.45	30.47	32.61	42.42	48.90	55.25	63.26					
	6.52	7.26	7.88	9.86	10.88	11.90	13.92	15.46	15.92	16.44	22.46	25.69	29.36	32.54					
12192	10.47	11.77	12.97	16.94	18.25	19.97	23.48	27.27	29.20	31.23	40.62	46.81	52.88	60.47					
	6.04	6.72	7.31	9.13	10.08	11.03	12.88	14.31	14.75	15.23	20.81	23.80	27.18	30.15					
12497	10.11	11.33	12.47	16.25	17.52	19.19	22.54	26.15	27.99	29.96	38.92	44.84	50.67	57.87					
	5.60	6.24	6.78	8.47	9.35	10.23	11.96	13.29	13.68	14.14	19.30	22.08	25.23	27.97					
12802	9.73	10.91	12.01	15.63	16.85	18.43	21.64	25.08	26.88	28.76	37.31	42.81	48.59	55.42					
	5.21	5.80	6.30	7.88	8.69	9.51	11.12	12.36	12.72	13.14	17.95	20.53	23.46	26.00					
13106	9.41	10.55	11.55	15.03	16.19	17.73	20.81	24.09	25.80	27.62	35.65	40.81	46.62	53.01					
	4.85	5.41	5.86	7.34	8.09	8.85	10.36	11.51	11.85	12.24	16.72	19.11	21.84	24.22					
13411	9.06	10.17	11.13	14.44	15.58	17.04	20.02	23.16	24.79	26.53	34.03	38.98	44.78	50.61	63.48				
	4.52	5.04	5.47	6.84	7.55	8.27	9.66	10.74	11.06	11.42	15.60	17.83	20.38	22.59	28.12				
13716	8.75	9.82	10.72	13.92	14.98	16.41	19.26	22.25	23.83	25.52	32.52	37.25	43.03	48.37	60.65				
	4.23	4.71	5.12	6.40	7.06	7.72	9.03	10.02	10.33	10.66	14.56	16.66	19.04	21.11	26.28				
14021	8.44	9.47	10.34	13.39	14.44	15.80	18.56	21.42	22.94	24.56	31.12	35.63	41.21	46.27	58.02	64.81			
	3.95	4.40	4.78	5.98	6.61	7.22	8.44	9.38	9.67	9.98	13.63	15.60	17.81	19.76	24.59	27.23			
14326	8.15	9.16	9.98	12.91	13.92	15.23	17.87	20.63	22.08	23.64	29.78	34.12	39.46	44.32	55.57	62.05			
	3.70	4.13	4.48	5.61	6.18	6.77	7.90	8.80	9.06	9.35	12.76	14.60	16.69	18.50	23.04	25.52			
14630	7.89	8.85	9.63	12.39	13.41	14.68	17.24	19.87	21.27	22.76	28.56	32.70	37.84	42.46	53.25	59.49	65.45		
	3.48	3.88	4.20	5.26	5.80	6.36	7.42	8.26	8.50	8.78	11.98	13.71	15.67	17.36	21.62	23.94	27.17		
14935	7.63	8.55	9.29	11.90	12.93	14.15	16.63	19.14	20.50	21.94	27.40	31.39	36.29	40.76	51.09	57.06	62.79		
	3.26	3.64	3.95	4.94	5.45	5.96	6.97	7.74	7.98	8.24	11.26	12.88	14.72	16.31	20.31	22.50	25.53		
15240	7.39	8.28	8.98	11.29	12.49	13.67	16.06	17.87	18.44	19.04	26.31	30.12	34.85	39.11	49.05	54.78	60.28		
	3.07	3.42	3.72	4.65	5.13	5.61	6.56	7.29	7.51	7.76	10.59	12.12	13.84	15.35	19.11	21.17	24.02		
15545	7.13	8.01	8.68	10.90	12.03	13.17	15.58	17.52	18.08	18.66	25.27	28.95	33.49	37.57	47.15	52.64	57.93	65.33	
	2.90	3.25	3.53	4.40	4.84	5.29	6.24	7.00	7.22	7.45	9.98	11.41	13.04	14.46	18.00	19.93	22.62	24.64	
15850	6.88	7.72	8.37	10.50	11.61	12.69	15.06	17.17	17.73	18.31	24.31	27.84	32.19	36.16	45.32	50.62	55.70	62.97	
	2.75	3.07	3.34	4.15	4.59	5.00	5.92	6.72	6.94	7.18	9.41	10.77	12.30	13.64	16.97	18.79	21.33	23.24	
16154	6.65	7.45	8.07	10.12	11.20	12.25	14.53	16.87	17.39	17.96	23.39	26.79	30.99	34.77	43.62	48.72	53.60	60.73	63.93
	2.61	2.91	3.15	3.94	4.33	4.74	5.60	6.47	6.68	6.90	8.88	10.17	11.61	12.87	16.02	17.74	20.13	21.94	23.75
16459	6.43	7.19	7.80	9.77	10.82	11.83	14.02	16.24	17.07	17.61	22.51	25.80	29.85	33.50	42.03	46.93	51.63	58.63	61.57
	2.46	2.75	2.99	3.73	4.11	4.49	5.31	6.12	6.42	6.62	8.39	9.60	10.97	12.17	15.14	16.78	19.04	20.73	22.46
16764	6.21	6.96	7.54	9.45	10.46	11.42	13.54	15.64	16.76	17.30	21.71	24.86	28.76	32.28	40.49	45.22	49.75	56.62	59.33
	2.34	2.61	2.83	3.54	3.89	4.26	5.03	5.79	6.08	6.39	7.93	9.09	10.39	11.51	14.33	15.87	18.00	19.61	21.24
17069	6.01	6.74	7.28	9.15	10.11	11.04	13.09	15.10	16.15	16.98	20.94	23.99	27.72	31.14	39.05	43.62	47.98	54.69	57.22
	2.23	2.48	2.68	3.35	3.70	4.04	4.77	5.48	5.76	6.15	7.53	8.61	9.83	10.90	13.57	15.03	17.06	18.57	20.12
17374	5.82	6.52	7.04	8.84	9.73	10.68	12.65	14.57	15.60	16.69	20.19	23.13	26.76	30.04	37.69	42.08	46.32	52.88	55.22
	2.11	2.36	2.55	3.19	3.50	3.83	4.53	5.16	5.45	5.93	7.13	8.15	9.32	10.33	12.87	14.25	16.17	17.61	19.07
17678	5.61	6.30	6.82	8.55	9.41	10.34	12.22	14.06	15.06	16.41	19.49	22.34	25.84	29.02	36.38	40.64	44.71	51.15	53.32
	2.01	2.24	2.43	3.03	3.32	3.66	4.30	4.90	5.18	5.73	6.77	7.74	8.84	9.80	12.21	13.52	15.33	16.71	18.09
17983	5.44	6.10	6.61	8.28	9.10	10.02	11.83	13.58	14.55	15.86	18.84	21.58	24.97	28.03	35.15	39.27	43.21	49.51	51.53
	1.91	2.13	2.32	2.86	3.16	3.48	4.10	4.65	4.91	5.45	6.42	7.35	8.40	9.31	11.58	12.84	14.57	15.87	17.19
18288	5.29	5.92	6.40	8.02	8.80	9.69	11.47	13.13	14.06	15.33	18.22	20.88	24.13	27.10	33.98	37.95	41.76	47.94	49.79
	1.82	2.04	2.20	2.75	3.00	3.31	3.89	4.43	4.68	5.18	6.11	6.99	7.98	8.85	11.01	12.20	13.84	15.09	16.34
18593	5.12	5.73	6.21	7.79	8.50	9.38	11.12	12.71	13.61	14.84	17.61	20.18	23.35	26.22	32.88	36.73	40.41	46.45	48.17
	1.73	1.94	2.10	2.62	2.86	3.15	3.72	4.20	4.43	4.93	5.80	6.65	7.60	8.42	10.47	11.61	13.17	14.36	15.54
18898	4.96	5.56	6.01	7.54	8.23	9.10	10.77	12.30	13.17	14.36	17.04	19.54	22.60	25.36	31.82	35.55	39.09	45.02	46.62
	1.66	1.85	1.99	2.51	2.71	3.00	3.54	4.01	4.23	4.69	5.53	6.33	7.23	8.01	9.98	11.06	12.55	13.67	14.79
19202	4.81	5.39	5.83	7.32	7.96	8.81	10.43	11.90	12.75	13.89	16.52	18.91	21.89	24.57	30.82	34.41	37.87	43.65	45.15
	1.57	1.76	1.91	2.39	2.59	2.86	3.38	3.82	4.02	4.46	5.26	6.02	6.88	7.64	9.51	10.53	11.95	13.01	14.09
19507	4.68	5.25	5.66	7.10	7.72	8.53	10.12	11.52	12.34	13.48	15.99	18.31	21.20	23.81	29.85	33.33	36.68	42.33	43.73
	1.51	1.69	1.82	2.29	2.46	2.72	3.22	3.63	3.85	4.26	5.02	5.74	6.56	7.28	9.07	10.04	11.39	12.41	13.45

LRFD

METRIC LOAD TABLE/OPEN WEB STEEL JOISTS, LH-SERIES
Based on a 345 MPa Maximum Yield Strength - Loads Shown In Kilonewtons Per Meter (kN/m)

Joist Designation	36LH07	36LH08	36LH09	36LH10	36LH11	36LH12	36LH13	36LH14	36LH15	36LH16	36LH17	36LH18	36LH19	36LH20	36LH21	36LH22	36LH23	36LH24	36LH25
Depth (mm)	914	914	914	914	914	914	914	914	914	914	914	914	914	914	914	914	914	914	914
Approx. Wt. (kN/m)	0.23	0.26	0.31	0.31	0.34	0.36	0.44	0.53	0.53	0.64	0.72	0.85	0.93	1.18	1.34	1.46	1.78	1.90	2.17
Span (mm) ↓																			
10973	12.74	14.62	18.62	22.02	23.29	27.85	33.55	36.96	40.01	51.23	59.07								
	8.49	9.74	12.41	14.68	15.52	18.57	22.37	24.64	26.67	34.16	39.38								
11278	12.30	14.09	17.95	21.16	22.37	26.79	32.19	35.47	38.39	49.09	56.60	63.93							
	8.20	9.39	11.96	14.11	14.91	17.86	21.46	23.65	25.59	32.73	37.73	42.62							
11582	11.87	13.57	17.07	20.32	21.51	25.75	30.90	34.06	36.86	47.06	54.26	61.29							
	7.92	9.04	11.38	13.55	14.34	17.17	20.60	22.70	24.57	31.21	35.74	40.84							
11887	11.48	13.09	16.68	19.57	20.70	24.78	29.69	32.70	35.39	45.15	52.05	58.81							
	7.66	8.72	11.12	13.04	13.80	16.52	19.80	21.80	23.23	28.85	33.04	37.75							
12192	11.12	12.60	16.08	18.82	19.92	23.86	28.54	31.43	34.01	43.34	49.96	56.44	65.36						
	7.41	8.40	10.72	12.24	13.28	15.87	18.60	20.44	21.52	26.72	30.60	34.96	38.83						
12497	10.74	12.17	15.54	18.14	19.17	22.95	27.45	30.22	32.70	41.63	47.99	54.21	62.66						
	7.16	8.07	10.27	11.35	12.36	14.72	17.26	18.97	19.97	24.79	28.39	32.45	36.03						
12802	10.39	11.74	14.98	17.46	18.47	22.12	26.40	29.08	31.47	40.01	46.14	52.11	60.15						
	6.84	7.50	9.55	10.56	11.48	13.68	16.05	17.64	18.56	23.05	26.40	30.18	33.49						
13106	10.06	11.33	14.46	16.82	17.81	21.32	25.40	27.99	30.29	38.48	44.36	50.13	57.74						
	6.37	6.99	8.90	9.83	10.69	12.75	14.95	16.43	17.29	21.46	24.59	28.10	31.20						
13411	9.73	10.94	13.98	16.24	17.17	20.57	24.47	26.96	29.17	37.03	42.68	48.24	55.48						
	5.95	6.52	8.30	9.17	9.98	11.89	13.95	15.32	16.14	20.02	22.94	26.21	29.10						
13716	9.42	10.59	13.52	15.67	16.56	19.84	23.59	25.97	28.12	35.65	41.11	46.45	53.34						
	5.56	6.08	7.76	8.56	9.32	11.12	13.03	14.31	15.07	18.70	21.42	24.48	27.18						
14021	9.12	10.21	13.06	15.11	15.99	19.14	22.73	25.05	27.11	34.33	39.59	44.74	51.32	64.54					
	5.19	5.70	7.25	8.02	8.72	10.40	12.20	13.39	14.11	17.51	20.05	22.91	25.45	31.72					
14326	8.84	9.89	12.65	14.59	15.45	18.49	21.93	24.16	26.15	33.09	38.17	43.12	49.42	62.14					
	4.87	5.34	6.80	7.51	8.17	9.74	11.42	12.55	13.22	16.40	18.78	21.48	23.84	29.74					
14630	8.58	9.55	12.22	14.11	14.92	17.86	21.16	23.33	25.23	31.93	36.82	41.59	47.60	59.86					
	4.56	5.02	6.37	7.04	7.67	9.15	10.72	11.77	12.40	15.39	17.62	20.15	22.37	27.90					
14935	8.31	9.25	11.83	13.63	14.41	17.26	20.44	22.51	24.38	30.79	35.52	40.14	45.88	57.70	63.52				
	4.29	4.71	5.99	6.62	7.20	8.59	10.06	11.07	11.66	14.46	16.56	18.92	21.01	26.22	29.05				
15240	8.05	8.97	11.47	13.17	13.93	16.69	19.76	21.75	23.55	29.74	34.19	38.76	44.26	55.64	61.26				
	4.04	4.43	5.64	6.23	6.78	8.08	9.48	10.42	10.96	13.61	15.58	17.81	19.77	24.66	27.33				
15545	7.80	8.68	11.12	12.75	13.48	16.15	19.08	21.02	22.76	28.67	32.85	37.43	42.70	53.63	59.11				
	3.80	4.17	5.31	5.88	6.39	7.61	8.93	9.80	10.33	12.81	14.68	16.78	18.62	23.23	25.74				
15850	7.58	8.40	10.77	12.34	13.06	15.64	18.47	20.35	22.02	27.55	31.58	36.17	41.06	51.57	57.09	63.39			
	3.59	3.94	5.00	5.54	6.02	7.18	8.42	9.25	9.73	12.08	13.84	15.81	17.57	21.90	24.28	27.56			
16154	7.36	8.15	10.43	11.95	12.65	15.14	17.86	19.48	21.29	26.53	30.39	34.98	39.53	49.61	55.13	61.00			
	3.38	3.72	4.72	5.22	5.69	6.78	7.95	8.74	9.19	11.41	13.07	14.94	16.57	20.67	22.92	26.02			
16459	7.15	7.89	10.11	11.52	12.22	14.66	17.29	19.05	20.62	25.53	29.28	33.84	38.06	47.78	53.29	58.75	65.16		
	3.21	3.51	4.46	4.94	5.37	6.40	7.51	8.26	8.69	10.78	12.34	14.11	15.67	19.55	21.65	24.59	26.82		
16764	6.96	7.66	9.82	11.13	11.86	14.22	16.73	18.44	19.96	24.61	28.21	32.63	36.68	46.05	51.45	56.62	63.00		
	3.03	3.32	4.23	4.67	5.09	6.07	7.10	7.80	8.21	10.20	11.68	13.35	14.82	18.49	20.48	23.26	25.37		
17069	6.75	7.44	9.51	10.74	11.51	13.79	16.21	17.87	19.35	23.74	27.20	31.47	35.37	44.40	49.61	54.61	60.91	65.24	
	2.87	3.15	4.01	4.42	4.81	5.74	6.72	7.39	7.79	9.66	11.06	12.65	14.03	17.51	19.40	22.03	24.03	26.07	
17374	6.56	7.22	9.25	10.37	11.16	13.36	15.71	17.33	18.75	22.91	26.26	30.38	34.14	42.86	47.89	52.71	58.93	62.97	
	2.72	2.97	3.79	4.20	4.56	5.44	6.37	7.01	7.38	9.16	10.49	11.99	13.30	16.60	18.40	20.88	22.79	24.72	
17678	6.39	7.01	8.98	9.93	10.82	12.97	15.25	16.81	17.70	22.12	25.34	29.33	32.96	41.38	46.23	50.88	57.04	60.81	
	2.58	2.83	3.60	3.98	4.33	5.16	6.05	6.65	7.00	8.69	9.95	11.38	12.63	15.76	17.45	19.81	21.62	23.45	
17983	6.18	6.80	8.71	9.63	10.50	12.57	14.76	16.52	17.39	21.38	24.48	28.34	31.84	39.98	44.67	49.16	55.25	58.75	
	2.45	2.69	3.42	3.79	4.13	4.93	5.76	6.33	6.77	8.26	9.45	10.79	11.99	14.95	16.57	18.82	20.53	22.27	
18288	5.99	6.61	8.44	9.32	10.17	12.18	14.31	15.95	17.08	20.66	23.68	27.40	30.79	38.65	43.18	47.54	53.54	56.79	
	2.33	2.56	3.26	3.61	3.92	4.69	5.48	6.01	6.53	7.85	8.98	10.27	11.39	14.22	15.76	17.89	19.52	21.17	
18593	5.82	6.40	8.18	9.03	9.86	11.82	13.87	15.45	16.82	19.97	22.91	26.50	29.78	37.40	41.78	45.98	51.89	54.94	65.03
	2.23	2.45	3.12	3.44	3.75	4.48	5.23	5.72	6.33	7.47	8.55	9.77	10.84	13.52	14.98	17.01	18.57	20.13	23.46
18898	5.64	6.21	7.93	8.77	9.58	11.44	13.45	14.94	16.28	19.35	22.16	25.65	28.82	36.20	40.42	44.49	50.31	53.16	62.92
	2.13	2.33	2.97	3.28	3.59	4.26	4.99	5.44	6.02	7.10	8.14	9.31	10.33	12.88	14.27	16.21	17.68	19.17	22.34
19202	5.48	6.04	7.70	8.50	9.29	11.12	13.04	14.46	15.77	18.73	21.46	24.83	27.90	35.03	39.15	43.09	48.81	51.48	60.94
	2.04	2.23	2.84	3.13	3.41	4.07	4.77	5.19	5.74	6.77	7.74	8.85	9.83	12.27	13.60	15.44	16.85	18.27	21.27
19507	5.34	5.86	7.48	8.27	9.01	10.78	12.66	14.02	15.27	18.14	20.79	24.05	27.05	33.94	37.92	41.73	47.38	49.88	59.03
	1.95	2.13	2.71	3.00	3.26	3.89	4.55	4.94	5.47	6.46	7.39	8.44	9.38	11.70	12.97	14.72	16.06	17.42	20.30
19812	5.18	5.69	7.28	8.02	8.77	10.46	12.30	13.58	14.81	17.60	20.15	23.33	26.22	32.92	36.77	40.46	46.01	48.34	57.23
	1.86	2.04	2.61	2.87	3.12	3.72	4.34	4.71	5.22	6.15	7.06	8.07	8.96	11.17	12.37	14.05	15.33	16.62	19.36
20117	5.03	5.53	7.06	7.80	8.50	10.15	11.95	13.17	14.36	17.04	19.54	22.60	25.40	31.91	35.65	39.24	44.70	46.89	55.51
	1.78	1.95	2.49	2.74	2.99	3.54	4.15	4.50	4.99	5.88	6.74	7.70	8.55	10.66	11.82	13.42	14.63	15.87	18.50
20422	4.90	5.38	6.87	7.58	8.27	9.85	11.61	12.78	13.93	16.54	18.97	21.94	24.66	30.96	34.58	38.06	43.43	45.48	53.85
	1.70	1.86	2.37	2.62	2.86	3.38	3.98	4.30	4.77	5.61	6.43	7.35	8.17	10.20	11.29	12.82	13.99	15.17	17.67
20726	4.77	5.22	6.69	7.39	8.05	9.55	11.29	12.40	13.52	16.06	18.40	21.29	23.94	30.04	33.58	36.95	42.22	44.14	52.27
	1.63	1.79	2.29	2.52	2.74	3.23	3.82	4.13	4.55	5.38	6.15	7.03	7.82	9.74	10.79	12.27	13.38	14.50	16.89
21031	4.64	5.09	6.49	7.18	7.83	9.28	10.98	12.05	13.13	15.60	17.87	20.67	23.24	29.20	32.61	35.90	41.06	42.87	50.75
	1.56	1.72	2.18	2.40	2.62	3.10	3.66	3.94	4.36	5.15	5.89	6.74	7.48	9.32	10.33	11.73	12.79	13.89	16.18
21336	4.52	4.96	6.31	7.00	7.61	9.01	10.68	11.70	12.75	15.16	17.38	20.09	22.59	28.37	31.66	34.86	39.94	41.65	49.31
	1.50	1.64	2.10	2.32	2.52	2.97	3.50	3.77	4.17	4.93	5.64	6.45	7.16	8.93	9.89	11.23	12.25	13.29	15.48
21641	4.39	4.83	6.17	6.80	7.41	8.75	10.39	11.38	12.40	14.72	16.87	19.52	21.94	27.55	30.77	33.88	38.87	40.49	47.91
	1.44	1.59	2.01	2.21	2.42	2.84	3.37	3.60	3.99	4.71	5.39	6.17	6.85	8.56	9.48	10.77	11.74	12.74	14.84
21946	4.29	4.69	6.01	6.62	7.22	8.50	10.12	11.04	12.05	14.31	16.41	19.00	21.33	26.79	29.91	32.93	37.84	39.37	46.59
	1.38	1.51	1.94	2.13	2.32	2.72	3.23	3.45	3.83	4.52	5.18	5.92	6.58	8.20	9.09	10.31	11.26	12.21	14.22

LRFD

METRIC LOAD TABLE/OPEN WEB STEEL JOISTS, LH-SERIES
Based on a 345 MPa Maximum Yield Strength - Loads Shown In Kilonewtons Per Meter (kN/m)

Joist Designation	40LH08	40LH09	40LH10	40LH11	40LH12	40LH13	40LH14	40LH15	40LH16	40LH17	40LH18	40LH19	40LH20	40LH21	40LH22	40LH23	40LH24	40LH25
Depth (mm)	1016	1016	1016	1016	1016	1016	1016	1016	1016	1016	1016	1016	1016	1016	1016	1016	1016	1016
Approx. Wt. (kN/m)	0.23	0.31	0.31	0.32	0.36	0.44	0.51	0.53	0.61	0.74	0.82	0.93	1.18	1.36	1.46	1.77	1.85	2.16
Span (mm) ↓																		
12192	11.35	15.42	18.35	19.23	23.37	28.38	32.39	36.22	42.96	52.02	58.76							
	7.57	10.28	12.24	12.82	15.58	18.92	21.59	24.15	28.64	34.68	39.18							
12497	11.03	14.92	17.73	18.60	22.59	27.37	31.23	34.95	41.38	50.13	56.60							
	7.35	9.95	11.82	12.40	15.06	18.25	20.82	23.30	27.59	33.42	37.73							
12802	10.72	14.44	17.13	17.96	21.81	26.41	30.13	33.71	39.88	48.29	54.55	63.74						
	7.15	9.63	11.42	11.98	14.55	17.61	20.09	22.47	26.59	32.19	36.36	41.94						
13106	10.39	14.01	16.56	17.38	21.10	25.49	29.08	32.54	38.44	46.55	52.59	61.33						
	6.93	9.34	11.04	11.58	14.06	17.00	19.39	21.70	25.62	30.73	35.06	39.06						
13411	10.11	13.57	16.02	16.78	20.40	24.61	28.10	31.43	37.08	44.92	50.74	59.06						
	6.74	9.04	10.68	11.19	13.60	16.41	18.73	20.95	24.72	28.67	32.77	36.44						
13716	9.80	13.14	15.49	16.24	19.74	23.78	27.14	30.35	35.78	43.34	48.94	56.88						
	6.53	8.77	10.01	10.82	13.16	15.48	17.76	19.80	21.74	26.79	30.63	34.04						
14021	9.51	12.74	14.98	15.71	19.10	22.98	26.22	29.33	34.54	41.82	47.25	54.82						
	6.34	8.49	9.36	10.15	12.36	14.49	16.62	18.53	20.34	25.07	28.66	31.85						
14326	9.25	12.34	14.50	15.20	18.49	22.21	25.36	28.37	33.36	40.41	45.66	52.88						
	6.10	7.96	8.78	9.51	11.58	13.58	15.57	17.36	19.07	23.49	26.85	29.85						
14630	8.98	11.96	14.05	14.72	17.90	21.49	24.53	27.45	32.23	39.05	44.10	51.02	64.19					
	5.72	7.47	8.24	8.93	10.87	12.74	14.60	16.28	17.89	22.03	25.20	28.02	34.99					
14935	8.75	11.61	13.61	14.27	17.33	20.79	23.72	26.54	31.17	37.73	42.64	49.26	61.99					
	5.37	7.03	7.74	8.39	10.21	11.98	13.73	15.30	16.81	20.70	23.68	26.32	32.88					
15240	8.50	11.26	13.19	13.83	16.81	20.13	22.98	25.69	30.13	36.51	41.24	47.59	59.86					
	5.06	6.61	7.28	7.89	9.61	11.26	12.91	14.40	15.81	19.48	22.28	24.76	30.93					
15545	8.27	10.94	12.78	13.41	16.28	19.49	22.24	24.88	29.15	35.33	39.89	45.98	57.85	63.70				
	4.77	6.23	6.85	7.42	9.04	10.60	12.17	13.57	14.90	18.35	20.98	23.32	29.14	32.29				
15850	8.05	10.63	12.39	13.00	15.80	18.88	21.55	24.09	28.23	34.19	38.63	44.45	55.95	61.60				
	4.49	5.86	6.46	7.00	8.53	10.01	11.47	12.79	14.05	17.30	19.78	21.99	27.48	30.45				
16154	7.83	10.33	12.01	12.60	15.32	18.30	20.88	23.35	27.33	33.11	37.40	43.00	54.11	59.58				
	4.24	5.54	6.11	6.62	8.05	9.44	10.82	12.08	13.26	16.34	18.68	20.76	25.94	28.74				
16459	7.61	10.02	11.66	12.22	14.85	17.74	20.24	22.64	26.48	32.06	36.25	41.60	52.36	57.66				
	4.01	5.23	5.77	6.26	7.61	8.93	10.24	11.41	12.53	15.44	17.65	19.62	24.51	27.17				
16764	7.41	9.76	11.33	11.87	14.41	17.20	19.62	21.97	25.65	31.08	35.12	40.29	50.69	55.82	63.49			
	3.79	4.96	5.45	5.92	7.20	8.44	9.69	10.79	11.86	14.60	16.71	18.56	23.20	25.71	29.20			
17069	7.22	9.47	11.00	11.52	14.01	16.69	19.04	21.32	24.88	30.13	34.06	39.02	49.09	54.07	61.22			
	3.59	4.69	5.18	5.60	6.82	7.99	9.17	10.23	11.23	13.83	15.81	17.58	21.96	24.34	27.65			
17374	7.04	9.20	10.68	11.20	13.61	16.19	18.49	20.67	24.13	29.24	33.02	37.82	47.59	52.40	59.10	64.35		
	3.40	4.45	4.90	5.31	6.47	7.58	8.69	9.69	10.65	13.11	15.00	16.66	20.82	23.08	26.22	28.63		
17678	6.84	8.97	10.37	10.87	13.22	15.73	17.95	20.09	23.42	28.37	32.06	36.65	46.11	50.80	57.06	62.35		
	3.22	4.21	4.65	5.04	6.14	7.19	8.26	9.20	10.11	12.44	14.22	15.81	19.76	21.90	24.88	27.17		
17983	6.66	8.72	10.08	10.56	12.84	15.27	17.43	19.49	22.72	27.40	31.12	35.55	44.74	49.26	55.13	60.43		
	3.06	4.01	4.42	4.78	5.83	6.82	7.83	8.74	9.60	11.82	13.51	15.01	18.76	20.79	23.62	25.80		
18288	6.49	8.49	9.77	10.28	12.49	14.84	16.94	18.95	22.06	26.50	30.22	34.47	43.34	47.80	53.29	58.59	63.78	
	2.91	3.80	4.20	4.55	5.54	6.49	7.45	8.30	9.12	11.23	12.84	14.28	17.83	19.77	22.46	24.53	26.63	
18593	6.34	8.27	9.47	9.99	12.14	14.41	16.46	18.43	21.45	25.62	29.34	33.36	41.91	46.37	51.54	56.84	61.70	
	2.77	3.63	3.99	4.33	5.26	6.18	7.09	7.90	8.68	10.68	12.21	13.58	16.97	18.81	21.36	23.33	25.33	
18898	6.18	8.05	9.16	9.73	11.82	14.02	15.99	17.90	20.84	24.79	28.51	32.28	40.55	45.05	49.88	55.17	59.71	
	2.64	3.45	3.80	4.13	5.02	5.88	6.74	7.53	8.26	10.17	11.63	12.93	16.15	17.90	20.34	22.22	24.12	
19202	6.04	7.83	8.88	9.47	11.51	13.63	15.55	17.42	20.24	24.00	27.72	31.26	39.28	43.75	48.30	53.55	57.83	
	2.52	3.29	3.63	3.92	4.78	5.60	6.43	7.16	7.88	9.69	11.09	12.33	15.39	17.06	19.38	21.17	22.98	
19507	5.88	7.63	8.62	9.20	11.20	13.26	15.14	16.94	19.70	23.26	26.92	30.29	38.06	42.52	46.80	52.02	56.04	
	2.40	3.13	3.45	3.75	4.56	5.34	6.12	6.84	7.51	9.25	10.56	11.74	14.68	16.27	18.49	20.18	21.92	
19812	5.73	7.44	8.36	8.97	10.90	12.91	14.72	16.47	19.14	22.56	26.09	29.34	36.87	41.21	45.37	50.53	54.30	64.28
	2.29	2.99	3.29	3.57	4.34	5.10	5.85	6.52	7.16	8.82	10.08	11.22	14.01	15.52	17.64	19.26	20.92	24.38
20117	5.56	7.26	8.02	8.72	10.63	12.53	14.36	16.06	17.68	21.86	25.30	28.47	35.76	39.97	44.00	49.13	52.66	62.35
	2.18	2.86	3.15	3.41	4.15	4.87	5.58	6.23	6.84	8.42	9.63	10.71	13.38	14.82	16.84	18.40	19.97	23.29
20422	5.39	7.06	7.80	8.49	10.33	12.18	13.96	15.58	17.42	21.23	24.56	27.62	34.71	38.79	42.68	47.78	51.09	60.50
	2.10	2.74	3.02	3.26	3.98	4.67	5.35	5.95	6.64	8.05	9.20	10.23	12.78	14.17	16.09	17.58	19.08	22.25
20726	5.26	6.88	7.58	8.27	10.04	11.86	13.57	15.11	17.16	20.59	23.83	26.80	33.68	37.65	41.43	46.46	49.60	58.72
	2.01	2.62	2.88	3.13	3.80	4.48	5.12	5.69	6.43	7.70	8.80	9.79	12.22	13.55	15.39	16.81	18.25	21.27
21031	5.12	6.69	7.39	8.05	9.77	11.55	13.19	14.68	16.89	20.00	23.13	26.02	32.71	36.55	40.23	45.22	48.15	57.01
	1.92	2.52	2.77	3.02	3.66	4.30	4.90	5.44	6.24	7.36	8.42	9.36	11.70	12.97	14.73	16.09	17.46	20.37
21336	4.99	6.52	7.19	7.83	9.51	11.25	12.84	14.27	16.65	19.43	22.47	25.27	31.78	35.50	39.09	44.01	46.80	55.39
	1.85	2.42	2.67	2.88	3.51	4.13	4.71	5.21	6.07	7.04	8.07	8.97	11.20	12.41	14.11	15.41	16.72	19.49
21641	4.85	6.36	7.01	7.63	9.28	10.94	12.49	13.84	16.43	18.88	21.84	24.57	30.88	34.51	38.00	42.86	45.48	53.85
	1.78	2.33	2.56	2.77	3.37	3.95	4.50	4.99	5.89	6.75	7.73	8.59	10.74	11.89	13.51	14.76	16.02	18.68
21946	4.74	6.18	6.84	7.44	9.03	10.65	12.17	13.48	15.98	18.35	21.24	23.90	30.03	33.55	36.95	41.73	44.21	52.33
	1.70	2.23	2.46	2.67	3.23	3.79	4.33	4.78	5.64	6.47	7.41	8.23	10.28	11.41	12.95	14.15	15.36	17.90
22250	4.61	6.04	6.66	7.26	8.80	10.39	11.86	13.10	15.54	17.86	20.66	23.24	29.21	32.63	35.91	40.67	43.00	50.91
	1.63	2.14	2.36	2.56	3.10	3.64	4.15	4.59	5.41	6.21	7.10	7.89	9.88	10.94	12.43	13.57	14.73	17.17
22555	4.50	5.88	6.49	7.06	8.58	10.12	11.55	12.75	15.11	17.38	20.11	22.60	28.42	31.75	34.95	39.63	41.85	49.53
	1.57	2.05	2.27	2.46	2.99	3.51	3.98	4.40	5.19	5.96	6.82	7.58	9.47	10.50	11.93	13.03	14.15	16.49
22860	4.39	5.74	6.34	6.88	8.36	9.86	11.26	12.40	14.72	16.91	19.57	22.02	27.67	30.90	34.03	38.63	40.73	48.21
	1.51	1.98	2.18	2.37	2.87	3.37	3.83	4.23	4.99	5.73	6.55	7.28	9.10	10.08	11.45	12.52	13.58	15.83
23165	4.29	5.60	6.18	6.74	8.15	9.63	10.98	12.08	14.33	16.47	19.05	21.42	26.94	30.09	33.14	37.69	39.66	46.94
	1.45	1.91	2.10	2.29	2.75	3.25	3.67	4.07	4.80	5.50	6.28	7.00	8.74	9.69	11.00	12.02	13.06	15.22
23470	4.20	5.47	6.04	6.56	7.96	9.38	10.72	11.77	13.96	16.03	18.56	20.88	26.23	29.30	32.28	36.77	38.63	45.75
	1.41	1.83	2.02	2.20	2.65	3.12	3.54	3.91	4.61	5.29	6.05	6.72	8.40	9.31	10.58	11.55	12.55	14.63
23774	4.08	5.34	5.88	6.40	7.76	9.16	10.46	11.47	13.61	15.63	18.08	20.35	25.56	28.56	31.44	35.87	37.65	44.56
	1.35	1.78	1.95	2.11	2.56	3.02	3.40	3.76	4.43	5.09	5.82	6.46	8.08	8.96	10.18	11.12	12.06	14.06
24079	3.99	5.22	5.73	6.26	7.57	8.94	10.20	11.17	13.26	15.23	17.64	19.83	24.92	27.84	30.66	35.02	36.68	43.44
	1.31	1.72	1.88	2.04	2.46	2.90	3.28	3.61	4.26	4.90	5.60	6.23	7.77	8.62	9.79	10.69	11.61	13.54
24384	3.89	5.09	5.57	6.10	7.39	8.72	9.95	10.90	12.93	14.85	17.17	19.32	24.29	27.14	29.90	34.19	35.78	42.35
	1.25	1.64	1.80	1.97	2.37	2.80	3.15	3.48	4.11	4.71	5.39	5.99	7.48	8.30	9.42	10.30	11.19	13.03

LRFD

METRIC LOAD TABLE/OPEN WEB STEEL JOISTS, LH-SERIES
Based on a 345 MPa Maximum Yield Strength - Loads Shown In Kilonewtons Per Meter (kN/m)

Joist Designation	44LH09	44LH10	44LH11	44LH12	44LH13	44LH14	44LH15	44LH16	44LH17	44LH18	44LH19	44LH20	44LH21	44LH22	44LH23	44LH24	44LH25
Depth (mm)	1118	1118	1118	1118	1118	1118	1118	1118	1118	1118	1118	1118	1118	1118	1118	1118	1118
Approx. Wt. (kN/m)	0.28	0.31	0.32	0.36	0.44	0.45	0.53	0.61	0.69	0.83	0.93	1.20	1.36	1.47	1.72	1.85	2.15
Span (mm) ↓																	
13411	12.79	14.11	16.63	19.62	23.16	27.58	32.09	37.87	42.22	52.27	61.64						
	8.53	9.41	11.09	13.09	15.44	18.38	21.39	25.24	28.15	34.85	41.09						
13716	12.43	13.71	16.15	19.04	22.46	26.70	31.08	36.61	40.84	50.56	59.49						
	8.28	9.15	10.77	12.69	14.97	17.80	20.72	24.41	27.23	33.71	39.66						
14021	12.08	13.32	15.67	18.47	21.77	25.87	30.09	35.43	39.53	48.91	57.45						
	8.05	8.88	10.44	12.31	14.52	17.24	20.06	23.62	26.35	32.61	38.30						
14326	11.74	12.95	15.20	17.92	21.14	25.08	29.17	34.29	38.26	47.37	55.52						
	7.83	8.63	10.14	11.95	14.09	16.72	19.45	22.86	25.51	31.58	36.54						
14630	11.42	12.60	14.75	17.39	20.53	24.31	28.28	33.23	37.05	45.85	53.67						
	7.61	8.40	9.83	11.60	13.68	16.21	18.85	22.15	24.24	30.57	34.29						
14935	11.12	12.25	14.33	16.89	19.92	23.56	27.42	32.17	35.90	44.43	51.89	65.33					
	7.41	8.17	9.51	11.26	13.28	15.71	18.28	21.30	22.78	28.95	32.22	40.30					
15240	10.81	11.92	13.92	16.41	19.35	22.86	26.59	31.17	34.77	43.05	50.21	63.22					
	7.20	7.95	8.94	10.94	12.90	15.00	17.42	20.05	21.42	27.24	30.31	37.91					
15545	10.52	11.60	13.52	15.93	18.79	22.16	25.80	30.22	33.71	41.73	48.59	61.20					
	7.01	7.73	8.43	10.40	12.33	14.12	16.41	18.88	20.18	25.65	28.56	35.71					
15850	10.24	11.29	13.13	15.49	18.27	21.54	25.05	29.30	32.67	40.46	47.06	59.25	65.23				
	6.68	7.35	7.95	9.80	11.63	13.32	15.48	17.80	19.03	24.19	26.92	33.68	37.34				
16154	9.95	10.98	12.75	15.06	17.74	20.89	24.31	28.42	31.69	39.24	45.59	57.39	63.19				
	6.30	6.94	7.50	9.26	10.98	12.57	14.62	16.81	17.96	22.85	25.42	31.80	35.25				
16459	9.69	10.69	12.40	14.63	17.26	20.28	23.61	27.58	30.77	38.09	44.17	55.61	61.25				
	5.96	6.56	7.09	8.75	10.37	11.89	13.82	15.89	16.98	21.59	24.02	30.04	33.31				
16764	9.45	10.42	12.05	14.22	16.78	19.71	22.94	26.76	29.85	36.96	42.81	53.90	59.36				
	5.64	6.21	6.71	8.28	9.82	11.25	13.07	15.03	16.06	20.43	22.73	28.42	31.52				
17069	9.20	10.15	11.73	13.84	16.33	19.17	22.29	26.00	28.99	35.90	41.51	52.28	57.57				
	5.34	5.88	6.36	7.85	9.29	10.65	12.37	14.24	15.22	19.35	21.52	26.92	29.85				
17374	8.97	9.89	11.42	13.48	15.89	18.62	21.67	25.26	28.16	34.86	40.29	50.74	55.86	65.46			
	5.06	5.57	6.02	7.44	8.81	10.09	11.73	13.49	14.43	18.34	20.40	25.52	28.29	32.15			
17678	8.72	9.63	11.12	13.10	15.49	18.12	21.07	24.53	27.36	33.88	39.11	49.22	54.21	63.23			
	4.80	5.29	5.72	7.06	8.36	9.58	11.13	12.81	13.68	17.39	19.36	24.22	26.85	30.51			
17983	8.50	9.38	10.81	12.75	15.06	17.61	20.50	23.83	26.59	32.93	37.97	47.80	52.64	61.09	65.01		
	4.56	5.02	5.42	6.69	7.93	9.10	10.58	12.17	13.00	16.53	18.38	22.99	25.51	28.98	31.68		
18288	8.28	9.15	10.52	12.43	14.66	17.13	19.93	23.17	25.84	32.01	36.87	46.42	51.13	59.06	63.10		
	4.33	4.77	5.16	6.37	7.55	8.65	10.05	11.55	12.36	15.71	17.48	21.86	24.24	27.53	30.12		
18593	8.09	8.93	10.25	12.09	14.27	16.68	19.40	22.54	25.14	31.14	35.82	45.10	49.69	57.13	61.26		
	4.13	4.55	4.91	6.05	7.18	8.23	9.55	11.00	11.76	14.94	16.63	20.79	23.05	26.21	28.64		
18898	7.89	8.71	9.99	11.79	13.92	16.24	18.88	21.93	24.47	30.29	34.82	43.84	48.29	55.29	59.49		
	3.92	4.33	4.67	5.77	6.84	7.83	9.10	10.47	11.19	14.22	15.83	19.80	21.96	24.95	27.27		
19202	7.70	8.49	9.73	11.48	13.54	15.80	18.40	21.33	23.81	29.47	33.85	42.64	46.94	53.54	57.80	64.18	
	3.75	4.13	4.45	5.50	6.52	7.47	8.68	9.98	10.66	13.55	15.09	18.86	20.92	23.77	25.99	28.25	
19507	7.50	8.28	9.50	11.20	13.22	15.41	17.92	20.76	23.17	28.69	32.92	41.46	45.66	51.88	56.18	62.17	
	3.57	3.94	4.24	5.23	6.21	7.12	8.27	9.51	10.17	12.93	14.38	17.99	19.94	22.67	24.79	26.94	
19812	7.32	8.09	9.25	10.91	12.88	14.98	17.46	20.22	22.56	27.94	32.04	40.33	44.40	50.27	54.63	60.25	
	3.41	3.75	4.05	5.00	5.93	6.80	7.89	9.07	9.70	12.34	13.73	17.17	19.04	21.64	23.65	25.71	
20117	7.15	7.89	8.98	10.65	12.56	14.62	17.00	19.70	21.97	27.23	31.17	39.27	43.22	48.77	53.15	58.44	
	3.25	3.59	3.86	4.78	5.66	6.49	7.54	8.66	9.26	11.77	13.10	16.40	18.18	20.66	22.59	24.56	
20422	6.97	7.70	8.72	10.39	12.25	14.24	16.59	19.19	21.40	26.53	30.35	38.22	42.08	47.29	51.72	56.69	
	3.10	3.42	3.70	4.56	5.41	6.20	7.20	8.28	8.85	11.26	12.53	15.67	17.38	19.74	21.58	23.46	
20726	6.82	7.53	8.49	10.12	11.95	13.89	16.17	18.70	20.88	25.84	29.55	37.21	40.99	45.92	50.34	55.03	65.16
	2.97	3.28	3.54	4.36	5.18	5.92	6.88	7.92	8.47	10.77	11.98	14.98	16.62	18.88	20.65	22.44	26.16
21031	6.65	7.35	8.24	9.89	11.66	13.54	15.77	18.22	20.35	25.18	28.77	36.25	39.92	44.58	49.00	53.45	63.27
	2.84	3.13	3.38	4.17	4.96	5.67	6.59	7.58	8.11	10.30	11.47	14.34	15.90	18.06	19.76	21.46	25.04
21336	6.49	7.18	8.01	9.64	11.39	13.22	15.38	17.78	19.83	24.57	27.99	35.21	38.92	43.31	47.73	51.92	61.48
	2.72	3.00	3.23	3.99	4.74	5.42	6.31	7.26	7.76	9.86	10.97	13.73	15.22	17.30	18.91	20.56	23.97
21641	6.36	7.01	7.79	9.42	11.12	12.88	15.01	17.33	19.35	23.96	27.20	34.20	37.92	42.08	46.51	50.45	59.76
	2.61	2.87	3.10	3.83	4.55	5.21	6.05	6.96	7.44	9.45	10.52	13.16	14.59	16.57	18.12	19.70	22.97
21946	6.21	6.84	7.58	9.20	10.85	12.57	14.66	16.91	18.88	23.37	26.45	33.27	36.96	40.93	45.31	49.05	58.09
	2.51	2.75	2.97	3.67	4.36	4.99	5.80	6.66	7.13	9.06	10.08	12.60	13.98	15.89	17.38	18.88	22.02
22250	6.08	6.69	7.39	8.98	10.60	12.30	14.31	16.50	18.43	22.82	25.74	32.36	36.07	39.81	44.17	47.72	56.52
	2.40	2.64	2.86	3.53	4.18	4.78	5.56	6.40	6.84	8.69	9.67	12.09	13.41	15.25	16.66	18.12	21.13
22555	5.95	6.56	7.10	8.80	10.43	12.01	13.98	16.12	17.29	22.24	25.04	31.49	35.17	38.74	43.08	46.42	54.98
	2.30	2.53	2.74	3.38	4.01	4.59	5.34	6.14	6.56	8.34	9.28	11.61	12.87	14.63	15.99	17.39	20.28
22860	5.79	6.40	6.93	8.59	10.20	11.68	13.63	15.73	17.07	21.64	24.35	30.64	34.25	37.71	42.03	45.19	53.51
	2.21	2.45	2.64	3.26	3.86	4.40	5.13	5.91	6.39	8.01	8.91	11.14	12.36	14.05	15.36	16.69	19.48
23165	5.66	6.26	6.78	8.37	9.93	11.38	13.30	15.33	16.82	21.07	23.72	29.85	33.36	36.73	40.99	44.01	52.11
	2.13	2.36	2.55	3.13	3.70	4.24	4.94	5.69	6.21	7.70	8.56	10.71	11.87	13.49	14.76	16.05	18.70
23470	5.53	6.10	6.61	8.18	9.71	11.07	12.97	14.97	16.60	20.53	23.11	29.07	32.48	35.76	40.01	42.87	50.75
	2.05	2.26	2.45	3.02	3.59	4.07	4.75	5.47	6.05	7.39	8.23	10.30	11.42	12.97	14.19	15.42	17.99
23774	5.39	5.95	6.45	7.98	9.47	10.78	12.66	14.62	16.41	20.00	22.51	28.32	31.65	34.85	39.06	41.76	49.47
	1.98	2.18	2.36	2.91	3.44	3.91	4.58	5.28	5.91	7.12	7.92	9.90	10.98	12.49	13.64	14.84	17.30
24079	5.29	5.82	6.31	7.79	9.25	10.52	12.36	14.27	16.02	19.49	21.94	27.62	30.86	33.97	38.14	40.71	48.21
	1.91	2.10	2.29	2.80	3.32	3.77	4.42	5.07	5.69	6.84	7.61	9.54	10.58	12.01	13.13	14.27	16.65
24384	5.16	5.69	6.17	7.58	9.03	10.25	12.05	13.93	15.64	19.01	21.40	26.92	30.07	33.11	37.25	39.71	47.02
	1.85	2.02	2.20	2.69	3.21	3.63	4.26	4.90	5.48	6.59	7.34	9.17	10.18	11.57	12.65	13.74	16.03
24689	5.04	5.56	6.04	7.41	8.84	9.99	11.74	13.61	15.29	18.56	20.88	26.26	29.34	32.31	36.39	38.71	45.85
	1.78	1.95	2.13	2.61	3.09	3.50	4.10	4.72	5.29	6.34	7.06	8.84	9.80	11.14	12.18	13.23	15.44
24994	4.94	5.44	5.88	7.23	8.63	9.76	11.47	13.30	14.94	18.09	20.37	25.62	28.63	31.52	35.56	37.78	44.74
	1.72	1.89	2.04	2.51	2.99	3.37	3.95	4.56	5.12	6.12	6.81	8.52	9.45	10.74	11.74	12.76	14.88
25298	4.83	5.31	5.77	7.06	8.44	9.54	11.20	13.00	14.59	17.65	19.87	24.99	27.93	30.74	34.76	36.86	43.66
	1.66	1.82	1.98	2.42	2.88	3.25	3.80	4.40	4.93	5.89	6.56	8.21	9.10	10.34	11.32	12.30	14.34
25603	4.72	5.21	5.64	6.88	8.24	9.29	10.94	12.69	14.27	17.24	19.40	24.40	27.27	30.03	33.98	35.98	42.61
	1.60	1.76	1.91	2.33	2.78	3.13	3.67	4.24	4.77	5.69	6.33	7.92	8.78	9.98	10.91	11.86	13.83
25908	4.61	5.09	5.51	6.74	8.07	9.07	10.68	12.43	13.96	16.82	18.95	23.83	26.63	29.33	33.24	35.15	41.63
	1.54	1.70	1.85	2.26	2.69	3.02	3.54	4.11	4.61	5.48	6.11	7.64	8.47	9.63	10.53	11.45	13.35
26213	4.52	4.99	5.39	6.56	7.89	8.88	10.42	12.14	13.65	16.43	18.51	23.29	26.02	28.64	32.50	34.33	40.67
	1.50	1.64	1.79	2.17	2.61	2.91	3.41	3.96	4.45	5.29	5.89	7.38	8.18	9.29	10.17	11.06	12.90
26518	4.42	4.87	5.29	6.40	7.72	8.66	10.20	11.87	13.35	16.06	18.08	22.73	25.40	27.99	31.80	33.55	39.72
	1.44	1.60	1.73	2.10	2.52	2.81	3.31	3.83	4.30	5.12	5.70	7.13	7.90	8.98	9.82	10.68	12.44
26822	4.33	4.77	5.16	6.27	7.57	8.46	9.95	11.61	13.06	15.71	17.68	22.24	24.83	27.36	31.12	32.79	38.83
	1.40	1.54	1.67	2.02	2.43	2.72	3.19	3.72	4.15	4.94	5.50	6.88	7.63	8.68	9.48	10.31	12.02

LRFD

METRIC LOAD TABLE/OPEN WEB STEEL JOISTS, LH-SERIES
Based on a 345 MPa Maximum Yield Strength - Loads Shown In Kilonewtons Per Meter (kN/m)

Joist Designation	48LH10	48LH11	48LH12	48LH13	48LH14	48LH15	48LH16	48LH17	48LH18	48LH19	48LH20	48LH21	48LH22	48LH23	48LH24	48LH25
Depth (mm)	1219	1219	1219	1219	1219	1219	1219	1219	1219	1219	1219	1219	1219	1219	1219	1219
Approx. Wt. (kN/m)	0.31	0.32	0.36	0.42	0.47	0.53	0.61	0.69	0.83	0.90	1.15	1.27	1.47	1.59	1.81	2.10
Span (mm) ↓																
14630	11.77	12.71	16.54	19.80	24.12	27.67	32.71	36.73	46.86	55.52						
	7.85	8.47	11.03	13.20	16.08	18.44	21.81	24.48	31.24	37.02						
14935	11.48	12.39	16.11	19.26	23.43	26.89	31.78	35.65	45.50	53.80						
	7.66	8.26	10.74	12.84	15.63	17.93	21.19	23.77	30.34	35.87						
15240	11.20	12.08	15.68	18.75	22.78	26.13	30.83	34.60	44.19	52.14						
	7.47	8.05	10.46	12.50	15.19	17.42	20.56	23.07	29.46	34.76						
15545	10.91	11.77	15.27	18.27	22.16	25.40	29.96	33.62	42.92	50.56	63.67					
	7.28	7.85	10.18	12.18	14.78	16.94	19.97	22.41	28.61	33.71	42.45					
15850	10.65	11.48	14.88	17.78	21.55	24.70	29.11	32.66	41.69	49.03	61.74					
	7.10	7.66	9.92	11.86	14.37	16.47	19.40	21.77	27.80	32.35	40.51					
16154	10.39	11.20	14.49	17.33	20.97	24.05	28.28	31.74	40.51	47.56	59.90					
	6.93	7.47	9.66	11.55	13.98	16.03	18.85	21.16	27.01	30.54	38.25					
16459	10.12	10.94	14.11	16.87	20.40	23.39	27.49	30.83	39.37	46.16	58.14	64.02				
	6.75	7.29	9.41	11.25	13.60	15.60	18.25	20.41	25.91	28.86	36.14	40.08				
16764	9.89	10.68	13.74	16.43	19.84	22.76	26.72	29.99	38.27	44.80	56.44	62.17				
	6.59	7.12	9.16	10.96	13.09	14.98	17.27	19.32	24.53	27.31	34.20	37.92				
17069	9.64	10.42	13.39	16.02	19.32	22.16	26.00	29.17	37.22	43.51	54.82	60.37				
	6.43	6.94	8.80	10.50	12.39	14.19	16.35	18.30	23.23	25.87	32.39	35.91				
17374	9.42	10.17	13.06	15.63	18.82	21.58	25.27	28.37	36.22	42.29	53.25	58.63				
	6.15	6.64	8.34	9.95	11.74	13.45	15.51	17.33	22.02	24.51	30.70	34.04				
17678	9.19	9.93	12.74	15.23	18.31	21.01	24.60	27.59	35.25	41.08	51.76	57.00				
	5.83	6.30	7.90	9.45	11.14	12.76	14.71	16.46	20.89	23.27	29.14	32.31				
17983	8.97	9.69	12.40	14.85	17.83	20.46	23.94	26.88	34.32	39.94	50.31	55.39	65.42			
	5.54	5.98	7.51	8.97	10.59	12.12	13.98	15.63	19.84	22.09	27.67	30.69	34.87			
18288	8.77	9.47	12.09	14.49	17.39	19.93	23.30	26.15	33.40	38.83	48.91	53.86	63.61			
	5.28	5.69	7.15	8.53	10.06	11.52	13.28	14.85	18.86	21.00	26.31	29.17	33.15			
18593	8.58	9.25	11.82	14.14	16.94	19.43	22.69	25.48	32.52	37.78	47.59	52.40	61.87	65.05		
	5.02	5.41	6.80	8.11	9.57	10.96	12.63	14.12	17.95	19.97	25.02	27.74	31.53	34.51		
18898	8.36	9.03	11.52	13.79	16.52	18.95	22.10	24.82	31.69	36.74	46.29	50.97	60.21	63.26		
	4.77	5.15	6.47	7.73	9.12	10.43	12.03	13.45	17.08	19.03	23.83	26.41	30.03	32.86		
19202	8.18	8.81	11.25	13.45	16.11	18.47	21.54	24.18	30.88	35.76	45.06	49.61	58.62	61.51		
	4.55	4.90	6.17	7.36	8.68	9.95	11.47	12.82	16.28	18.12	22.70	25.17	28.61	31.31		
19507	7.98	8.62	10.98	13.13	15.71	18.00	20.98	23.56	30.09	34.82	43.86	48.30	56.93	59.84		
	4.34	4.68	5.88	7.01	8.28	9.48	10.93	12.22	15.52	17.29	21.65	24.00	27.29	29.85		
19812	7.80	8.42	10.72	12.82	15.32	17.57	20.46	22.98	29.33	33.90	42.73	47.06	55.17	58.24		
	4.14	4.46	5.61	6.69	7.90	9.04	10.43	11.67	14.81	16.50	20.66	22.91	26.03	28.50		
20117	7.63	8.24	10.46	12.52	14.94	17.16	19.96	22.41	28.60	33.02	41.63	45.83	53.51	56.69	64.22	
	3.95	4.26	5.35	6.40	7.54	8.63	9.96	11.14	14.15	15.76	19.73	21.87	24.86	27.21	29.61	
20422	7.45	8.05	10.21	12.22	14.59	16.73	19.45	21.84	27.90	32.19	40.55	44.65	51.92	55.20	62.30	
	3.77	4.07	5.12	6.11	7.20	8.26	9.52	10.65	13.52	15.06	18.85	20.91	23.77	26.00	28.29	
20726	7.31	7.88	9.98	11.95	14.24	16.34	19.00	21.32	27.23	31.36	39.53	43.53	50.40	53.77	60.47	
	3.61	3.89	4.90	5.85	6.90	7.89	9.10	10.18	12.93	14.40	18.03	19.99	22.72	24.86	27.05	
21031	7.13	7.70	9.76	11.66	13.89	15.95	18.53	20.79	26.57	30.60	38.54	42.43	48.94	52.40	58.72	
	3.45	3.73	4.68	5.60	6.61	7.55	8.71	9.74	12.37	13.77	17.24	19.13	21.74	23.80	25.88	
21336	6.97	7.53	9.54	11.39	13.58	15.58	18.08	20.31	25.93	29.82	37.57	41.38	47.54	51.06	57.04	
	3.31	3.57	4.49	5.35	6.31	7.23	8.34	9.34	11.85	13.19	16.52	18.31	20.82	22.79	24.79	
21641	6.82	7.36	9.32	11.16	13.26	15.20	17.65	19.83	25.32	29.08	36.65	40.38	46.20	49.77	55.44	65.67
	3.18	3.42	4.30	5.13	6.05	6.93	7.99	8.94	11.35	12.63	15.83	17.55	19.94	21.83	23.75	27.71
21946	6.66	7.22	9.10	10.90	12.95	14.85	17.24	19.35	24.70	28.38	35.76	39.40	44.93	48.55	53.90	63.84
	3.05	3.28	4.13	4.91	5.80	6.65	7.66	8.56	10.88	12.12	15.17	16.82	19.13	20.92	22.76	26.57

LRFD

METRIC LOAD TABLE/OPEN WEB STEEL JOISTS, LH-SERIES
Based on a 345 MPa Maximum Yield Strength - Loads Shown In Kilonewtons Per Meter (kN/m)

Joist Designation	48LH10	48LH11	48LH12	48LH13	48LH14	48LH15	48LH16	48LH17	48LH18	48LH19	48LH20	48LH21	48LH22	48LH23	48LH24	48LH25
Depth (mm)	1219	1219	1219	1219	1219	1219	1219	1219	1219	1219	1219	1219	1219	1219	1219	1219
Approx. Wt. (kN/m)	0.31	0.32	0.36	0.42	0.47	0.53	0.61	0.69	0.83	0.90	1.15	1.27	1.47	1.59	1.81	2.10
Span (mm) ↓																
22250	6.53	7.06	8.90	10.65	12.66	14.53	16.82	18.91	24.13	27.71	34.90	38.45	43.70	47.34	52.45	62.09
	2.91	3.15	3.95	4.72	5.57	6.37	7.35	8.23	10.43	11.63	14.56	16.14	18.34	20.08	21.84	25.48
22555	6.40	6.91	8.71	10.42	12.39	14.19	16.46	18.47	23.59	27.05	34.07	37.53	42.52	46.20	51.02	60.43
	2.80	3.02	3.79	4.53	5.35	6.12	7.06	7.89	10.02	11.16	13.98	15.49	17.61	19.27	20.97	24.45
22860	6.26	6.75	8.50	10.20	12.09	13.87	16.06	18.03	23.04	26.41	33.27	36.65	41.38	45.09	49.66	58.81
	2.68	2.90	3.64	4.34	5.13	5.88	6.77	7.57	9.61	10.71	13.42	14.88	16.91	18.50	20.13	23.49
23165	6.14	6.62	8.33	9.98	11.83	13.57	15.71	17.64	22.51	25.80	32.50	35.81	40.29	44.01	48.34	57.28
	2.58	2.78	3.50	4.18	4.93	5.64	6.50	7.28	9.25	10.30	12.90	14.30	16.25	17.78	19.35	22.57
23470	6.01	6.49	8.15	9.76	11.57	13.28	15.36	17.24	22.02	25.18	31.75	34.98	39.27	42.99	47.10	55.79
	2.48	2.68	3.37	4.02	4.74	5.42	6.26	7.00	8.88	9.89	12.39	13.74	15.63	17.10	18.60	21.70
23774	5.88	6.34	7.98	9.55	11.31	13.00	15.01	16.85	21.54	24.61	31.04	34.16	38.26	41.98	45.89	54.37
	2.39	2.58	3.23	3.86	4.56	5.22	6.02	6.74	8.55	9.51	11.92	13.22	15.03	16.44	17.89	20.86
24079	5.77	6.21	7.80	9.36	11.07	12.71	14.68	16.47	21.05	24.07	30.29	33.40	37.30	41.02	44.74	52.99
	2.30	2.48	3.12	3.72	4.39	5.03	5.79	6.47	8.23	9.16	11.47	12.72	14.46	15.81	17.22	20.08
24384	5.64	6.10	7.66	9.16	10.82	12.43	14.36	16.12	20.59	23.48	29.55	32.66	36.35	40.07	43.62	51.67
	2.21	2.39	3.00	3.59	4.23	4.84	5.57	6.24	7.92	8.81	11.04	12.24	13.92	15.23	16.57	19.33
24689	5.53	5.96	7.50	8.97	10.60	12.17	14.05	15.77	20.15	22.89	28.82	31.93	35.46	39.18	42.55	50.39
	2.13	2.30	2.88	3.45	4.07	4.67	5.37	6.01	7.63	8.49	10.63	11.80	13.41	14.68	15.96	18.63
24994	5.38	5.82	7.35	8.80	10.39	11.92	13.76	15.45	19.71	22.34	28.10	31.23	34.60	38.30	41.51	49.16
	2.05	2.21	2.78	3.32	3.92	4.49	5.18	5.79	7.35	8.18	10.25	11.36	12.93	14.14	15.38	17.95
25298	5.26	5.69	7.19	8.59	10.15	11.66	13.45	15.10	19.30	21.80	27.45	30.55	33.77	37.44	40.51	47.98
	1.98	2.14	2.69	3.22	3.79	4.34	5.00	5.58	7.09	7.89	9.88	10.96	12.46	13.63	14.84	17.30
25603	5.16	5.57	7.04	8.40	9.93	11.39	13.14	14.76	18.91	21.27	26.79	29.90	32.96	36.64	39.54	46.84
	1.92	2.07	2.61	3.10	3.66	4.18	4.83	5.41	6.82	7.61	9.52	10.58	12.02	13.14	14.31	16.69
25908	5.04	5.44	6.88	8.23	9.71	11.16	12.87	14.44	18.44	20.79	26.15	29.21	32.19	35.85	38.63	45.75
	1.85	1.99	2.52	3.00	3.54	4.05	4.67	5.22	6.59	7.35	9.20	10.20	11.60	12.69	13.80	16.11
26213	4.94	5.34	6.74	8.05	9.50	10.91	12.60	14.14	18.03	20.28	25.53	28.54	31.43	35.06	37.73	44.67
	1.79	1.94	2.43	2.90	3.41	3.92	4.52	5.04	6.36	7.09	8.88	9.85	11.19	12.25	13.32	15.55
26518	4.83	5.22	6.58	7.88	9.29	10.68	12.31	13.83	17.61	19.83	24.95	27.88	30.70	34.32	36.86	43.66
	1.73	1.88	2.34	2.81	3.31	3.79	4.36	4.88	6.14	6.84	8.58	9.51	10.81	11.83	12.87	15.01
26822	4.74	5.12	6.45	7.72	9.10	10.46	12.05	13.54	17.20	19.39	24.40	27.27	30.03	33.59	36.03	42.65
	1.69	1.82	2.27	2.72	3.21	3.67	4.21	4.72	5.93	6.62	8.28	9.19	10.44	11.42	12.43	14.50
27127	4.64	5.00	6.31	7.54	8.90	10.24	11.82	13.26	16.82	18.95	23.86	26.66	29.34	32.89	35.21	41.72
	1.63	1.75	2.20	2.62	3.09	3.56	4.08	4.58	5.74	6.39	8.01	8.88	10.09	11.04	12.02	14.02
27432	4.55	4.91	6.18	7.39	8.72	10.02	11.55	12.97	16.46	18.53	23.30	26.06	28.69	32.22	34.42	40.77
	1.57	1.70	2.14	2.55	3.00	3.44	3.95	4.43	5.56	6.18	7.74	8.59	9.76	10.68	11.63	13.55
27737	4.46	4.81	6.05	7.26	8.53	9.80	11.33	12.71	16.08	18.12	22.81	25.48	28.06	31.56	33.68	39.88
	1.53	1.64	2.07	2.48	2.90	3.32	3.83	4.29	5.37	5.98	7.48	8.30	9.44	10.33	11.23	13.11
28042	4.37	4.72	5.95	7.10	8.37	9.60	11.09	12.44	15.73	17.73	22.29	24.92	27.45	30.92	32.93	39.02
	1.48	1.60	2.01	2.39	2.81	3.22	3.72	4.15	5.19	5.79	7.25	8.04	9.13	9.99	10.87	12.69
28346	4.29	4.64	5.82	6.96	8.20	9.41	10.87	12.21	15.41	17.35	21.84	24.40	26.88	30.31	32.23	38.19
	1.44	1.54	1.94	2.32	2.72	3.12	3.60	4.02	5.03	5.60	7.01	7.77	8.84	9.67	10.53	12.28
28651	4.20	4.55	5.70	6.82	8.02	9.23	10.65	11.96	15.07	16.98	21.36	23.87	26.28	29.69	31.56	37.38
	1.40	1.50	1.88	2.24	2.64	3.03	3.48	3.91	4.87	5.42	6.80	7.53	8.56	9.36	10.20	11.89
28956	4.11	4.46	5.60	6.69	7.88	9.03	10.43	11.73	14.75	16.60	20.92	23.37	25.74	29.11	30.88	36.60
	1.35	1.45	1.83	2.18	2.56	2.93	3.38	3.79	4.71	5.25	6.58	7.29	8.28	9.07	9.88	11.52
29261	4.04	4.37	5.48	6.56	7.72	8.85	10.24	11.48	14.44	16.28	20.48	22.89	25.21	28.54	30.25	35.82
	1.31	1.41	1.78	2.11	2.49	2.84	3.28	3.67	4.56	5.09	6.37	7.07	8.04	8.80	9.57	11.16

American National Standard SJI 100 - 2020

STANDARD ASD LOAD TABLE

LONGSPAN STEEL JOISTS, LH-SERIES

Based on a 50 ksi (345 MPa) Maximum Yield Strength
Adopted by the Steel Joist Institute May 1, 2000
Revised to April 27, 2010 – Effective July 1, 2020

The **BLACK** figures in the Load Table give the TOTAL safe uniformly distributed load-carrying capacities, in pounds per linear foot, of **ASD** LH-Series Steel Joists.

The approximate joist weights, in pounds per linear foot (kiloNewtons per meter), given in the Load Table may be added to the other building weights to determine the DEAD load. In all cases the DEAD load, including the joist self-weight, must be deducted from the TOTAL load to determine the LIVE load. The approximate joist weights do not include accessories.

The **RED** figures in the Load Table represent the uniform load, in pounds per linear foot (kiloNewtons per meter), which will produce an approximate joist deflection of 1/360 of the span. This load can be linearly prorated to obtain the uniform load for supplementary deflection criteria (i.e. a uniform load that will produce a joist deflection of 1/240 of the span may be obtained by multiplying the **RED** figures by 360/240). In no case shall the prorated load exceed the TOTAL load-carrying capacity of the joist.

User Note: For floor joists, the RED figures may control the joist selection, and for longer spans consideration shall be given to the effects of camber on slab thickness. If a deeper joist designation cannot be used, CJ-Series composite joists may also be considered to take advantage of increased stiffness available due to composite action.

The Load Table applies to joists with either parallel chords or pitched top chords. Joists can have a top chord pitch up to 1/2 inch per foot (42 mm per meter). If the pitch exceeds this limit, the Load Table does not apply. When top chords are pitched, the load-carrying capacities are determined by the nominal depth of the joists at the center of the span. Sloped parallel-chord joists shall use span as defined by the length along the slope.

Where the joist span is in the **RED SHADED** area of the Load Table, the row of bridging nearest the mid span shall be diagonal bridging with bolted connections at chords and intersections. Hoisting cables shall not be released until this row of bolted diagonal bridging is completely installed. The **RED SHADED** area extends up through 60'–0" (18288 mm).

Where the joist span is in the **BLUE SHADED** area of the Load Table, all rows of bridging shall be diagonal bridging with bolted connections at chords and intersections. Hoisting cables shall not be released until the two rows of bridging nearest the third points are completely installed. The **BLUE SHADED** area starts after 60'–0" (18288 mm) and extends up through 100'–0" (30175 mm).

The approximate gross moment of inertia (not adjusted for shear deformation) of a standard joist listed in the Load Table may be determined as follows:

$I_j = 26.767(W)(L^3)(10^{-6})$ in^4 or $2.6953(W)(L^3)(10^{-5})$ mm^4, where W= **RED** figure in the Load Table, and
L = (span – 0.33) in feet or (span – 102) in millimeters

Loads for span increments not explicitly given in the Load Table may be determined using linear interpolation between the load values given in adjacent span rows. For spans shorter than the first span listed in the Load Table, the capacity shall be equal to that of the shortest listed span.

ASD

STANDARD LOAD TABLE/OPEN WEB STEEL JOISTS, LH-SERIES
Based on a 50 ksi Maximum Yield Strength - Loads Shown In Pounds Per Linear Foot (plf)

Joist Designation	18LH02	18LH03	18LH04	18LH05	18LH06	18LH07	18LH08	18LH09	18LH10	18LH11	18LH12	18LH13	18LH14	18LH15	18LH16	18LH17	18LH18	18LH19	18LH20
Depth (in.)	18	18	18	18	18	18	18	18	18	18	18	18	18	18	18	18	18	18	18
Approx. Wt. (lbs./ft.)	10	11	12	14	15	17	19	21	23	25	28	33	36	39	44	50	57	62	83
Span (ft.) ↓																			
18	805	896	1039	1175	1438	1529	1728	1989	2231	2489	2751								
	805	896	1039	1175	1438	1529	1728	1889	2231	2489	2751								
19	748	833	966	1093	1329	1414	1598	1831	2054	2291	2533								
	748	833	966	1093	1329	1414	1500	1601	2054	2291	2533								
20	697	776	899	1018	1231	1310	1480	1688	1895	2114	2337	2805							
	696	774	896	1009	1169	1229	1283	1369	1816	2005	2226	2576							
21	649	723	838	949	1143	1216	1373	1562	1752	1955	2161	2587	2825						
	600	667	772	870	1008	1059	1105	1180	1565	1728	1918	2220	2413						
22	606	675	783	886	1063	1130	1277	1448	1624	1812	2003	2391	2612	2829					
	520	579	670	755	874	919	959	1024	1358	1500	1664	1926	2094	2276					
23	567	631	732	829	990	1053	1189	1345	1508	1683	1860	2216	2420	2622					
	454	505	585	659	764	803	838	894	1186	1310	1454	1683	1829	1987					
24	531	591	685	776	924	982	1110	1250	1403	1566	1732	2059	2248	2436	2811				
	399	444	514	579	671	705	736	786	1042	1151	1277	1478	1607	1746	1922				
25	497	554	643	728	863	918	1037	1167	1309	1461	1615	1916	2093	2268	2587	2950			
	353	392	454	511	593	623	650	694	920	1016	1128	1306	1419	1542	1697	1929			
26	468	521	604	684	809	840	876	936	1223	1365	1509	1788	1953	2115	2390	2725			
	313	348	403	454	526	553	577	616	817	902	1001	1159	1260	1369	1506	1712			
27	442	493	571	648	749	809	843	901	1145	1278	1413	1671	1825	1978	2214	2524	2916		
	284	317	367	414	469	513	534	571	728	804	893	1033	1123	1220	1343	1526	1739		
28	418	467	535	614	696	780	812	868	1074	1198	1325	1565	1710	1852	2057	2345	2709		
	259	289	329	378	419	476	496	527	652	720	799	925	1006	1093	1203	1367	1557		
29	391	438	500	581	648	726	784	838	1009	1126	1245	1469	1604	1738	1916	2184	2523	2811	
	234	262	296	345	377	428	462	491	586	647	718	832	904	982	1081	1229	1400	1538	
30	367	409	469	543	605	678	758	810	949	1059	1171	1380	1508	1634	1789	2039	2356	2624	
	212	236	266	311	340	386	427	458	529	584	648	750	816	886	975	1108	1263	1387	
31	345	382	440	508	566	635	717	783	894	996	1104	1300	1420	1538	1674	1909	2205	2456	
	193	213	242	282	307	349	387	418	479	529	587	679	738	802	883	1003	1143	1256	
32	324	359	413	476	531	595	680	759	844	934	1042	1226	1336	1451	1570	1790	2068	2303	2862
	175	194	219	256	280	317	351	380	435	480	533	617	671	729	802	911	1038	1141	1402
33	306	337	388	448	499	559	641	713	798	878	980	1157	1255	1370	1475	1682	1943	2164	2689
	160	177	200	233	254	288	320	346	396	437	485	562	611	664	731	830	946	1039	1277
34	289	317	365	421	470	526	604	671	754	826	923	1089	1182	1291	1389	1584	1829	2038	2532
	147	161	182	212	232	264	292	316	362	399	443	513	558	606	667	758	864	949	1167
35	273	299	344	397	443	496	571	633	711	779	870	1027	1114	1217	1310	1494	1725	1922	2388
	135	148	167	195	212	241	267	289	331	366	406	470	511	555	611	695	791	869	1068
36	259	283	325	375	418	469	540	598	672	736	822	970	1053	1150	1237	1411	1630	1816	2256
	124	136	153	179	195	222	246	266	304	336	373	432	469	510	561	638	727	798	981

ASD

STANDARD LOAD TABLE/OPEN WEB STEEL JOISTS, LH-SERIES
Based on a 50 ksi Maximum Yield Strength - Loads Shown In Pounds Per Linear Foot (plf)

Joist Designation	20LH02	20LH03	20LH04	20LH05	20LH06	20LH07	20LH08	20LH09	20LH10	20LH11	20LH12	20LH13	20LH14	20LH15	20LH16	20LH17	20LH18	20LH19	20LH20
Depth (in.)	20	20	20	20	20	20	20	20	20	20	20	20	20	20	20	20	20	20	20
Approx. Wt. (lbs./ft.)	10	11	12	14	15	17	19	21	23	25	28	34	37	40	45	55	61	69	87
Span (ft.) ↓																			
20	712	827	910	1060	1226	1427	1550	1771	1912	2311	2555								
	680	749	910	1020	1226	1427	1487	1620	1747	2311	2555								
21	670	765	851	990	1146	1327	1442	1641	1772	2141	2367	2847							
	586	646	820	879	1146	1239	1282	1396	1506	2141	2367	2798							
22	627	715	796	927	1071	1236	1343	1524	1645	1988	2198	2636	2879						
	509	560	712	763	1007	1076	1112	1212	1307	1885	2093	2428	2640						
23	587	670	746	865	1005	1154	1254	1418	1530	1850	2045	2447	2672	2895					
	444	489	621	666	880	939	971	1058	1141	1647	1828	2121	2306	2507					
24	551	629	700	811	942	1079	1172	1322	1426	1724	1906	2276	2486	2693					
	390	430	546	585	773	825	853	930	1003	1447	1606	1863	2026	2202					
25	517	590	658	756	886	1011	1097	1234	1332	1610	1780	2121	2317	2510	2914				
	345	380	482	517	683	729	754	821	886	1278	1418	1646	1789	1945	2143				
26	442	469	574	616	822	878	908	990	1068	1506	1665	1981	2164	2344	2691				
	306	337	428	459	606	647	669	729	786	1134	1259	1461	1588	1726	1902				
27	437	463	566	609	791	845	873	953	1028	1411	1561	1853	2025	2194	2493	2846			
	303	333	406	437	561	599	619	675	724	1011	1123	1302	1416	1539	1696	1930			
28	431	458	558	602	763	814	842	918	991	1325	1465	1737	1898	2056	2316	2644			
	298	317	386	416	521	556	575	626	673	905	1005	1166	1268	1378	1519	1728			
29	410	452	528	595	723	786	813	886	956	1246	1378	1632	1782	1931	2157	2463	2845		
	274	302	352	395	477	518	536	581	626	814	904	1048	1140	1239	1365	1554	1771		
30	388	434	496	571	679	760	785	856	924	1173	1298	1535	1677	1817	2014	2299	2657	2965	
	250	280	320	366	427	484	500	542	585	734	815	946	1028	1118	1232	1402	1598	1759	
31	365	414	467	544	635	711	760	828	894	1107	1224	1446	1580	1712	1885	2152	2486	2775	
	228	258	291	337	386	438	468	507	545	665	738	856	931	1012	1115	1269	1447	1592	
32	344	395	440	513	596	667	722	802	865	1045	1156	1364	1491	1615	1768	2018	2332	2602	
	208	238	265	308	351	398	428	475	510	604	670	778	846	919	1013	1152	1314	1446	
33	325	372	416	484	560	627	687	778	839	986	1094	1289	1409	1526	1661	1896	2191	2446	
	190	218	243	281	320	362	395	437	479	550	610	708	770	837	922	1050	1197	1317	
34	307	352	393	458	527	590	654	755	814	928	1036	1220	1329	1444	1564	1785	2063	2302	2867
	174	200	223	258	292	331	365	399	448	502	558	647	704	765	843	959	1093	1203	1483
35	291	333	372	434	497	556	621	712	791	875	977	1155	1254	1369	1475	1684	1946	2171	2704
	160	184	205	238	267	303	336	366	411	460	511	593	644	700	772	878	1001	1102	1358
36	275	316	353	411	469	526	588	673	748	827	923	1091	1184	1294	1394	1591	1838	2051	2554
	147	169	189	219	246	278	309	336	377	422	469	544	592	643	709	806	919	1012	1247
37	262	299	335	390	444	497	558	636	707	782	873	1033	1121	1224	1319	1505	1739	1941	2417
	136	156	174	202	226	256	285	309	346	389	432	501	545	592	652	742	846	931	1148
38	249	283	318	371	421	471	530	603	670	741	828	979	1062	1160	1249	1426	1648	1839	2290
	126	143	161	187	209	236	262	285	320	359	398	462	502	546	602	685	781	859	1059
39	237	269	303	353	399	447	503	572	636	703	785	929	1008	1101	1186	1353	1564	1745	2173
	117	133	149	173	192	218	242	264	296	331	368	427	464	505	556	633	722	794	979
40	225	255	289	336	379	425	479	544	604	668	746	882	957	1046	1127	1286	1486	1658	2065
	108	123	139	161	178	202	225	244	274	307	341	395	430	467	515	586	668	735	906

ASD

STANDARD LOAD TABLE/OPEN WEB STEEL JOISTS, LH-SERIES
Based on a 50 ksi Maximum Yield Strength - Loads Shown In Pounds Per Linear Foot (plf)

Joist Designation	24LH03	24LH04	24LH05	24LH06	24LH07	24LH08	24LH09	24LH10	24LH11	24LH12	24LH13	24LH14	24LH15	24LH16	24LH17	24LH18	24LH19	24LH20	24LH21
Depth (in.)	24	24	24	24	24	24	24	24	24	24	24	24	24	24	24	24	24	24	24
Approx. Wt. (lbs./ft.)	11	12	13	16	17	18	21	23	25	27	32	35	38	42	49	57	62	79	88
Span (ft.) ▼																			
24	664	723	827	1041	1214	1287	1661	1784	1948	2235	2688	2936							
	664	723	827	1041	1214	1287	1618	1716	1796	2235	2688	2936							
25	626	681	779	981	1140	1208	1555	1670	1824	2093	2511	2743	2972						
	598	681	779	981	1140	1208	1429	1515	1587	2093	2445	2660	2893						
26	590	642	735	925	1072	1136	1458	1565	1710	1962	2350	2567	2782						
	530	642	695	925	1020	1083	1268	1345	1408	1864	2171	2361	2568						
27	557	606	694	874	1009	1069	1369	1469	1607	1843	2203	2407	2608						
	473	580	620	827	910	966	1131	1199	1256	1662	1935	2105	2290						
28	527	573	656	827	948	1008	1288	1382	1511	1734	2069	2260	2449	2835					
	423	519	555	741	814	865	1013	1074	1124	1488	1733	1885	2050	2263					
29	498	542	621	782	895	951	1216	1302	1423	1633	1946	2126	2304	2641					
	381	467	499	666	732	778	910	965	1011	1338	1558	1695	1843	2035					
30	472	514	588	741	848	899	1144	1228	1341	1540	1833	2002	2170	2466	2819				
	343	421	450	601	661	702	821	871	912	1207	1406	1529	1663	1836	2094				
31	448	487	555	703	800	850	1084	1160	1264	1455	1729	1889	2047	2308	2638				
	311	381	408	544	598	635	744	789	826	1093	1272	1384	1505	1662	1895				
32	425	462	521	667	748	806	1020	1072	1166	1376	1633	1785	1934	2164	2474	2860			
	282	346	370	494	543	577	675	716	750	993	1156	1257	1367	1509	1721	1964			
33	404	440	492	635	706	764	955	995	1054	1304	1545	1689	1830	2034	2325	2688			
	257	315	337	450	495	525	615	652	683	904	1053	1145	1245	1375	1568	1790			
34	342	419	449	604	665	707	832	882	927	1236	1464	1600	1734	1915	2189	2530	2832		
	235	288	308	411	452	480	562	596	624	826	962	1046	1138	1256	1432	1635	1804		
35	339	398	446	579	638	677	808	856	900	1174	1389	1517	1644	1806	2064	2386	2671		
	226	265	297	382	421	447	530	559	588	756	881	958	1042	1150	1312	1497	1653		
36	336	379	440	555	613	649	785	832	875	1115	1319	1441	1562	1706	1950	2255	2523		
	218	246	285	356	393	416	501	528	555	695	809	880	957	1056	1205	1375	1518		
37	323	360	419	530	588	622	764	809	851	1061	1254	1370	1485	1614	1845	2133	2387	2982	
	204	227	264	331	367	388	460	500	525	639	744	810	881	972	1109	1265	1397	1729	
38	307	343	399	504	565	597	731	788	829	1009	1193	1298	1413	1530	1749	2021	2262	2826	
	188	210	244	306	343	362	424	474	498	590	687	747	812	897	1023	1167	1288	1595	
39	293	327	380	480	541	572	696	768	807	957	1135	1232	1346	1451	1659	1918	2147	2682	2993
	175	195	226	284	320	338	393	439	472	545	635	690	751	829	945	1079	1191	1474	1631
40	279	312	363	457	516	545	663	737	787	910	1078	1170	1279	1379	1577	1823	2040	2548	2844
	162	182	210	263	297	314	363	406	449	505	588	639	695	768	876	999	1103	1365	1510
41	267	298	347	437	491	520	632	702	768	865	1026	1113	1217	1312	1500	1734	1941	2424	2706
	152	169	196	245	276	292	337	378	418	468	545	593	645	712	813	927	1024	1267	1402
42	255	285	331	417	468	497	602	668	734	824	977	1061	1159	1250	1429	1652	1849	2309	2578
	141	158	182	228	257	272	313	351	388	435	507	552	600	662	755	862	952	1178	1303
43	244	273	317	399	446	475	574	637	701	786	932	1011	1105	1192	1363	1575	1763	2202	2458
	132	148	171	211	239	254	292	326	361	406	472	514	559	617	704	803	886	1097	1214
44	234	262	304	381	426	455	548	608	671	751	890	966	1055	1138	1301	1504	1683	2103	2347
	124	138	160	197	223	238	272	304	337	378	440	479	521	575	656	749	827	1023	1132
45	224	251	291	364	407	435	524	582	642	717	850	923	1009	1088	1243	1437	1609	2009	2243
	116	130	150	184	208	222	254	285	315	353	412	448	487	538	613	700	772	956	1058
46	215	241	280	348	389	417	501	556	616	686	813	883	965	1041	1190	1375	1539	1922	2146
	109	122	141	172	195	208	238	266	294	331	385	419	456	503	574	655	723	895	990
47	207	231	269	334	373	400	480	533	590	657	779	845	924	996	1139	1317	1474	1841	2055
	102	114	132	161	182	196	223	249	276	310	361	393	427	471	538	614	677	838	927
48	199	222	258	320	357	384	460	511	567	630	747	810	886	955	1092	1262	1412	1764	1969
	96	107	124	152	171	184	209	234	259	291	339	368	401	442	504	576	636	787	870

ASD

STANDARD LOAD TABLE/OPEN WEB STEEL JOISTS, LH-SERIES
Based on a 50 ksi Maximum Yield Strength - Loads Shown In Pounds Per Linear Foot (plf)

Joist Designation	28LH05	28LH06	28LH07	28LH08	28LH09	28LH10	28LH11	28LH12	28LH13	28LH14	28LH15	28LH16	28LH17	28LH18	28LH19	28LH20	28LH21	28LH22	28LH23
Depth (in.)	28	28	28	28	28	28	28	28	28	28	28	28	28	28	28	28	28	28	28
Approx. Wt. (lbs./ft.)	13	16	17	18	21	23	25	27	30	35	38	42	49	56	63	79	88	102	111
Span (ft.) ▼																			
28	626	831	968	1036	1342	1438	1570	1839	2034	2459	2665								
	626	831	968	1036	1342	1438	1570	1839	1944	2459	2665								
29	596	791	920	983	1271	1362	1487	1741	1922	2324	2518	2962							
	596	791	920	983	1271	1362	1487	1674	1747	2324	2518	2839							
30	568	755	874	934	1204	1291	1409	1651	1818	2199	2383	2798							
	568	755	874	934	1186	1291	1380	1510	1576	2130	2317	2561							
31	542	720	831	889	1143	1225	1337	1566	1722	2083	2257	2647							
	542	720	818	873	1074	1169	1249	1367	1427	1928	2098	2319							
32	517	687	791	846	1085	1163	1270	1488	1633	1975	2140	2507	2888						
	499	658	743	793	975	1062	1134	1242	1296	1751	1905	2106	2406						
33	494	656	753	806	1032	1106	1207	1414	1550	1875	2032	2377	2738						
	454	600	677	722	888	967	1033	1131	1181	1595	1735	1918	2192						
34	472	627	718	768	982	1052	1149	1346	1474	1782	1931	2257	2592	2936					
	415	548	618	660	811	883	944	1033	1079	1457	1585	1752	2002	2286					
35	451	600	685	733	935	1002	1094	1282	1402	1695	1837	2137	2445	2791					
	380	502	566	604	743	809	865	946	988	1335	1452	1605	1834	2094					
36	432	574	654	700	892	956	1043	1223	1335	1614	1750	2018	2310	2655	2995				
	349	461	520	555	682	743	794	869	907	1226	1333	1474	1684	1923	2127				
37	414	550	625	669	851	912	996	1166	1272	1539	1668	1910	2186	2527	2833				
	321	424	478	511	628	684	731	800	835	1128	1227	1356	1550	1770	1958				
38	396	527	598	640	813	871	951	1113	1214	1468	1591	1810	2071	2395	2685				
	296	391	441	471	579	631	674	738	770	1040	1132	1251	1429	1632	1806				
39	380	505	573	612	777	833	909	1065	1160	1402	1520	1717	1965	2273	2548				
	274	362	408	435	536	583	623	682	712	962	1046	1157	1321	1509	1670				
40	365	485	549	587	743	797	870	1019	1108	1340	1453	1632	1867	2159	2421				
	254	335	378	403	496	540	577	632	659	891	969	1071	1224	1398	1546				
41	350	466	526	562	708	763	833	976	1060	1282	1390	1553	1777	2055	2303	2884			
	236	311	351	374	460	501	536	586	612	827	899	994	1136	1297	1435	1782			
42	337	448	505	540	667	729	780	857	895	1228	1331	1479	1692	1957	2194	2747			
	219	289	326	348	428	466	498	545	569	769	836	924	1056	1206	1334	1657			
43	323	429	484	517	639	704	762	837	874	1177	1275	1410	1614	1866	2092	2620	2925		
	205	270	305	325	400	439	475	520	543	716	779	861	983	1123	1243	1543	1708		
44	310	412	464	496	612	679	736	818	854	1129	1223	1346	1541	1782	1998	2501	2793		
	192	253	285	305	375	414	448	496	518	668	726	803	917	1048	1159	1439	1593		
45	297	395	445	475	586	651	711	800	835	1083	1174	1287	1473	1703	1909	2390	2669	2936	
	180	238	267	285	351	388	423	476	495	624	679	750	857	979	1083	1345	1489	1688	
46	286	379	427	456	563	625	682	782	816	1040	1128	1231	1409	1629	1827	2287	2553	2808	
	169	223	251	268	329	364	397	454	472	584	635	702	802	916	1013	1258	1393	1579	
47	275	364	410	438	540	600	655	766	799	999	1084	1179	1349	1560	1749	2190	2445	2689	
	159	209	236	252	309	342	373	435	452	547	595	658	751	858	950	1179	1305	1480	
48	265	350	394	420	519	576	629	737	782	958	1043	1130	1293	1495	1676	2099	2344	2578	2950
	150	197	222	236	291	322	351	408	433	513	558	617	705	805	891	1106	1225	1389	1510
49	255	337	379	403	499	554	605	709	766	919	1004	1084	1240	1434	1608	2014	2248	2473	2836
	142	186	209	222	274	303	331	383	415	482	525	580	663	757	837	1040	1151	1305	1419
50	245	324	365	387	481	533	582	682	751	882	964	1041	1191	1377	1544	1933	2159	2374	2727
	133	175	197	209	258	285	312	361	396	454	493	546	623	712	788	978	1083	1228	1335
51	237	313	352	371	463	513	561	656	722	848	926	1000	1144	1323	1484	1858	2074	2281	2625
	126	166	186	196	243	269	294	340	373	427	465	514	587	670	742	921	1020	1156	1257
52	228	301	339	357	446	495	540	632	694	815	891	962	1101	1273	1427	1786	1995	2194	2529
	119	156	176	185	228	255	278	321	352	403	438	485	554	632	700	869	962	1090	1186
53	220	291	327	344	430	477	521	609	668	784	857	925	1059	1225	1373	1719	1920	2111	2437
	113	148	166	175	216	241	263	303	332	380	414	457	523	597	660	820	908	1029	1119
54	213	281	319	331	415	460	502	587	643	755	826	891	1020	1180	1322	1656	1849	2033	2351
	107	140	158	165	204	228	249	285	314	359	391	432	494	564	624	775	858	973	1058
55	206	271	305	319	401	444	485	566	620	728	796	859	983	1137	1275	1596	1782	1960	2269
	102	133	150	156	193	215	236	270	297	340	370	409	467	534	591	733	812	921	1001
56	199	262	295	308	387	429	468	546	598	702	767	828	948	1096	1229	1539	1718	1890	2191
	97	126	142	148	183	204	223	256	281	322	350	387	443	505	559	695	769	872	948

ASD

STANDARD LOAD TABLE/OPEN WEB STEEL JOISTS, LH-SERIES
Based on a 50 ksi Maximum Yield Strength - Loads Shown In Pounds Per Linerar Foot (plf)

Joist Designation	32LH06	32LH07	32LH08	32LH09	32LH10	32LH11	32LH12	32LH13	32LH14	32LH15	32LH16	32LH17	32LH18	32LH19	32LH20	32LH21	32LH22	32LH23	32LH24
Depth (in.)	32	32	32	32	32	32	32	32	32	32	32	32	32	32	32	32	32	32	32
Approx. Wt. (lbs./ft.)	14	16	17	21	21	24	27	30	33	35	42	49	56	62	78	87	101	110	124
Span (ft.) ↓																			
32	655	735	829	1099	1184	1296	1522	1789	1916	2050	2691								
	655	735	829	1099	1184	1296	1522	1789	1916	2050	2691								
33	629	705	793	1049	1131	1238	1453	1705	1827	1954	2561	2951							
	629	705	793	1049	1131	1238	1453	1705	1827	1870	2553	2920							
34	605	678	760	1003	1080	1183	1388	1627	1742	1864	2440	2812							
	605	678	760	1003	1080	1183	1388	1605	1653	1708	2332	2668							
35	581	651	728	959	1033	1131	1328	1553	1663	1779	2326	2681							
	581	651	728	938	1033	1131	1323	1470	1514	1564	2136	2443							
36	559	626	698	917	989	1082	1271	1484	1589	1700	2220	2558	2890						
	559	626	689	861	950	1040	1215	1350	1391	1437	1961	2244	2563						
37	537	602	670	878	947	1036	1217	1419	1519	1626	2120	2443	2760						
	524	584	634	793	875	957	1118	1243	1280	1322	1805	2065	2359						
38	517	580	643	842	907	993	1166	1358	1454	1555	2026	2335	2638						
	484	539	585	731	807	883	1032	1146	1181	1220	1665	1905	2176						
39	498	558	617	807	870	952	1118	1300	1392	1490	1938	2234	2524	2890					
	447	498	540	676	746	816	954	1060	1091	1127	1539	1761	2012	2230					
40	479	538	593	774	834	913	1073	1246	1334	1427	1856	2139	2416	2763					
	414	461	501	626	691	756	883	981	1011	1044	1426	1631	1863	2066					
41	462	518	570	743	801	877	1030	1195	1279	1369	1778	2049	2315	2644					
	384	428	465	581	641	701	820	911	938	969	1323	1513	1729	1917					
42	445	499	549	714	770	842	989	1146	1228	1314	1705	1956	2220	2532					
	357	398	432	540	596	652	762	847	872	901	1230	1407	1608	1782					
43	430	482	528	687	740	810	951	1101	1179	1262	1629	1865	2130	2422					
	333	371	402	503	555	607	710	789	812	839	1146	1310	1497	1660					
44	414	465	509	660	712	779	915	1058	1133	1212	1555	1781	2046	2312	2900				
	310	346	375	469	518	567	662	736	758	783	1069	1222	1397	1548	1927				
45	400	449	490	636	685	750	880	1017	1089	1166	1486	1702	1966	2210	2771				
	290	323	351	439	484	529	619	687	708	731	998	1142	1305	1447	1801				
46	386	433	473	612	660	722	848	979	1048	1122	1422	1628	1883	2114	2651	2961			
	271	302	328	410	453	495	579	643	663	684	934	1069	1221	1354	1685	1866			
47	373	419	456	590	636	696	817	943	1009	1080	1361	1559	1803	2025	2539	2835			
	254	283	307	385	424	464	542	603	621	641	875	1001	1144	1268	1579	1749			
48	361	405	440	566	613	671	788	908	972	1040	1305	1494	1729	1940	2433	2718	2990		
	239	266	288	361	398	436	509	566	583	602	821	940	1074	1190	1482	1641	1862		
49	349	391	425	544	591	647	760	875	937	1003	1252	1434	1658	1862	2334	2607	2869		
	224	250	271	339	374	409	478	531	547	565	772	883	1009	1118	1392	1542	1750		
50	338	379	411	516	571	625	734	817	843	870	1202	1376	1592	1787	2241	2503	2754		
	211	235	255	319	352	385	450	500	515	532	726	831	949	1052	1310	1451	1646		
51	326	366	397	498	550	602	712	801	826	853	1155	1323	1530	1717	2154	2405	2647	2985	
	199	223	242	302	332	363	428	480	495	511	684	782	894	991	1234	1366	1550	1689	
52	315	353	383	480	531	580	688	785	810	837	1111	1272	1471	1652	2071	2313	2545	2877	
	189	211	229	285	315	343	406	461	476	492	645	738	843	935	1163	1288	1462	1593	
53	304	341	369	463	512	560	664	771	795	821	1069	1224	1416	1589	1993	2226	2449	2775	2921
	179	200	216	270	297	325	384	444	458	473	609	697	796	882	1098	1216	1380	1504	1628
54	294	329	357	447	495	541	641	742	780	805	1029	1179	1364	1531	1920	2144	2359	2679	2813
	169	189	205	256	282	308	364	420	440	454	575	658	752	834	1038	1150	1305	1421	1539
55	284	318	345	432	478	522	619	715	766	791	992	1136	1314	1475	1850	2066	2273	2587	2711
	161	179	194	243	267	292	345	397	417	438	544	623	712	789	982	1088	1234	1344	1456
56	275	308	333	418	462	505	598	690	738	776	957	1096	1267	1423	1784	1993	2192	2499	2614
	153	170	184	230	254	277	327	376	395	422	516	590	674	747	930	1030	1169	1273	1379
57	266	298	322	404	445	488	578	666	713	763	923	1057	1223	1373	1722	1923	2116	2416	2523
	145	162	175	219	240	263	311	354	374	407	489	559	639	708	882	977	1108	1207	1307
58	257	288	312	391	430	473	559	643	688	750	891	1021	1181	1326	1662	1857	2043	2337	2436
	138	154	167	208	228	251	295	336	355	393	464	531	606	672	837	927	1051	1145	1240
59	249	279	302	379	416	458	541	621	665	725	861	986	1141	1281	1606	1794	1974	2262	2354
	131	146	159	196	217	239	281	319	337	374	440	504	576	638	794	880	999	1088	1178
60	242	271	293	367	402	443	524	600	643	701	833	954	1103	1238	1553	1734	1908	2190	2275
	125	140	151	189	206	227	267	304	321	355	419	479	547	607	755	836	949	1034	1120
61	234	262	284	356	389	429	508	581	622	678	805	922	1067	1198	1502	1678	1846	2122	2201
	119	133	144	180	196	216	255	288	304	338	398	456	521	577	718	796	903	984	1065
62	227	254	275	345	376	416	492	562	602	656	779	893	1033	1159	1454	1624	1786	2057	2130
	114	127	137	172	186	206	243	275	290	322	379	434	496	549	684	758	860	937	1014
63	220	247	267	335	364	403	477	544	583	635	755	864	1000	1123	1408	1572	1730	1994	2063
	108	121	131	164	178	196	232	262	276	306	361	413	472	524	652	722	819	892	966
64	214	240	259	325	353	390	463	527	564	616	731	837	969	1088	1364	1523	1676	1934	1998
	104	116	125	157	169	187	221	249	264	292	344	394	450	499	622	688	781	851	922

ASD

STANDARD LOAD TABLE/OPEN WEB STEEL JOISTS, LH-SERIES
Based on a 50 ksi Maximum Yield Strength - Loads Shown In Pounds Per Linerar Foot (plf)

Joist Designation	36LH07	36LH08	36LH09	36LH10	36LH11	36LH12	36LH13	36LH14	36LH15	36LH16	36LH17	36LH18	36LH19	36LH20	36LH21	36LH22	36LH23	36LH24	36LH25
Depth (in.)	36	36	36	36	36	36	36	36	36	36	36	36	36	36	36	36	36	36	36
Approx. Wt. (lbs./ft.)	16	18	21	21	23	25	30	36	36	44	49	58	64	81	92	100	122	130	149
Span (ft.) ↓																			
36	582	668	851	1006	1064	1273	1533	1689	1828	2341	2699								
	582	668	851	1006	1064	1273	1533	1689	1828	2341	2699								
37	562	644	820	967	1022	1224	1471	1621	1754	2243	2586	2921							
	562	644	820	967	1022	1224	1471	1621	1754	2243	2586	2921							
38	543	620	780	929	983	1177	1412	1556	1684	2150	2479	2800							
	543	620	780	929	983	1177	1412	1556	1684	2139	2449	2799							
39	525	598	762	894	946	1132	1357	1494	1617	2063	2378	2687							
	525	598	762	894	946	1132	1357	1494	1592	1977	2264	2587							
40	508	576	735	860	910	1090	1304	1436	1554	1980	2283	2579	2986						
	508	576	735	839	910	1088	1275	1401	1475	1831	2097	2396	2661						
41	491	556	710	829	876	1049	1254	1381	1494	1902	2193	2477	2863						
	491	553	704	778	847	1009	1183	1300	1369	1699	1946	2224	2469						
42	475	537	685	798	844	1011	1206	1329	1438	1828	2108	2381	2748						
	469	514	655	724	787	938	1100	1209	1272	1580	1809	2068	2295						
43	460	518	661	769	814	974	1161	1279	1384	1758	2027	2290	2638						
	437	479	610	674	733	874	1025	1126	1185	1471	1685	1926	2138						
44	445	500	639	742	785	940	1118	1232	1333	1692	1950	2204	2535						
	408	447	569	629	684	815	956	1050	1106	1372	1572	1796	1994						
45	431	484	618	716	757	907	1078	1187	1285	1629	1878	2122	2437						
	381	417	532	587	639	762	893	981	1033	1282	1468	1678	1863						
46	417	467	597	691	731	875	1039	1145	1239	1569	1809	2044	2345	2949					
	356	391	497	550	598	713	836	918	967	1200	1374	1570	1744	2174					
47	404	452	578	667	706	845	1002	1104	1195	1512	1744	1970	2258	2839					
	334	366	466	515	560	668	783	860	906	1124	1287	1472	1634	2038					
48	392	437	559	645	682	816	967	1066	1153	1459	1682	1900	2175	2735					
	313	344	437	483	526	627	735	807	850	1055	1208	1381	1533	1912					
49	380	423	541	623	659	789	934	1029	1114	1407	1623	1834	2096	2636	2902				
	294	323	411	454	494	589	690	759	799	991	1135	1297	1440	1797	1991				
50	368	410	524	602	637	763	903	994	1076	1359	1562	1771	2022	2542	2799				
	277	304	387	427	465	554	650	714	751	933	1068	1221	1355	1690	1873				
51	357	397	508	583	616	738	872	961	1040	1310	1501	1710	1951	2450	2701				
	261	286	364	403	438	522	612	672	708	878	1006	1150	1276	1592	1764				
52	347	384	492	564	597	715	844	930	1006	1259	1443	1653	1876	2356	2608	2896			
	246	270	343	380	413	492	577	634	667	828	949	1084	1204	1501	1664	1889			
53	337	373	477	546	578	692	816	890	973	1212	1389	1598	1806	2267	2519	2787			
	232	255	324	358	390	465	545	599	630	782	896	1024	1136	1417	1571	1783			
54	327	361	462	527	559	670	790	871	942	1167	1338	1546	1739	2183	2435	2684	2977		
	220	241	306	339	368	439	515	566	596	739	846	967	1074	1340	1484	1685	1838		
55	318	350	449	509	542	650	765	843	912	1125	1289	1491	1676	2104	2351	2587	2878		
	208	228	290	320	349	416	487	535	563	699	801	915	1016	1267	1404	1594	1739		
56	309	340	435	491	526	630	741	817	884	1085	1243	1438	1616	2029	2267	2495	2783	2981	
	197	216	275	303	330	394	461	507	534	662	758	867	962	1200	1330	1510	1647	1787	
57	300	330	423	474	510	611	718	792	857	1047	1200	1388	1560	1958	2188	2408	2692	2877	
	187	204	260	288	313	373	437	481	506	628	719	822	912	1138	1261	1431	1562	1694	
58	292	321	411	454	495	593	697	768	809	1011	1158	1340	1506	1891	2112	2325	2606	2778	
	177	194	247	273	297	354	415	456	480	596	682	780	866	1080	1196	1358	1482	1607	
59	283	311	398	440	480	575	675	755	795	977	1119	1295	1455	1827	2041	2246	2524	2684	
	168	185	235	260	283	338	395	434	464	566	648	740	822	1025	1136	1290	1407	1526	
60	274	302	386	426	465	557	654	729	781	944	1082	1252	1407	1766	1973	2172	2446	2595	
	160	176	224	248	269	322	376	412	448	538	616	704	781	975	1080	1226	1338	1451	
61	266	293	374	413	451	540	634	706	769	913	1047	1211	1361	1709	1909	2101	2371	2510	2971
	153	168	214	236	257	307	359	392	434	512	586	670	743	927	1027	1166	1273	1380	1608
62	258	284	363	401	438	523	615	683	744	884	1013	1172	1317	1654	1847	2033	2299	2429	2875
	146	160	204	225	246	292	342	373	413	487	558	638	708	883	978	1111	1212	1314	1531
63	251	276	352	389	425	508	596	661	721	856	981	1135	1275	1601	1789	1969	2230	2352	2784
	140	153	195	215	234	279	327	356	394	464	531	607	674	841	932	1058	1155	1252	1458
64	244	268	342	378	412	493	579	641	698	829	950	1099	1236	1551	1733	1907	2165	2279	2697
	134	146	186	206	224	267	312	339	375	443	507	579	643	802	889	1009	1101	1194	1391
65	237	260	333	367	401	478	562	621	677	804	921	1066	1198	1504	1680	1849	2102	2209	2615
	128	140	179	197	214	255	298	323	358	422	484	553	614	766	848	963	1051	1139	1327
66	230	253	323	357	389	464	546	602	656	779	893	1033	1161	1458	1629	1793	2042	2142	2536
	122	134	171	188	205	243	285	309	342	403	462	528	586	731	810	920	1003	1088	1268
67	224	246	314	347	378	450	531	584	637	756	867	1003	1127	1415	1580	1739	1984	2078	2460
	117	128	163	180	196	232	273	295	327	385	441	504	560	699	774	879	959	1040	1211
68	218	239	306	338	368	437	516	567	618	734	841	973	1094	1373	1534	1688	1929	2017	2388
	112	123	157	173	188	222	262	283	312	369	422	482	536	668	740	841	917	994	1158
69	212	233	297	328	358	424	502	551	600	713	817	945	1062	1334	1490	1640	1876	1959	2319
	107	118	150	165	180	213	251	270	299	353	404	462	513	639	708	804	877	952	1109
70	207	227	289	320	348	412	488	535	583	693	794	918	1032	1296	1447	1593	1825	1903	2253
	103	113	144	159	173	204	240	259	286	338	387	442	491	612	678	770	840	911	1061
71	201	221	282	311	339	400	475	520	567	673	771	892	1003	1259	1406	1548	1776	1850	2189
	99	109	138	152	166	195	231	247	274	323	370	423	470	587	650	738	805	873	1017
72	196	215	275	303	330	389	463	505	551	654	750	868	975	1224	1367	1505	1729	1799	2129
	95	104	133	146	159	187	222	237	263	310	355	406	451	562	623	707	772	837	975

ASD

STANDARD LOAD TABLE/OPEN WEB STEEL JOISTS, LH-SERIES
Based on a 50 ksi Maximum Yield Strength - Loads Shown In Pounds Per Linear Foot (plf)

Joist Designation	40LH08	40LH09	40LH10	40LH11	40LH12	40LH13	40LH14	40LH15	40LH16	40LH17	40LH18	40LH19	40LH20	40LH21	40LH22	40LH23	40LH24	40LH25
Depth (in.)	40	40	40	40	40	40	40	40	40	40	40	40	40	40	40	40	40	40
Approx. Wt. (lbs./ft.)	16	21	21	22	25	30	35	36	42	51	56	64	81	93	100	121	127	148
Span (ft.) ↓																		
40	519	705	839	879	1068	1297	1480	1655	1963	2377	2685							
	519	705	839	879	1068	1297	1480	1655	1963	2377	2685							
41	504	682	810	850	1032	1251	1427	1597	1891	2290	2586							
	504	682	810	850	1032	1251	1427	1597	1891	2290	2586							
42	490	660	783	821	997	1207	1377	1540	1822	2206	2492	2912						
	490	660	783	821	997	1207	1377	1540	1822	2206	2492	2874						
43	475	640	757	794	964	1165	1329	1487	1756	2127	2403	2802						
	475	640	757	794	964	1165	1329	1487	1756	2106	2403	2677						
44	462	620	732	767	932	1125	1284	1436	1694	2052	2318	2698						
	462	620	732	767	932	1125	1284	1436	1694	1965	2246	2497						
45	448	601	708	742	902	1087	1240	1387	1635	1980	2236	2599						
	448	601	686	742	902	1061	1217	1357	1490	1836	2099	2333						
46	435	582	685	718	873	1050	1198	1340	1578	1911	2159	2505						
	435	582	642	696	847	993	1139	1270	1394	1718	1964	2183						
47	423	564	663	695	845	1015	1159	1296	1524	1846	2086	2416						
	418	546	602	652	794	931	1067	1190	1307	1610	1840	2046						
48	411	547	642	673	818	982	1121	1254	1473	1784	2015	2331	2933					
	392	512	565	612	745	873	1001	1116	1226	1510	1727	1920	2398					
49	400	531	622	652	792	950	1084	1213	1424	1724	1948	2251	2832					
	368	482	531	575	700	821	941	1049	1152	1419	1623	1804	2253					
50	389	515	603	632	768	920	1050	1174	1377	1668	1884	2174	2735					
	347	453	499	541	659	772	885	987	1084	1335	1527	1697	2120					
51	378	500	584	613	744	891	1016	1137	1332	1614	1823	2101	2643	2910				
	327	427	470	509	620	727	834	930	1021	1258	1438	1598	1997	2213				
52	368	486	566	594	722	863	985	1101	1290	1562	1765	2031	2556	2814				
	308	402	443	480	585	686	786	877	963	1186	1356	1507	1883	2087				
53	358	472	549	576	700	836	954	1067	1249	1513	1709	1965	2472	2722				
	291	380	419	454	552	647	742	828	909	1120	1280	1423	1778	1970				
54	348	458	533	559	679	811	925	1035	1210	1465	1656	1901	2392	2634				
	275	359	396	429	522	612	702	782	859	1058	1210	1345	1680	1862				
55	339	446	518	543	659	786	897	1004	1172	1420	1605	1841	2316	2550	2901			
	260	340	374	406	494	579	664	740	813	1001	1145	1272	1590	1762	2001			
56	330	433	503	527	640	763	870	974	1137	1377	1556	1783	2243	2470	2797			
	246	322	355	384	468	548	629	701	770	948	1084	1205	1505	1668	1895			
57	322	421	488	512	622	740	845	945	1103	1336	1509	1728	2174	2394	2700	2940		
	233	305	336	364	444	520	596	664	730	899	1028	1142	1427	1582	1797	1962		
58	313	410	474	497	604	719	820	918	1070	1296	1465	1675	2107	2321	2607	2849		
	221	289	319	346	421	493	566	631	693	853	975	1084	1354	1501	1705	1862		
59	305	399	461	483	587	698	797	891	1038	1252	1422	1624	2044	2251	2519	2761		
	210	275	303	328	400	468	537	599	658	810	926	1029	1286	1425	1619	1768		
60	297	388	447	470	571	678	774	866	1008	1211	1381	1575	1980	2184	2435	2677	2914	
	200	261	288	312	380	445	511	569	625	770	880	979	1222	1355	1539	1681	1825	
61	290	378	433	457	555	659	752	842	980	1171	1341	1524	1915	2119	2355	2597	2819	
	190	249	274	297	361	424	486	542	595	732	837	931	1163	1289	1464	1599	1736	
62	283	368	419	445	540	641	731	818	952	1133	1303	1475	1853	2058	2279	2521	2728	
	181	237	261	283	344	403	462	516	566	697	797	886	1107	1227	1394	1523	1653	
63	276	358	406	433	526	623	711	796	925	1097	1267	1428	1795	1999	2207	2447	2642	
	173	226	249	269	328	384	441	491	540	664	760	845	1055	1169	1328	1451	1575	
64	269	349	394	421	512	606	692	774	900	1063	1230	1384	1739	1943	2138	2377	2560	
	165	215	237	257	313	366	420	469	515	634	724	805	1006	1115	1267	1383	1502	
65	262	340	382	410	498	590	673	753	875	1031	1192	1341	1685	1883	2073	2309	2481	2937
	157	205	226	245	298	350	401	447	491	605	691	769	960	1064	1209	1320	1434	1671
66	254	332	367	399	486	573	656	734	808	999	1156	1301	1634	1826	2010	2245	2406	2849
	150	196	216	234	285	334	383	427	469	577	660	734	917	1016	1154	1261	1369	1596
67	247	323	357	388	472	557	638	712	796	970	1122	1262	1586	1772	1950	2183	2334	2764
	144	188	207	224	273	320	367	408	455	552	631	701	876	971	1103	1205	1308	1525
68	241	315	347	378	459	542	620	691	784	941	1089	1225	1539	1720	1893	2123	2266	2683
	138	180	198	215	261	307	351	390	441	528	603	671	838	929	1055	1152	1251	1458
69	234	306	338	368	447	528	603	671	772	914	1057	1189	1495	1670	1838	2066	2200	2605
	132	173	190	207	251	295	336	373	428	505	577	642	802	889	1010	1103	1197	1396
70	228	298	329	358	435	514	587	652	761	888	1027	1155	1452	1622	1786	2011	2138	2531
	127	166	183	198	241	283	323	357	416	483	553	615	768	851	967	1056	1146	1336
71	222	291	321	349	424	500	571	633	751	863	998	1123	1411	1577	1736	1958	2078	2460
	122	160	176	190	231	271	309	342	404	463	530	589	736	815	926	1012	1098	1280
72	217	283	313	340	413	487	556	616	730	839	971	1092	1372	1533	1688	1907	2020	2391
	117	153	169	183	222	260	297	328	387	444	508	564	705	782	888	970	1053	1227
73	211	276	305	332	402	475	542	599	710	816	944	1062	1335	1491	1641	1858	1965	2326
	112	147	162	176	213	250	285	315	371	426	487	541	677	750	852	930	1010	1177
74	206	269	297	323	392	463	528	583	691	794	919	1033	1299	1451	1597	1811	1912	2263
	108	141	156	169	205	241	273	302	356	409	468	520	649	720	818	893	970	1130
75	201	263	290	315	382	451	515	567	673	773	894	1006	1264	1412	1555	1765	1861	2203
	104	136	150	163	197	231	263	290	342	393	449	499	624	691	785	858	931	1085
76	196	256	283	308	373	440	502	552	655	753	871	979	1231	1375	1514	1722	1812	2145
	100	131	144	157	189	223	252	279	329	377	431	480	599	664	754	824	895	1043
77	192	250	276	300	364	429	490	538	638	733	848	954	1199	1339	1475	1680	1765	2090
	97	126	139	151	182	214	243	268	316	363	415	461	576	638	725	792	860	1003
78	187	244	269	293	355	419	478	524	622	714	826	930	1168	1305	1437	1639	1720	2036
	93	122	134	145	176	207	233	258	304	349	399	443	554	614	698	762	827	964
79	183	239	262	286	346	409	466	511	606	696	806	906	1139	1272	1401	1600	1676	1985
	90	118	129	140	169	199	225	248	292	336	384	427	533	591	671	733	796	928
80	178	233	255	279	338	399	455	498	591	679	785	883	1110	1240	1366	1562	1635	1935
	86	113	124	135	163	192	216	239	282	323	370	411	513	569	646	706	767	893

ASD

STANDARD LOAD TABLE/OPEN WEB STEEL JOISTS, LH-SERIES
Based on a 50 ksi Maximum Yield Strength - Loads Shown In Pounds Per Linerar Foot (plf)

Joist Designation	44LH09	44LH10	44LH11	44LH12	44LH13	44LH14	44LH15	44LH16	44LH17	44LH18	44LH19	44LH20	44LH21	44LH22	44LH23	44LH24	44LH25
Depth (in.)	44	44	44	44	44	44	44	44	44	44	44	44	44	44	44	44	44
Approx. Wt. (lbs./ft.)	19	21	22	25	30	31	36	42	47	57	64	82	93	101	118	127	147
Span (ft.) ▼																	
44	585	645	760	897	1058	1260	1466	1730	1929	2388	2816						
	585	645	760	897	1058	1260	1466	1730	1929	2388	2816						
45	568	627	738	870	1026	1220	1420	1673	1866	2310	2718						
	568	627	738	870	1026	1220	1420	1673	1866	2310	2718						
46	552	609	716	844	995	1182	1375	1619	1806	2235	2625						
	552	609	716	844	995	1182	1375	1619	1806	2235	2625						
47	537	592	695	819	966	1146	1333	1567	1748	2164	2537						
	537	592	695	819	966	1146	1333	1567	1748	2164	2504						
48	522	576	674	795	938	1111	1292	1518	1693	2095	2452						
	522	576	674	795	938	1111	1292	1518	1661	2095	2350						
49	508	560	655	772	910	1077	1253	1470	1640	2030	2371	2985					
	508	560	652	772	910	1077	1253	1460	1561	1984	2208	2762					
50	494	545	636	750	884	1045	1215	1424	1589	1967	2294	2888					
	494	545	613	750	884	1028	1194	1374	1468	1867	2077	2598					
51	481	530	618	728	859	1013	1179	1381	1540	1907	2220	2796					
	481	530	578	713	845	968	1125	1294	1383	1758	1957	2447					
52	468	516	600	708	835	984	1145	1339	1493	1849	2150	2707	2980				
	458	504	545	672	797	913	1061	1220	1304	1658	1845	2308	2559				
53	455	502	583	688	811	955	1111	1299	1448	1793	2083	2622	2887				
	432	476	514	635	753	862	1002	1152	1231	1566	1742	2179	2416				
54	443	489	567	669	789	927	1079	1260	1406	1740	2018	2541	2798				
	409	450	486	600	711	815	947	1089	1164	1480	1646	2059	2283				
55	432	476	551	650	767	901	1048	1223	1364	1689	1956	2463	2712				
	387	426	460	568	673	771	896	1030	1101	1400	1558	1948	2160				
56	421	464	536	633	746	876	1019	1188	1325	1640	1897	2389	2630				
	366	403	436	538	637	730	848	976	1043	1326	1475	1845	2046				
57	410	452	522	616	726	851	990	1154	1287	1593	1841	2318	2552	2991			
	347	382	413	510	604	692	804	925	989	1257	1398	1749	1939	2203			
58	399	440	508	599	708	828	963	1121	1250	1548	1787	2249	2477	2889			
	329	363	392	484	573	657	763	878	938	1192	1327	1660	1840	2091			
59	389	429	494	583	688	805	937	1089	1215	1505	1735	2184	2405	2791	2970		
	313	344	372	459	544	624	725	834	891	1133	1260	1576	1748	1986	2171		
60	379	418	481	568	670	783	911	1059	1181	1463	1685	2121	2336	2698	2883		
	297	327	354	437	518	593	689	792	847	1077	1198	1498	1661	1887	2064		
61	370	408	469	553	652	762	887	1030	1149	1423	1637	2061	2270	2610	2799		
	283	312	337	415	492	564	655	754	806	1024	1140	1425	1580	1796	1963		
62	361	398	457	539	636	742	863	1002	1118	1384	1591	2003	2206	2526	2718		
	269	297	320	396	469	537	624	718	767	975	1085	1357	1505	1710	1869		
63	352	388	445	525	619	722	841	975	1088	1347	1547	1948	2145	2446	2641	2932	
	257	283	305	377	447	512	595	684	731	929	1034	1293	1434	1629	1781	1936	
64	343	379	434	512	604	704	819	949	1059	1311	1504	1894	2086	2370	2567	2840	
	245	270	291	359	426	488	567	652	697	886	986	1233	1367	1554	1699	1846	
65	335	370	423	499	589	685	798	924	1031	1277	1464	1843	2029	2297	2496	2753	
	234	257	278	343	407	466	541	622	665	846	941	1177	1305	1483	1621	1762	
66	327	361	411	487	574	668	777	900	1004	1244	1424	1794	1975	2228	2428	2670	
	223	246	265	328	388	445	517	594	635	807	898	1124	1246	1416	1548	1683	
67	319	352	399	475	560	651	758	877	978	1212	1387	1746	1923	2161	2363	2590	
	213	235	254	313	371	425	494	568	607	772	859	1074	1191	1353	1479	1608	
68	312	344	388	463	546	635	739	855	954	1181	1350	1700	1873	2098	2300	2514	2977
	204	225	243	299	355	406	472	543	581	738	821	1027	1139	1294	1415	1538	1793
69	304	336	377	452	533	619	721	833	930	1151	1315	1656	1824	2037	2239	2442	2891
	195	215	232	286	340	389	452	520	556	706	786	983	1090	1238	1354	1471	1716
70	297	328	366	441	521	604	703	813	906	1123	1279	1609	1778	1979	2181	2372	2809
	187	206	222	274	325	372	433	498	532	676	752	941	1043	1186	1296	1409	1643
71	291	321	356	431	508	589	686	792	884	1095	1243	1563	1733	1923	2125	2305	2730
	179	197	213	263	312	357	415	477	510	648	721	902	1000	1136	1242	1350	1574
72	284	313	347	421	496	575	670	773	863	1068	1209	1520	1689	1870	2070	2241	2654
	172	189	204	252	299	342	398	457	489	621	691	864	958	1089	1191	1294	1509
73	278	306	338	411	485	562	654	754	842	1043	1176	1479	1648	1819	2018	2180	2582
	165	181	196	242	287	328	381	439	469	596	663	829	919	1045	1142	1242	1448
74	272	300	325	402	477	549	639	737	790	1016	1144	1439	1607	1770	1968	2121	2512
	158	174	188	232	275	315	366	421	450	572	636	796	882	1003	1096	1192	1390
75	265	293	317	393	466	534	623	719	780	989	1113	1400	1565	1723	1920	2065	2445
	152	168	181	224	265	302	352	405	438	549	611	764	847	963	1053	1144	1335
76	259	286	310	383	454	520	608	701	769	963	1084	1364	1524	1678	1873	2011	2381
	146	162	175	215	254	291	339	390	426	528	587	734	814	925	1012	1100	1282
77	253	279	302	374	444	506	593	684	759	938	1056	1328	1484	1634	1828	1959	2319
	141	155	168	207	246	279	326	375	415	507	564	706	783	889	973	1057	1233
78	247	272	295	365	433	493	579	668	750	914	1029	1294	1446	1592	1785	1908	2260
	136	150	162	200	236	268	314	362	405	488	543	679	753	856	935	1017	1186
79	242	266	289	356	423	481	565	652	732	891	1003	1262	1410	1552	1743	1860	2203
	131	144	157	192	228	259	303	348	390	469	522	654	725	823	900	978	1141
80	236	260	282	347	413	469	551	637	715	869	978	1230	1374	1513	1702	1814	2148
	127	139	151	185	220	249	292	336	376	452	503	629	698	793	867	942	1099
81	231	254	276	339	404	457	537	622	699	848	954	1200	1341	1476	1663	1769	2095
	122	134	146	179	212	240	281	324	363	435	484	606	672	764	835	907	1058
82	226	249	269	331	395	446	524	608	683	827	931	1171	1308	1440	1625	1726	2044
	118	130	140	172	205	231	271	313	351	420	467	584	648	736	805	875	1020
83	221	243	264	323	386	436	512	594	667	807	908	1142	1276	1405	1588	1684	1995
	114	125	136	166	198	223	261	302	338	404	450	563	624	709	776	843	983
84	216	238	258	315	377	425	500	580	652	788	887	1115	1246	1372	1553	1644	1947
	110	121	131	160	191	215	252	291	327	390	434	543	602	684	748	813	948
85	211	233	252	308	369	415	488	568	638	769	866	1089	1217	1340	1519	1606	1902
	106	117	127	155	185	207	243	282	316	376	419	524	581	660	722	785	915
86	207	228	247	300	361	406	476	555	624	751	846	1064	1189	1309	1485	1569	1858
	103	113	123	149	179	200	234	272	305	363	404	506	561	637	697	758	884
87	202	223	242	293	353	396	466	543	610	734	826	1039	1161	1279	1453	1533	1815
	99	110	119	144	173	193	227	263	295	351	391	489	542	616	673	732	853
88	198	218	236	287	346	387	455	531	597	718	808	1016	1135	1250	1422	1498	1774
	96	106	115	139	167	187	219	255	285	339	377	472	523	595	650	707	824

ASD

STANDARD LOAD TABLE/OPEN WEB STEEL JOISTS, LH-SERIES
Based on a 50 ksi Maximum Yield Strength - Loads Shown In Pounds Per Linerar Foot (plf)

Joist Designation	48LH10	48LH11	48LH12	48LH13	48LH14	48LH15	48LH16	48LH17	48LH18	48LH19	48LH20	48LH21	48LH22	48LH23	48LH24	48LH25
Depth (in.)	48	48	48	48	48	48	48	48	48	48	48	48	48	48	48	48
Approx. Wt. (lbs./ft.)	21	22	25	29	32	36	42	47	57	62	79	87	101	109	124	144
Span (ft.) ↓																
48	538	581	756	905	1102	1264	1495	1678	2141	2537						
	538	581	756	905	1102	1264	1495	1678	2141	2537						
49	525	566	736	880	1071	1229	1452	1629	2079	2458						
	525	566	736	880	1071	1229	1452	1629	2079	2458						
50	512	552	717	857	1041	1194	1409	1581	2019	2382						
	512	552	717	857	1041	1194	1409	1581	2019	2382						
51	499	538	698	835	1013	1161	1369	1536	1961	2310	2909					
	499	538	698	835	1013	1161	1369	1536	1961	2310	2909					
52	487	525	680	813	985	1129	1330	1492	1905	2240	2821					
	487	525	680	813	985	1129	1330	1492	1905	2217	2776					
53	475	512	662	792	958	1099	1292	1450	1851	2173	2737					
	475	512	662	792	958	1099	1292	1450	1851	2093	2621					
54	463	500	645	771	932	1069	1256	1409	1799	2109	2656	2925				
	463	500	645	771	932	1069	1251	1399	1776	1978	2477	2747				
55	452	488	628	751	907	1040	1221	1370	1749	2047	2579	2840				
	452	488	628	751	897	1027	1184	1324	1681	1872	2344	2599				
56	441	476	612	732	883	1013	1188	1333	1701	1988	2505	2758				
	441	476	603	720	849	973	1121	1254	1592	1773	2220	2461				
57	431	465	597	714	860	986	1155	1296	1655	1932	2433	2679				
	422	455	572	682	805	922	1063	1188	1509	1680	2104	2333				
58	420	454	582	696	837	960	1124	1261	1611	1877	2365	2604				
	400	432	542	648	764	875	1008	1128	1432	1595	1997	2214				
59	410	443	567	679	815	935	1094	1228	1568	1825	2299	2531	2989			
	380	410	515	615	726	831	958	1071	1360	1514	1896	2103	2390			
60	401	433	553	662	795	911	1065	1195	1526	1774	2235	2461	2906			
	362	390	490	585	690	790	910	1018	1293	1439	1803	1999	2272			
61	392	423	540	646	774	888	1037	1164	1486	1726	2174	2394	2827	2972		
	344	371	466	556	656	751	866	968	1230	1369	1715	1901	2161	2365		
62	382	413	527	630	755	866	1010	1134	1448	1679	2115	2329	2751	2890		
	327	353	444	530	625	715	825	922	1171	1304	1633	1810	2058	2252		
63	374	403	514	615	736	844	984	1105	1411	1634	2059	2267	2678	2810		
	312	336	423	505	595	682	786	879	1116	1242	1556	1725	1961	2146		
64	365	394	502	600	718	823	959	1077	1375	1591	2004	2207	2601	2734		
	298	321	403	481	568	650	749	838	1064	1185	1484	1645	1870	2046		
65	357	385	490	586	700	803	935	1050	1340	1549	1952	2150	2521	2661		
	284	306	385	459	542	620	715	800	1015	1131	1416	1570	1784	1953		
66	349	377	478	572	683	784	912	1024	1307	1509	1902	2094	2445	2590	2934	
	271	292	367	439	517	592	683	764	970	1080	1352	1499	1704	1865	2029	
67	341	368	467	559	667	765	889	998	1275	1471	1853	2040	2372	2522	2846	
	259	279	351	419	494	566	653	730	927	1032	1292	1433	1629	1782	1939	
68	334	360	456	546	651	747	868	974	1244	1433	1806	1989	2303	2457	2763	
	248	267	336	401	473	541	624	698	886	987	1236	1370	1557	1704	1854	
69	326	352	446	533	635	729	847	950	1214	1398	1761	1939	2236	2394	2683	
	237	256	321	384	453	518	597	668	848	944	1182	1311	1490	1631	1774	
70	319	344	436	521	621	712	826	928	1185	1363	1717	1891	2172	2333	2606	
	227	245	308	367	433	496	572	640	812	904	1132	1255	1427	1562	1699	
71	312	337	426	510	606	695	807	906	1157	1329	1675	1845	2111	2274	2533	3000
	218	235	295	352	415	475	548	613	778	866	1085	1203	1367	1496	1628	1899
72	305	330	416	498	592	679	788	884	1129	1297	1634	1800	2053	2218	2463	2917
	209	225	283	337	398	456	525	587	746	831	1040	1153	1311	1434	1560	1821

ASD

STANDARD LOAD TABLE/OPEN WEB STEEL JOISTS, LH-SERIES
Based on a 50 ksi Maximum Yield Strength - Loads Shown In Pounds Per Linerar Foot (plf)

Joist Designation	48LH10	48LH11	48LH12	48LH13	48LH14	48LH15	48LH16	48LH17	48LH18	48LH19	48LH20	48LH21	48LH22	48LH23	48LH24	48LH25
Depth (in.)	48	48	48	48	48	48	48	48	48	48	48	48	48	48	48	48
Approx. Wt. (lbs./ft.)	21	22	25	29	32	36	42	47	57	62	79	87	101	109	124	144
Span (ft.) ↓																
73	299	323	407	487	579	664	769	864	1103	1266	1595	1757	1997	2163	2396	2837
	200	216	271	324	382	437	504	564	715	797	998	1106	1257	1376	1497	1746
74	293	316	398	476	566	649	752	844	1078	1236	1557	1715	1943	2111	2331	2761
	192	207	260	311	367	420	484	541	687	765	958	1062	1207	1321	1437	1676
75	286	309	389	466	553	634	734	824	1053	1207	1520	1675	1891	2060	2269	2687
	184	199	250	298	352	403	464	519	659	734	920	1020	1159	1268	1380	1610
76	281	303	381	456	541	620	718	806	1029	1179	1485	1636	1841	2011	2209	2617
	177	191	240	287	338	387	446	499	634	706	884	980	1114	1219	1326	1547
77	275	297	373	446	529	607	702	788	1006	1151	1451	1598	1794	1964	2152	2549
	170	184	231	276	325	372	429	480	609	678	849	942	1071	1172	1275	1487
78	269	290	365	437	517	594	686	770	984	1125	1418	1561	1748	1918	2097	2484
	164	177	222	265	313	358	413	462	586	652	817	906	1030	1127	1226	1430
79	264	284	357	428	506	581	671	753	962	1100	1384	1526	1704	1874	2044	2421
	158	170	214	255	301	345	397	444	564	628	786	872	991	1084	1180	1376
80	258	279	350	419	495	568	656	737	941	1073	1350	1492	1661	1831	1993	2361
	152	164	206	246	290	332	382	428	543	604	757	839	954	1044	1136	1325
81	253	273	343	410	485	556	642	721	921	1046	1317	1459	1620	1790	1944	2302
	146	158	198	237	279	320	368	412	523	582	729	809	919	1006	1094	1277
82	246	266	336	402	475	545	629	706	901	1021	1284	1427	1581	1750	1897	2246
	141	152	191	228	269	308	355	397	504	561	703	779	886	969	1054	1230
83	241	260	329	393	464	533	615	690	882	996	1254	1396	1543	1711	1851	2192
	136	147	185	221	260	298	343	383	486	541	677	751	854	934	1017	1186
84	236	255	322	384	454	521	601	675	864	972	1224	1366	1506	1674	1807	2140
	132	142	179	213	251	287	331	371	468	522	653	725	824	901	981	1144
85	231	249	315	376	444	510	588	660	843	950	1195	1335	1471	1638	1765	2090
	127	137	173	206	243	278	320	358	452	504	631	699	795	870	946	1104
86	226	244	308	368	434	499	576	646	824	927	1167	1304	1436	1602	1724	2041
	123	133	167	199	234	269	310	346	436	486	609	675	767	840	913	1066
87	221	239	301	360	425	488	563	632	805	906	1140	1274	1403	1568	1684	1995
	119	129	161	193	227	260	299	335	421	469	588	652	741	811	882	1029
88	217	234	295	353	416	478	551	619	786	886	1115	1246	1372	1535	1646	1949
	116	125	156	187	220	252	289	324	407	454	568	630	716	783	852	994
89	212	229	289	345	407	468	540	606	769	866	1090	1218	1341	1503	1609	1906
	112	120	151	180	212	244	280	314	394	438	549	609	692	757	824	961
90	208	225	283	338	399	458	528	593	752	847	1065	1191	1311	1472	1573	1863
	108	117	147	175	206	236	271	304	381	424	531	589	669	732	797	929
91	204	220	277	332	390	448	518	581	735	828	1042	1164	1282	1442	1539	1822
	105	113	142	170	199	228	263	294	368	410	513	569	647	708	770	899
92	200	216	272	325	383	439	507	569	719	810	1019	1139	1254	1413	1505	1783
	102	110	138	164	193	221	255	285	356	397	497	551	626	685	745	870
93	196	212	266	318	375	430	497	558	704	793	998	1115	1228	1385	1473	1745
	99	106	133	159	187	214	247	276	345	384	481	533	606	663	722	842
94	192	208	261	312	367	422	487	547	689	776	976	1091	1201	1357	1442	1708
	96	103	129	154	181	208	239	268	334	372	466	516	587	642	699	815
95	188	204	256	306	360	413	477	536	674	759	956	1068	1176	1330	1411	1672
	93	100	126	150	176	201	232	260	323	360	451	500	568	622	677	790
96	185	200	251	300	353	405	468	525	660	744	936	1046	1152	1304	1382	1637
	90	97	122	145	171	195	225	252	313	349	437	485	551	603	656	765

ASD

METRIC LOAD TABLE/OPEN WEB STEEL JOISTS, LH-SERIES
Based on a 345 MPa Maximum Yield Strength - Loads Shown In Kilonewtons Per Meter (kN/m)

Joist Designation	18LH02	18LH03	18LH04	18LH05	18LH06	18LH07	18LH08	18LH09	18LH10	18LH11	18LH12	18LH13	18LH14	18LH15	18LH16	18LH17	18LH18	18LH19	18LH20
Depth (mm)	457	457	457	457	457	457	457	457	457	457	457	457	457	457	457	457	457	457	457
Approx. Wt. (kN/m)	0.15	0.16	0.18	0.21	0.22	0.25	0.28	0.31	0.34	0.37	0.42	0.49	0.54	0.58	0.65	0.74	0.85	0.92	1.24
Span (mm) ↓																			
5486	11.74	13.07	15.16	17.14	20.98	22.31	25.21	29.02	32.55	36.32	40.14								
	11.74	13.07	15.16	17.14	20.98	22.31	25.21	27.56	32.55	36.32	40.14								
5791	10.91	12.15	14.09	15.95	19.39	20.63	23.32	26.72	29.97	33.43	36.96								
	10.91	12.15	14.09	15.95	19.39	20.63	21.89	23.36	29.97	33.43	36.96								
6096	10.17	11.32	13.11	14.85	17.96	19.11	21.59	24.63	27.65	30.85	34.10	40.93							
	10.15	11.29	13.07	14.72	17.06	17.93	18.72	19.97	26.50	29.26	32.48	37.59							
6401	9.47	10.55	12.22	13.84	16.68	17.74	20.03	22.79	25.56	28.53	31.53	37.75	41.22						
	8.75	9.73	11.26	12.69	14.71	15.45	16.12	17.22	22.83	25.21	27.99	32.39	35.21						
6706	8.84	9.85	11.42	12.93	15.51	16.49	18.63	21.13	23.70	26.44	29.23	34.89	38.11	41.28					
	7.58	8.44	9.77	11.01	12.75	13.41	13.99	14.94	19.81	21.89	24.28	28.10	30.55	33.21					
7010	8.27	9.20	10.68	12.09	14.44	15.36	17.35	19.62	22.00	24.56	27.14	32.34	35.31	38.26					
	6.62	7.36	8.53	9.61	11.14	11.71	12.22	13.04	17.30	19.11	21.21	24.56	26.69	28.99					
7315	7.74	8.62	9.99	11.32	13.48	14.33	16.19	18.24	20.47	22.85	25.27	30.04	32.80	35.55	41.02				
	5.82	6.47	7.50	8.44	9.79	10.28	10.74	11.47	15.20	16.79	18.63	21.56	23.45	25.48	28.04				
7620	7.25	8.08	9.38	10.62	12.59	13.39	15.13	17.03	19.10	21.32	23.56	27.96	30.54	33.09	37.75	43.05			
	5.15	5.72	6.62	7.45	8.65	9.09	9.48	10.12	13.42	14.82	16.46	19.05	20.70	22.50	24.76	28.15			
7925	6.82	7.60	8.81	9.98	11.80	12.25	12.78	13.65	17.84	19.92	22.02	26.09	28.50	30.86	34.87	39.76			
	4.56	5.07	5.88	6.62	7.67	8.07	8.42	8.98	11.92	13.16	14.60	16.91	18.38	19.97	21.97	24.98			
8230	6.45	7.19	8.33	9.45	10.93	11.80	12.30	13.14	16.71	18.65	20.62	24.38	26.63	28.86	32.31	36.83	42.55		
	4.14	4.62	5.35	6.04	6.84	7.48	7.79	8.33	10.62	11.73	13.03	15.07	16.38	17.80	19.59	22.27	25.37		
8534	6.10	6.81	7.80	8.96	10.15	11.38	11.85	12.66	15.67	17.48	19.33	22.83	24.95	27.02	30.01	34.22	39.53		
	3.77	4.21	4.80	5.51	6.11	6.94	7.23	7.69	9.51	10.50	11.66	13.49	14.68	15.95	17.55	19.94	22.72		
8839	5.70	6.39	7.29	8.47	9.45	10.59	11.44	12.22	14.72	16.43	18.16	21.43	23.40	25.36	27.96	31.87	36.82	41.02	
	3.41	3.82	4.31	5.03	5.50	6.24	6.74	7.16	8.55	9.44	10.47	12.14	13.19	14.33	15.77	17.93	20.43	22.44	
9144	5.35	5.96	6.84	7.92	8.82	9.89	11.06	11.82	13.84	15.45	17.08	20.13	22.00	23.84	26.10	29.75	34.38	38.29	
	3.09	3.44	3.88	4.53	4.96	5.63	6.23	6.68	7.72	8.52	9.45	10.94	11.90	12.93	14.22	16.17	18.43	20.24	
9449	5.03	5.57	6.42	7.41	8.26	9.26	10.46	11.42	13.04	14.53	16.11	18.97	20.72	22.44	24.43	27.85	32.17	35.84	
	2.81	3.10	3.53	4.11	4.48	5.09	5.64	6.10	6.99	7.72	8.56	9.90	10.77	11.70	12.88	14.63	16.68	18.32	
9754	4.72	5.23	6.02	6.94	7.74	8.68	9.92	11.07	12.31	13.63	15.20	17.89	19.49	21.17	22.91	26.12	30.18	33.60	41.76
	2.55	2.83	3.19	3.73	4.08	4.62	5.12	5.54	6.34	7.00	7.77	9.00	9.79	10.63	11.70	13.29	15.14	16.65	20.46
10058	4.46	4.91	5.66	6.53	7.28	8.15	9.35	10.40	11.64	12.81	14.30	16.88	18.31	19.99	21.52	24.54	28.35	31.58	39.24
	2.33	2.58	2.91	3.40	3.70	4.20	4.67	5.04	5.77	6.37	7.07	8.20	8.91	9.69	10.66	12.11	13.80	15.16	18.63
10363	4.21	4.62	5.32	6.14	6.85	7.67	8.81	9.79	11.00	12.05	13.47	15.89	17.24	18.84	20.27	23.11	26.69	29.74	36.95
	2.14	2.34	2.65	3.09	3.38	3.85	4.26	4.61	5.28	5.82	6.46	7.48	8.14	8.84	9.73	11.06	12.60	13.84	17.03
10668	3.98	4.36	5.02	5.79	6.46	7.23	8.33	9.23	10.37	11.36	12.69	14.98	16.25	17.76	19.11	21.80	25.17	28.04	34.85
	1.97	2.15	2.43	2.84	3.09	3.51	3.89	4.21	4.83	5.34	5.92	6.85	7.45	8.09	8.91	10.14	11.54	12.68	15.58
10973	3.77	4.13	4.74	5.47	6.10	6.84	7.88	8.72	9.80	10.74	11.99	14.15	15.36	16.78	18.05	20.59	23.78	26.50	32.92
	1.80	1.98	2.23	2.61	2.84	3.23	3.59	3.88	4.43	4.90	5.44	6.30	6.84	7.44	8.18	9.31	10.60	11.64	14.31

ASD

METRIC LOAD TABLE/OPEN WEB STEEL JOISTS, LH-SERIES
Based on a 345 MPa Maximum Yield Strength - Loads Shown In Kilonewtons Per Meter (kN/m)

Joist Designation	20LH02	20LH03	20LH04	20LH05	20LH06	20LH07	20LH08	20LH09	20LH10	20LH11	20LH12	20LH13	20LH14	20LH15	20LH16	20LH17	20LH18	20LH19	20LH20
Depth (mm)	508	508	508	508	508	508	508	508	508	508	508	508	508	508	508	508	508	508	508
Approx. Wt. (kN/m)	0.15	0.16	0.18	0.20	0.22	0.25	0.28	0.31	0.34	0.36	0.41	0.50	0.54	0.58	0.66	0.80	0.89	1.01	1.27
Span (mm) ↓																			
6096	10.39	12.06	13.28	15.46	17.89	20.82	22.62	25.84	27.90	33.72	37.28								
	9.92	10.93	13.28	14.88	17.89	20.82	21.70	23.64	25.49	33.72	37.28								
6401	9.77	11.16	12.41	14.44	16.72	19.36	21.04	23.94	25.86	31.24	34.54	41.54							
	8.55	9.42	11.96	12.82	16.72	18.08	18.70	20.37	21.97	31.24	34.54	40.83							
6706	9.15	10.43	11.61	13.52	15.63	18.03	19.59	22.24	24.00	29.01	32.07	38.46	42.01						
	7.42	8.17	10.39	11.13	14.69	15.70	16.22	17.68	19.07	27.50	30.54	35.43	38.52						
7010	8.56	9.77	10.88	12.62	14.66	16.84	18.30	20.69	22.32	26.99	29.84	35.71	38.99	42.24					
	6.47	7.13	9.06	9.71	12.84	13.70	14.17	15.44	16.65	24.03	26.67	30.95	33.65	36.58					
7315	8.04	9.17	10.21	11.83	13.74	15.74	17.10	19.29	20.81	25.15	27.81	33.21	36.28	39.30					
	5.69	6.27	7.96	8.53	11.28	12.03	12.44	13.57	14.63	21.11	23.43	27.18	29.56	32.13					
7620	7.54	8.61	9.60	11.03	12.93	14.75	16.00	18.00	19.43	23.49	25.97	30.95	33.81	36.63	42.52				
	5.03	5.54	7.03	7.54	9.96	10.63	11.00	11.98	12.93	18.65	20.69	24.02	26.10	28.38	31.27				
7925	6.45	6.84	8.37	8.98	11.99	12.81	13.25	14.44	15.58	21.97	24.29	28.91	31.58	34.20	39.27				
	4.46	4.91	6.24	6.69	8.84	9.44	9.76	10.63	11.47	16.54	18.37	21.32	23.17	25.18	27.75				
8230	6.37	6.75	8.26	8.88	11.54	12.33	12.74	13.90	15.00	20.59	22.78	27.04	29.55	32.01	36.38	41.53			
	4.42	4.85	5.92	6.37	8.18	8.74	9.03	9.85	10.56	14.75	16.38	19.00	20.66	22.46	24.75	28.16			
8534	6.28	6.68	8.14	8.78	11.13	11.87	12.28	13.39	14.46	19.33	21.38	25.34	27.69	30.00	33.79	38.58			
	4.34	4.62	5.63	6.07	7.60	8.11	8.39	9.13	9.82	13.20	14.66	17.01	18.50	20.11	22.16	25.21			
8839	5.98	6.59	7.70	8.68	10.55	11.47	11.86	12.93	13.95	18.18	20.11	23.81	26.00	28.18	31.47	35.94	41.51		
	3.99	4.40	5.13	5.76	6.96	7.55	7.82	8.47	9.13	11.87	13.19	15.29	16.63	18.08	19.92	22.67	25.84		
9144	5.66	6.33	7.23	8.33	9.90	11.09	11.45	12.49	13.48	17.11	18.94	22.40	24.47	26.51	29.39	33.55	38.77	43.27	
	3.64	4.08	4.67	5.34	6.23	7.06	7.29	7.90	8.53	10.71	11.89	13.80	15.00	16.31	17.97	20.46	23.32	25.67	
9449	5.32	6.04	6.81	7.93	9.26	10.37	11.09	12.08	13.04	16.15	17.86	21.10	23.05	24.98	27.50	31.40	36.28	40.49	
	3.32	3.76	4.24	4.91	5.63	6.39	6.82	7.39	7.95	9.70	10.77	12.49	13.58	14.76	16.27	18.51	21.11	23.23	
9754	5.02	5.76	6.42	7.48	8.69	9.73	10.53	11.70	12.62	15.25	16.87	19.90	21.75	23.56	25.80	29.45	34.03	37.97	
	3.03	3.47	3.86	4.49	5.12	5.80	6.24	6.93	7.44	8.81	9.77	11.35	12.34	13.41	14.78	16.81	19.17	21.10	
10058	4.74	5.42	6.07	7.06	8.17	9.15	10.02	11.35	12.24	14.38	15.96	18.81	20.56	22.27	24.24	27.67	31.97	35.69	
	2.77	3.18	3.54	4.10	4.67	5.28	5.76	6.37	6.99	8.02	8.90	10.33	11.23	12.21	13.45	15.32	17.46	19.22	
10363	4.48	5.13	5.73	6.68	7.69	8.61	9.54	11.01	11.87	13.54	15.11	17.80	19.39	21.07	22.82	26.05	30.10	33.59	41.84
	2.53	2.91	3.25	3.76	4.26	4.83	5.32	5.82	6.53	7.32	8.14	9.44	10.27	11.16	12.30	13.99	15.95	17.55	21.64
10668	4.24	4.85	5.42	6.33	7.25	8.11	9.06	10.39	11.54	12.76	14.25	16.85	18.30	19.97	21.52	24.57	28.39	31.68	39.46
	2.33	2.68	2.99	3.47	3.89	4.42	4.90	5.34	5.99	6.71	7.45	8.65	9.39	10.21	11.26	12.81	14.60	16.08	19.81
10973	4.01	4.61	5.15	5.99	6.84	7.67	8.58	9.82	10.91	12.06	13.47	15.92	17.27	18.88	20.34	23.21	26.82	29.93	37.27
	2.14	2.46	2.75	3.19	3.59	4.05	4.50	4.90	5.50	6.15	6.84	7.93	8.63	9.38	10.34	11.76	13.41	14.76	18.19
11278	3.82	4.36	4.88	5.69	6.47	7.25	8.14	9.28	10.31	11.41	12.74	15.07	16.35	17.86	19.24	21.96	25.37	28.32	35.27
	1.98	2.27	2.53	2.94	3.29	3.73	4.15	4.50	5.04	5.67	6.30	7.31	7.95	8.63	9.51	10.82	12.34	13.58	16.75
11582	3.63	4.13	4.64	5.41	6.14	6.87	7.73	8.80	9.77	10.81	12.08	14.28	15.49	16.92	18.22	20.81	24.05	26.83	33.42
	1.83	2.08	2.34	2.72	3.05	3.44	3.82	4.15	4.67	5.23	5.80	6.74	7.32	7.96	8.78	9.99	11.39	12.53	15.45
11887	3.45	3.92	4.42	5.15	5.82	6.52	7.34	8.34	9.28	10.25	11.45	13.55	14.71	16.06	17.30	19.74	22.82	25.46	31.71
	1.70	1.94	2.17	2.52	2.80	3.18	3.53	3.85	4.31	4.83	5.37	6.23	6.77	7.36	8.11	9.23	10.53	11.58	14.28
12192	3.28	3.72	4.21	4.90	5.53	6.20	6.99	7.93	8.81	9.74	10.88	12.87	13.96	15.26	16.44	18.76	21.68	24.19	30.13
	1.57	1.79	2.02	2.34	2.59	2.94	3.28	3.56	3.99	4.48	4.97	5.76	6.27	6.81	7.51	8.55	9.74	10.72	13.22

ASD

METRIC LOAD TABLE/OPEN WEB STEEL JOISTS, LH-SERIES
Based on a 345 MPa Maximum Yield Strength - Loads Shown In Kilonewtons Per Meter (kN/m)

Joist Designation	24LH03	24LH04	24LH05	24LH06	24LH07	24LH08	24LH09	24LH10	24LH11	24LH12	24LH13	24LH14	24LH15	24LH16	24LH17	24LH18	24LH19	24LH20	24LH21
Depth (mm)	610	610	610	610	610	610	610	610	610	610	610	610	610	610	610	610	610	610	610
Approx. Wt. (kN/m)	0.16	0.18	0.19	0.23	0.25	0.26	0.31	0.34	0.36	0.39	0.47	0.51	0.55	0.61	0.72	0.83	0.90	1.15	1.28
Span (mm) ↓																			
7315	9.69	10.55	12.06	15.19	17.71	18.78	24.24	26.03	28.42	32.61	39.22	42.84							
	9.69	10.55	12.06	15.19	17.71	18.78	23.61	25.04	26.21	32.61	39.22	42.84							
7620	9.13	9.93	11.36	14.31	16.63	17.62	22.69	24.37	26.61	30.54	36.64	40.03	43.37						
	8.72	9.93	11.36	14.31	16.63	17.62	20.85	22.10	23.16	30.54	35.68	38.81	42.22						
7925	8.61	9.36	10.72	13.49	15.64	16.57	21.27	22.83	24.95	28.63	34.29	37.46	40.60						
	7.73	9.36	10.14	13.49	14.88	15.80	18.50	19.62	20.54	27.20	31.68	34.45	37.47						
8230	8.12	8.84	10.12	12.75	14.72	15.60	19.97	21.43	23.45	26.89	32.15	35.12	38.06						
	6.90	8.46	9.04	12.06	13.28	14.09	16.50	17.49	18.32	24.25	28.23	30.72	33.42						
8534	7.69	8.36	9.57	12.06	13.83	14.71	18.79	20.16	22.05	25.30	30.19	32.98	35.74	41.37					
	6.17	7.57	8.09	10.81	11.87	12.62	14.78	15.67	16.40	21.71	25.29	27.50	29.91	33.02					
8839	7.26	7.90	9.06	11.41	13.06	13.87	17.74	19.00	20.76	23.83	28.39	31.02	33.62	38.54					
	5.56	6.81	7.28	9.71	10.68	11.35	13.28	14.08	14.75	19.52	22.73	24.73	26.89	29.69					
9144	6.88	7.50	8.58	10.81	12.37	13.11	16.69	17.92	19.57	22.47	26.75	29.21	31.66	35.98	41.14				
	5.00	6.14	6.56	8.77	9.64	10.24	11.98	12.71	13.30	17.61	20.51	22.31	24.26	26.79	30.55				
9449	6.53	7.10	8.09	10.25	11.67	12.40	15.81	16.92	18.44	21.23	25.23	27.56	29.87	33.68	38.49				
	4.53	5.56	5.95	7.93	8.72	9.26	10.85	11.51	12.05	15.95	18.56	20.19	21.96	24.25	27.65				
9754	6.20	6.74	7.60	9.73	10.91	11.76	14.88	15.64	17.01	20.08	23.83	26.05	28.22	31.58	36.10	41.73			
	4.11	5.04	5.39	7.20	7.92	8.42	9.85	10.44	10.94	14.49	16.87	18.34	19.94	22.02	25.11	28.66			
10058	5.89	6.42	7.18	9.26	10.30	11.14	13.93	14.52	15.38	19.03	22.54	24.64	26.70	29.68	33.93	39.22			
	3.75	4.59	4.91	6.56	7.22	7.66	8.97	9.51	9.96	13.19	15.36	16.71	18.16	20.06	22.88	26.12			
10363	4.99	6.11	6.55	8.81	9.70	10.31	12.14	12.87	13.52	18.03	21.36	23.35	25.30	27.94	31.94	36.92	41.32		
	3.42	4.20	4.49	5.99	6.59	7.00	8.20	8.69	9.10	12.05	14.03	15.26	16.60	18.32	20.89	23.86	26.32		
10668	4.94	5.80	6.50	8.44	9.31	9.88	11.79	12.49	13.13	17.13	20.27	22.13	23.99	26.35	30.12	34.82	38.98		
	3.29	3.86	4.33	5.57	6.14	6.52	7.73	8.15	8.58	11.03	12.85	13.98	15.20	16.78	19.14	21.84	24.12		
10973	4.90	5.53	6.42	8.09	8.94	9.47	11.45	12.14	12.76	16.27	19.24	21.02	22.79	24.89	28.45	32.90	36.82		
	3.18	3.59	4.15	5.19	5.73	6.07	7.31	7.70	8.09	10.14	11.80	12.84	13.96	15.41	17.58	20.06	22.15		
11278	4.71	5.25	6.11	7.73	8.58	9.07	11.14	11.80	12.41	15.48	18.30	19.99	21.67	23.55	26.92	31.12	34.83	43.51	
	2.97	3.31	3.85	4.83	5.35	5.66	6.71	7.29	7.66	9.32	10.85	11.82	12.85	14.18	16.18	18.46	20.38	25.23	
11582	4.48	5.00	5.82	7.35	8.24	8.71	10.66	11.49	12.09	14.72	17.41	18.94	20.62	22.32	25.52	29.49	33.01	41.24	
	2.74	3.06	3.56	4.46	5.00	5.28	6.18	6.91	7.26	8.61	10.02	10.90	11.85	13.09	14.92	17.03	18.79	23.27	
11887	4.27	4.77	5.54	7.00	7.89	8.34	10.15	11.20	11.77	13.96	16.56	17.97	19.64	21.17	24.21	27.99	31.33	39.14	43.67
	2.55	2.84	3.29	4.14	4.67	4.93	5.73	6.40	6.88	7.95	9.26	10.06	10.96	12.09	13.79	15.74	17.38	21.51	23.80
12192	4.07	4.55	5.29	6.66	7.53	7.95	9.67	10.75	11.48	13.28	15.73	17.07	18.66	20.12	23.01	26.60	29.77	37.18	41.50
	2.36	2.65	3.06	3.83	4.33	4.58	5.29	5.92	6.55	7.36	8.58	9.32	10.14	11.20	12.78	14.57	16.09	19.92	22.03
12497	3.89	4.34	5.06	6.37	7.16	7.58	9.22	10.24	11.20	12.62	14.97	16.24	17.76	19.14	21.89	25.30	28.32	35.37	39.49
	2.21	2.46	2.86	3.57	4.02	4.26	4.91	5.51	6.10	6.82	7.95	8.65	9.41	10.39	11.86	13.52	14.94	18.49	20.46
12802	3.72	4.15	4.83	6.08	6.82	7.25	8.78	9.74	10.71	12.02	14.25	15.48	16.91	18.24	20.85	24.10	26.98	33.69	37.62
	2.05	2.30	2.65	3.32	3.75	3.96	4.56	5.12	5.66	6.34	7.39	8.05	8.75	9.66	11.01	12.57	13.89	17.19	19.01
13106	3.56	3.98	4.62	5.82	6.50	6.93	8.37	9.29	10.23	11.47	13.60	14.75	16.12	17.39	19.89	22.98	25.72	32.13	35.87
	1.92	2.15	2.49	3.07	3.48	3.70	4.26	4.75	5.26	5.92	6.88	7.50	8.15	9.00	10.27	11.71	12.93	16.00	17.71
13411	3.41	3.82	4.43	5.56	6.21	6.64	7.99	8.87	9.79	10.96	12.98	14.09	15.39	16.60	18.98	21.94	24.56	30.69	34.25
	1.80	2.01	2.33	2.87	3.25	3.47	3.96	4.43	4.91	5.51	6.42	6.99	7.60	8.39	9.57	10.93	12.06	14.92	16.52
13716	3.26	3.66	4.24	5.31	5.93	6.34	7.64	8.49	9.36	10.46	12.40	13.47	14.72	15.87	18.14	20.97	23.48	29.31	32.73
	1.69	1.89	2.18	2.68	3.03	3.23	3.70	4.15	4.59	5.15	6.01	6.53	7.10	7.85	8.94	10.21	11.26	13.95	15.44
14021	3.13	3.51	4.08	5.07	5.67	6.08	7.31	8.11	8.98	10.01	11.86	12.88	14.08	15.19	17.36	20.06	22.46	28.04	31.31
	1.59	1.78	2.05	2.51	2.84	3.03	3.47	3.88	4.29	4.83	5.61	6.11	6.65	7.34	8.37	9.55	10.55	13.06	14.44
14326	3.02	3.37	3.92	4.87	5.44	5.83	7.00	7.77	8.61	9.58	11.36	12.33	13.48	14.53	16.62	19.22	21.51	26.86	29.99
	1.48	1.66	1.92	2.34	2.65	2.86	3.25	3.63	4.02	4.52	5.26	5.73	6.23	6.87	7.85	8.96	9.88	12.22	13.52
14630	2.90	3.23	3.76	4.67	5.21	5.60	6.71	7.45	8.27	9.19	10.90	11.82	12.93	13.93	15.93	18.41	20.60	25.74	28.73
	1.40	1.56	1.80	2.21	2.49	2.68	3.05	3.41	3.77	4.24	4.94	5.37	5.85	6.45	7.35	8.40	9.28	11.48	12.69

ASD

METRIC LOAD TABLE/OPEN WEB STEEL JOISTS, LH-SERIES
Based on a 345 MPa Maximum Yield Strength - Loads Shown In Kilonewtons Per Meter (kN/m)

Joist Designation	28LH05	28LH06	28LH07	28LH08	28LH09	28LH10	28LH11	28LH12	28LH13	28LH14	28LH15	28LH16	28LH17	28LH18	28LH19	28LH20	28LH21	28LH22	28LH23
Depth (mm)	711	711	711	711	711	711	711	711	711	711	711	711	711	711	711	711	711	711	711
Approx. Wt. (kN/m)	0.19	0.23	0.25	0.26	0.31	0.34	0.36	0.39	0.44	0.51	0.55	0.61	0.72	0.82	0.92	1.15	1.28	1.49	1.62
Span (mm) ↓																			
8534	9.13	12.12	14.12	15.11	19.58	20.98	22.91	26.83	29.68	35.88	38.89								
	9.13	12.12	14.12	15.11	19.58	20.98	22.91	26.83	28.37	35.88	38.89								
8839	8.69	11.54	13.42	14.34	18.54	19.87	21.70	25.40	28.04	33.91	36.74	43.22							
	8.69	11.54	13.42	14.34	18.54	19.87	21.70	24.43	25.49	33.91	36.74	41.43							
9144	8.28	11.01	12.75	13.63	17.57	18.84	20.56	24.09	26.53	32.09	34.77	40.83							
	8.28	11.01	12.75	13.63	17.30	18.84	20.13	22.03	22.99	31.08	33.81	37.37							
9449	7.90	10.50	12.12	12.97	16.68	17.87	19.51	22.85	25.13	30.39	32.93	38.63							
	7.90	10.50	11.93	12.74	15.67	17.06	18.22	19.94	20.82	28.13	30.61	33.84							
9754	7.54	10.02	11.54	12.34	15.83	16.97	18.53	21.71	23.83	28.82	31.23	36.58	42.14						
	7.28	9.60	10.84	11.57	14.22	15.49	16.54	18.12	18.91	25.55	27.80	30.73	35.11						
10058	7.20	9.57	10.98	11.76	15.06	16.14	17.61	20.63	22.62	27.36	29.65	34.68	39.95						
	6.62	8.75	9.88	10.53	12.95	14.11	15.07	16.50	17.23	23.27	25.32	27.99	31.98						
10363	6.88	9.15	10.47	11.20	14.33	15.35	16.76	19.64	21.51	26.00	28.18	32.93	37.82	42.84					
	6.05	7.99	9.01	9.63	11.83	12.88	13.77	15.07	15.74	21.26	23.13	25.56	29.21	33.36					
10668	6.58	8.75	9.99	10.69	13.64	14.62	15.96	18.70	20.46	24.73	26.80	31.18	35.68	40.73					
	5.54	7.32	8.26	8.81	10.84	11.80	12.62	13.80	14.41	19.48	21.19	23.42	26.76	30.55					
10973	6.30	8.37	9.54	10.21	13.01	13.95	15.22	17.84	19.48	23.55	25.53	29.45	33.71	38.74	43.70				
	5.09	6.72	7.58	8.09	9.95	10.84	11.58	12.68	13.23	17.89	19.45	21.51	24.57	28.06	31.04				
11278	6.04	8.02	9.12	9.76	12.41	13.30	14.53	17.01	18.56	22.46	24.34	27.87	31.90	36.87	41.34				
	4.68	6.18	6.97	7.45	9.16	9.98	10.66	11.67	12.18	16.46	17.90	19.78	22.62	25.83	28.57				
11582	5.77	7.69	8.72	9.34	11.86	12.71	13.87	16.24	17.71	21.42	23.21	26.41	30.22	34.95	39.18				
	4.31	5.70	6.43	6.87	8.44	9.20	9.83	10.77	11.23	15.17	16.52	18.25	20.85	23.81	26.35				
11887	5.54	7.36	8.36	8.93	11.33	12.15	13.26	15.54	16.92	20.46	22.18	25.05	28.67	33.17	37.18				
	3.99	5.28	5.95	6.34	7.82	8.50	9.09	9.95	10.39	14.03	15.26	16.88	19.27	22.02	24.37				
12192	5.32	7.07	8.01	8.56	10.84	11.63	12.69	14.87	16.17	19.55	21.20	23.81	27.24	31.50	35.33				
	3.70	4.88	5.51	5.88	7.23	7.88	8.42	9.22	9.61	13.00	14.14	15.63	17.86	20.40	22.56				
12497	5.10	6.80	7.67	8.20	10.33	11.13	12.15	14.24	15.46	18.70	20.28	22.66	25.93	29.99	33.60	42.08			
	3.44	4.53	5.12	5.45	6.71	7.31	7.82	8.55	8.93	12.06	13.11	14.50	16.57	18.92	20.94	26.00			
12802	4.91	6.53	7.36	7.88	9.73	10.63	11.38	12.50	13.06	17.92	19.42	21.58	24.69	28.56	32.01	40.08			
	3.19	4.21	4.75	5.07	6.24	6.80	7.26	7.95	8.30	11.22	12.20	13.48	15.41	17.60	19.46	24.18			
13106	4.71	6.26	7.06	7.54	9.32	10.27	11.12	12.21	12.75	17.17	18.60	20.57	23.55	27.23	30.53	38.23	42.68		
	2.99	3.94	4.45	4.74	5.83	6.40	6.93	7.58	7.92	10.44	11.36	12.56	14.34	16.38	18.14	22.51	24.92		
13411	4.52	6.01	6.77	7.23	8.93	9.90	10.74	11.93	12.46	16.47	17.84	19.64	22.48	26.00	29.15	36.49	40.76		
	2.80	3.69	4.15	4.45	5.47	6.04	6.53	7.23	7.55	9.74	10.59	11.71	13.38	15.29	16.91	21.00	23.24		
13716	4.33	5.76	6.49	6.93	8.55	9.50	10.37	11.67	12.18	15.80	17.13	18.78	21.49	24.85	27.85	34.87	38.95	42.84	
	2.62	3.47	3.89	4.15	5.12	5.66	6.17	6.94	7.22	9.10	9.90	10.94	12.50	14.28	15.80	19.62	21.73	24.63	
14021	4.17	5.53	6.23	6.65	8.21	9.12	9.95	11.41	11.90	15.17	16.46	17.96	20.56	23.77	26.66	33.37	37.25	40.97	
	2.46	3.25	3.66	3.91	4.80	5.31	5.79	6.62	6.88	8.52	9.26	10.24	11.70	13.36	14.78	18.35	20.32	23.04	
14326	4.01	5.31	5.98	6.39	7.88	8.75	9.55	11.17	11.66	14.57	15.81	17.20	19.68	22.76	25.52	31.96	35.68	39.24	
	2.32	3.05	3.44	3.67	4.50	4.99	5.44	6.34	6.59	7.98	8.68	9.60	10.96	12.52	13.86	17.20	19.04	21.59	
14630	3.86	5.10	5.74	6.12	7.57	8.40	9.17	10.75	11.41	13.98	15.22	16.49	18.86	21.81	24.45	30.63	34.20	37.62	43.05
	2.18	2.87	3.23	3.44	4.24	4.69	5.12	5.95	6.31	7.48	8.14	9.00	10.28	11.74	13.00	16.14	17.87	20.27	22.03
14935	3.72	4.91	5.53	5.88	7.28	8.08	8.82	10.34	11.17	13.41	14.65	15.81	18.09	20.92	23.46	29.39	32.80	36.09	41.38
	2.07	2.71	3.05	3.23	3.99	4.42	4.83	5.58	6.05	7.03	7.66	8.46	9.67	11.04	12.21	15.17	16.79	19.04	20.70
15240	3.57	4.72	5.32	5.64	7.01	7.77	8.49	9.95	10.96	12.87	14.06	15.19	17.38	20.09	22.53	28.21	31.50	34.64	39.79
	1.94	2.55	2.87	3.05	3.76	4.15	4.55	5.26	5.77	6.62	7.19	7.96	9.09	10.39	11.49	14.27	15.80	17.92	19.48
15545	3.45	4.56	5.13	5.41	6.75	7.48	8.18	9.57	10.53	12.37	13.51	14.59	16.69	19.30	21.65	27.11	30.26	33.28	38.30
	1.83	2.42	2.71	2.86	3.54	3.92	4.29	4.96	5.44	6.23	6.78	7.50	8.56	9.77	10.82	13.44	14.88	16.87	18.34
15850	3.32	4.39	4.94	5.21	6.50	7.22	7.88	9.22	10.12	11.89	13.00	14.03	16.06	18.57	20.82	26.06	29.11	32.01	36.90
	1.73	2.27	2.56	2.69	3.32	3.72	4.05	4.68	5.13	5.88	6.39	7.07	8.08	9.22	10.21	12.68	14.03	15.90	17.30
16154	3.21	4.24	4.77	5.02	6.27	6.96	7.60	8.88	9.74	11.44	12.50	13.49	15.45	17.87	20.03	25.08	28.02	30.80	35.56
	1.64	2.15	2.42	2.55	3.15	3.51	3.83	4.42	4.84	5.54	6.04	6.66	7.63	8.71	9.63	11.96	13.25	15.01	16.33
16459	3.10	4.10	4.65	4.83	6.05	6.71	7.32	8.56	9.38	11.01	12.05	13.00	14.88	17.22	19.29	24.16	26.98	29.66	34.31
	1.56	2.04	2.30	2.40	2.97	3.32	3.63	4.15	4.58	5.23	5.70	6.30	7.20	8.23	9.10	11.31	12.52	14.19	15.44
16764	3.00	3.95	4.45	4.65	5.85	6.47	7.07	8.26	9.04	10.62	11.61	12.53	14.34	16.59	18.60	23.29	26.00	28.60	33.11
	1.48	1.94	2.18	2.27	2.81	3.13	3.44	3.94	4.33	4.96	5.39	5.96	6.81	7.79	8.62	10.69	11.85	13.44	14.60
17069	2.90	3.82	4.30	4.49	5.64	6.26	6.82	7.96	8.72	10.24	11.19	12.08	13.83	15.99	17.93	22.46	25.07	27.58	31.97
	1.41	1.83	2.07	2.15	2.67	2.97	3.25	3.73	4.10	4.69	5.10	5.64	6.46	7.36	8.15	10.14	11.22	12.72	13.83

ASD

METRIC LOAD TABLE/OPEN WEB STEEL JOISTS, LH-SERIES
Based on a 345 MPa Maximum Yield Strength - Loads Shown In Kilonewtons Per Meter (kN/m)

Joist Designation	32LH06	32LH07	32LH08	32LH09	32LH10	32LH11	32LH12	32LH13	32LH14	32LH15	32LH16	32LH17	32LH18	32LH19	32LH20	32LH21	32LH22	32LH23	32LH24
Depth (mm)	813	813	813	813	813	813	813	813	813	813	813	813	813	813	813	813	813	813	813
Approx. Wt. (kN/m)	0.20	0.23	0.25	0.31	0.31	0.35	0.39	0.44	0.48	0.51	0.61	0.72	0.82	0.90	1.14	1.27	1.47	1.61	1.81
Span (mm) ↓																			
9754	9.55	10.72	12.09	16.03	17.27	18.91	22.21	26.10	27.96	29.91	39.27								
	9.55	10.72	12.09	16.03	17.27	18.91	22.21	26.10	27.96	29.91	39.27								
10058	9.17	10.28	11.57	15.30	16.50	18.06	21.20	24.88	26.66	28.51	37.37	43.06							
	9.17	10.28	11.57	15.30	16.50	18.06	21.20	24.88	26.66	27.29	37.25	42.61							
10363	8.82	9.89	11.09	14.63	15.76	17.26	20.25	23.74	25.42	27.20	35.60	41.03							
	8.82	9.89	11.09	14.63	15.76	17.26	20.25	23.42	24.12	24.92	34.03	38.93							
10668	8.47	9.50	10.62	13.99	15.07	16.50	19.38	22.66	24.26	25.96	33.94	39.12							
	8.47	9.50	10.62	13.68	15.07	16.50	19.30	21.45	22.09	22.82	31.17	35.65							
10973	8.15	9.13	10.18	13.38	14.43	15.79	18.54	21.65	23.18	24.80	32.39	37.33	42.17						
	8.15	9.13	10.05	12.56	13.86	15.17	17.73	19.70	20.30	20.97	28.61	32.74	37.40						
11278	7.83	8.78	9.77	12.81	13.82	15.11	17.76	20.70	22.16	23.72	30.93	35.65	40.27						
	7.64	8.52	9.25	11.57	12.76	13.96	16.31	18.14	18.68	19.29	26.34	30.13	34.42						
11582	7.54	8.46	9.38	12.28	13.23	14.49	17.01	19.81	21.21	22.69	29.56	34.07	38.49						
	7.06	7.86	8.53	10.66	11.77	12.88	15.06	16.72	17.23	17.80	24.29	27.80	31.75						
11887	7.26	8.14	9.00	11.77	12.69	13.89	16.31	18.97	20.31	21.74	28.28	32.60	36.83	42.17					
	6.52	7.26	7.88	9.86	10.88	11.90	13.92	15.46	15.92	16.44	22.46	25.69	29.36	32.54					
12192	6.99	7.85	8.65	11.29	12.17	13.32	15.65	18.18	19.46	20.82	27.08	31.21	35.25	40.32					
	6.04	6.72	7.31	9.13	10.08	11.03	12.88	14.31	14.75	15.23	20.81	23.80	27.18	30.15					
12497	6.74	7.55	8.31	10.84	11.68	12.79	15.03	17.43	18.66	19.97	25.94	29.90	33.78	38.58					
	5.60	6.24	6.78	8.47	9.35	10.23	11.96	13.29	13.68	14.14	19.30	22.08	25.23	27.97					
12802	6.49	7.28	8.01	10.42	11.23	12.28	14.43	16.72	17.92	19.17	24.88	28.54	32.39	36.95					
	5.21	5.80	6.30	7.88	8.69	9.51	11.12	12.36	12.72	13.14	17.95	20.53	23.46	26.00					
13106	6.27	7.03	7.70	10.02	10.79	11.82	13.87	16.06	17.20	18.41	23.77	27.21	31.08	35.34					
	4.85	5.41	5.86	7.34	8.09	8.85	10.36	11.51	11.85	12.24	16.72	19.11	21.84	24.22					
13411	6.04	6.78	7.42	9.63	10.39	11.36	13.35	15.44	16.53	17.68	22.69	25.99	29.85	33.74	42.32				
	4.52	5.04	5.47	6.84	7.55	8.27	9.66	10.74	11.06	11.42	15.60	17.83	20.38	22.59	28.12				
13716	5.83	6.55	7.15	9.28	9.99	10.94	12.84	14.84	15.89	17.01	21.68	24.83	28.69	32.25	40.43				
	4.23	4.71	5.12	6.40	7.06	7.72	9.03	10.02	10.33	10.66	14.56	16.66	19.04	21.11	26.28				
14021	5.63	6.31	6.90	8.93	9.63	10.53	12.37	14.28	15.29	16.37	20.75	23.75	27.48	30.85	38.68	43.21			
	3.95	4.40	4.78	5.98	6.61	7.22	8.44	9.38	9.67	9.98	13.63	15.60	17.81	19.76	24.59	27.23			
14326	5.44	6.11	6.65	8.61	9.28	10.15	11.92	13.76	14.72	15.76	19.86	22.75	26.31	29.55	37.05	41.37			
	3.70	4.13	4.48	5.61	6.18	6.77	7.90	8.80	9.06	9.35	12.76	14.60	16.69	18.50	23.04	25.52			
14630	5.26	5.91	6.42	8.26	8.94	9.79	11.49	13.25	14.18	15.17	19.04	21.80	25.23	28.31	35.50	39.66	43.63		
	3.48	3.88	4.20	5.26	5.80	6.36	7.42	8.26	8.50	8.78	11.98	13.71	15.67	17.36	21.62	23.94	27.17		
14935	5.09	5.70	6.20	7.93	8.62	9.44	11.09	12.76	13.67	14.63	18.27	20.92	24.19	27.17	34.06	38.04	41.86		
	3.26	3.64	3.95	4.94	5.45	5.96	6.97	7.74	7.98	8.24	11.26	12.88	14.72	16.31	20.31	22.50	25.53		
15240	4.93	5.53	5.99	7.53	8.33	9.12	10.71	11.92	12.30	12.69	17.54	20.08	23.23	26.07	32.70	36.52	40.19		
	3.07	3.42	3.72	4.65	5.13	5.61	6.56	7.29	7.51	7.76	10.59	12.12	13.84	15.35	19.11	21.17	24.02		
15545	4.75	5.34	5.79	7.26	8.02	8.78	10.39	11.68	12.05	12.44	16.85	19.30	22.32	25.05	31.43	35.09	38.63	43.56	
	2.90	3.25	3.53	4.40	4.84	5.29	6.24	7.00	7.22	7.45	9.98	11.41	13.04	14.46	18.00	19.93	22.62	24.64	
15850	4.59	5.15	5.58	7.00	7.74	8.46	10.04	11.45	11.82	12.21	16.21	18.56	21.46	24.10	30.22	33.75	37.14	41.98	
	2.75	3.07	3.34	4.15	4.59	5.00	5.92	6.72	6.94	7.18	9.41	10.77	12.30	13.64	16.97	18.79	21.33	23.24	
16154	4.43	4.97	5.38	6.75	7.47	8.17	9.69	11.25	11.60	11.98	15.60	17.86	20.66	23.18	29.08	32.48	35.74	40.49	42.62
	2.61	2.91	3.15	3.94	4.33	4.74	5.60	6.47	6.68	6.90	8.88	10.17	11.61	12.87	16.02	17.74	20.13	21.94	23.75
16459	4.29	4.80	5.21	6.52	7.22	7.89	9.35	10.82	11.38	11.74	15.01	17.20	19.90	22.34	28.02	31.28	34.42	39.09	41.05
	2.46	2.75	2.99	3.73	4.11	4.49	5.31	6.12	6.42	6.62	8.39	9.60	10.97	12.17	15.14	16.78	19.04	20.73	22.46
16764	4.14	4.64	5.03	6.30	6.97	7.61	9.03	10.43	11.17	11.54	14.47	16.57	19.17	21.52	26.99	30.15	33.17	37.75	39.56
	2.34	2.61	2.83	3.54	3.89	4.26	5.03	5.79	6.08	6.39	7.93	9.09	10.39	11.51	14.33	15.87	18.00	19.61	21.24
17069	4.01	4.49	4.85	6.10	6.74	7.36	8.72	10.06	10.77	11.32	13.96	15.99	18.49	20.76	26.03	29.08	31.98	36.47	38.14
	2.23	2.48	2.68	3.35	3.70	4.04	4.77	5.48	5.76	6.15	7.53	8.61	9.83	10.90	13.57	15.03	17.06	18.57	20.12
17374	3.88	4.34	4.69	5.89	6.49	7.12	8.43	9.71	10.40	11.13	13.47	15.42	17.84	20.03	25.13	28.06	30.88	35.25	36.82
	2.11	2.36	2.55	3.19	3.50	3.83	4.53	5.16	5.45	5.93	7.13	8.15	9.32	10.33	12.87	14.25	16.17	17.61	19.07
17678	3.75	4.20	4.55	5.70	6.27	6.90	8.15	9.38	10.04	10.94	13.00	14.90	17.23	19.35	24.25	27.10	29.81	34.10	35.55
	2.01	2.24	2.43	3.03	3.32	3.66	4.30	4.90	5.18	5.73	6.77	7.74	8.84	9.80	12.21	13.52	15.33	16.71	18.09
17983	3.63	4.07	4.40	5.53	6.07	6.68	7.89	9.06	9.70	10.58	12.56	14.38	16.65	18.69	23.43	26.18	28.80	33.01	34.35
	1.91	2.13	2.32	2.86	3.16	3.48	4.10	4.65	4.91	5.45	6.42	7.35	8.40	9.31	11.58	12.84	14.57	15.87	17.19
18288	3.53	3.95	4.27	5.35	5.86	6.46	7.64	8.75	9.38	10.23	12.15	13.92	16.09	18.06	22.66	25.30	27.84	31.96	33.20
	1.82	2.04	2.20	2.75	3.00	3.31	3.89	4.43	4.68	5.18	6.11	6.99	7.98	8.85	11.01	12.20	13.84	15.09	16.34
18593	3.41	3.82	4.14	5.19	5.67	6.26	7.41	8.47	9.07	9.89	11.74	13.45	15.57	17.48	21.92	24.48	26.94	30.96	32.12
	1.73	1.94	2.10	2.62	2.86	3.15	3.72	4.20	4.43	4.93	5.80	6.65	7.60	8.42	10.47	11.61	13.17	14.36	15.54
18898	3.31	3.70	4.01	5.03	5.48	6.07	7.18	8.20	8.78	9.57	11.36	13.03	15.07	16.91	21.21	23.70	26.06	30.01	31.08
	1.66	1.85	1.99	2.51	2.71	3.00	3.54	4.01	4.23	4.69	5.53	6.33	7.23	8.01	9.98	11.06	12.55	13.67	14.79
19202	3.21	3.60	3.89	4.88	5.31	5.88	6.96	7.93	8.50	9.26	11.01	12.60	14.59	16.38	20.54	22.94	25.24	29.10	30.10
	1.57	1.76	1.91	2.39	2.59	2.86	3.38	3.82	4.02	4.46	5.26	6.02	6.88	7.64	9.51	10.53	11.95	13.01	14.09
19507	3.12	3.50	3.77	4.74	5.15	5.69	6.75	7.69	8.23	8.98	10.66	12.21	14.14	15.87	19.90	22.22	24.45	28.22	29.15
	1.51	1.69	1.82	2.29	2.46	2.72	3.22	3.63	3.85	4.26	5.02	5.74	6.56	7.28	9.07	10.04	11.39	12.41	13.45

ASD

METRIC LOAD TABLE/OPEN WEB STEEL JOISTS, LH-SERIES
Based on a 345 MPa Maximum Yield Strength - Loads Shown In Kilonewtons Per Meter (kN/m)

Joist Designation	36LH07	36LH08	36LH09	36LH10	36LH11	36LH12	36LH13	36LH14	36LH15	36LH16	36LH17	36LH18	36LH19	36LH20	36LH21	36LH22	36LH23	36LH24	36LH25
Depth (mm)	914	914	914	914	914	914	914	914	914	914	914	914	914	914	914	914	914	914	914
Approx. Wt. (kN/m)	0.23	0.26	0.31	0.31	0.34	0.36	0.44	0.53	0.53	0.64	0.72	0.85	0.93	1.18	1.34	1.46	1.78	1.90	2.17
Span (mm) ↓																			
10973	8.49	9.74	12.41	14.68	15.52	18.57	22.37	24.64	26.67	34.16	39.38								
	8.49	9.74	12.41	14.68	15.52	18.57	22.37	24.64	26.67	34.16	39.38								
11278	8.20	9.39	11.96	14.11	14.91	17.86	21.46	23.65	25.59	32.73	37.73	42.62							
	8.20	9.39	11.96	14.11	14.91	17.86	21.46	23.65	25.59	32.73	37.73	42.62							
11582	7.92	9.04	11.38	13.55	14.34	17.17	20.60	22.70	24.57	31.37	36.17	40.86							
	7.92	9.04	11.38	13.55	14.34	17.17	20.60	22.70	24.57	31.21	35.74	40.84							
11887	7.66	8.72	11.12	13.04	13.80	16.52	19.80	21.80	23.59	30.10	34.70	39.21							
	7.66	8.72	11.12	13.04	13.80	16.52	19.80	21.80	23.23	28.85	33.04	37.75							
12192	7.41	8.40	10.72	12.55	13.28	15.90	19.03	20.95	22.67	28.89	33.31	37.63	43.57						
	7.41	8.40	10.72	12.24	13.28	15.87	18.60	20.44	21.52	26.72	30.60	34.96	38.83						
12497	7.16	8.11	10.36	12.09	12.78	15.30	18.30	20.15	21.80	27.75	32.00	36.14	41.78						
	7.16	8.07	10.27	11.35	12.36	14.72	17.26	18.97	19.97	24.79	28.39	32.45	36.03						
12802	6.93	7.83	9.99	11.64	12.31	14.75	17.60	19.39	20.98	26.67	30.76	34.74	40.10						
	6.84	7.50	9.55	10.56	11.48	13.68	16.05	17.64	18.56	23.05	26.40	30.18	33.49						
13106	6.71	7.55	9.64	11.22	11.87	14.21	16.94	18.66	20.19	25.65	29.58	33.42	38.49						
	6.37	6.99	8.90	9.83	10.69	12.75	14.95	16.43	17.29	21.46	24.59	28.10	31.20						
13411	6.49	7.29	9.32	10.82	11.45	13.71	16.31	17.97	19.45	24.69	28.45	32.16	36.99						
	5.95	6.52	8.30	9.17	9.98	11.89	13.95	15.32	16.14	20.02	22.94	26.21	29.10						
13716	6.28	7.06	9.01	10.44	11.04	13.23	15.73	17.32	18.75	23.77	27.40	30.96	35.56						
	5.56	6.08	7.76	8.56	9.32	11.12	13.03	14.31	15.07	18.70	21.42	24.48	27.18						
14021	6.08	6.81	8.71	10.08	10.66	12.76	15.16	16.71	18.08	22.89	26.40	29.82	34.22	43.03					
	5.19	5.70	7.25	8.02	8.72	10.40	12.20	13.39	14.11	17.51	20.05	22.91	25.45	31.72					
14326	5.89	6.59	8.43	9.73	10.30	12.33	14.62	16.11	17.43	22.06	25.45	28.74	32.95	41.43					
	4.87	5.34	6.80	7.51	8.17	9.74	11.42	12.55	13.22	16.40	18.78	21.48	23.84	29.74					
14630	5.72	6.37	8.15	9.41	9.95	11.90	14.11	15.55	16.82	21.29	24.54	27.72	31.74	39.91					
	4.56	5.02	6.37	7.04	7.67	9.15	10.72	11.77	12.40	15.39	17.62	20.15	22.37	27.90					
14935	5.54	6.17	7.89	9.09	9.61	11.51	13.63	15.01	16.25	20.53	23.68	26.76	30.58	38.46	42.35				
	4.29	4.71	5.99	6.62	7.20	8.59	10.06	11.07	11.66	14.46	16.56	18.92	21.01	26.22	29.05				
15240	5.37	5.98	7.64	8.78	9.29	11.13	13.17	14.50	15.70	19.83	22.79	25.84	29.50	37.09	40.84				
	4.04	4.43	5.64	6.23	6.78	8.08	9.48	10.42	10.96	13.61	15.58	17.81	19.77	24.66	27.33				
15545	5.21	5.79	7.41	8.50	8.98	10.77	12.72	14.02	15.17	19.11	21.90	24.95	28.47	35.75	39.41				
	3.80	4.17	5.31	5.88	6.39	7.61	8.93	9.80	10.33	12.81	14.68	16.78	18.62	23.23	25.74				
15850	5.06	5.60	7.18	8.23	8.71	10.43	12.31	13.57	14.68	18.37	21.05	24.12	27.37	34.38	38.06	42.26			
	3.59	3.94	5.00	5.54	6.02	7.18	8.42	9.25	9.73	12.08	13.84	15.81	17.57	21.90	24.28	27.56			
16154	4.91	5.44	6.96	7.96	8.43	10.09	11.90	12.98	14.19	17.68	20.27	23.32	26.35	33.08	36.76	40.67			
	3.38	3.72	4.72	5.22	5.69	6.78	7.95	8.74	9.19	11.41	13.07	14.94	16.57	20.67	22.92	26.02			
16459	4.77	5.26	6.74	7.69	8.15	9.77	11.52	12.71	13.74	17.03	19.52	22.56	25.37	31.85	35.53	39.17	43.44		
	3.21	3.51	4.46	4.94	5.37	6.40	7.51	8.26	8.69	10.78	12.34	14.11	15.67	19.55	21.65	24.59	26.82		
16764	4.64	5.10	6.55	7.42	7.90	9.48	11.16	12.30	13.30	16.41	18.81	21.75	24.45	30.70	34.31	37.75	42.00		
	3.03	3.32	4.23	4.67	5.09	6.07	7.10	7.80	8.21	10.20	11.68	13.35	14.82	18.49	20.48	23.26	25.37		
17069	4.50	4.96	6.34	7.16	7.67	9.19	10.81	11.92	12.90	15.83	18.14	20.98	23.58	29.61	33.08	36.41	40.61	43.50	
	2.87	3.15	4.01	4.42	4.81	5.74	6.72	7.39	7.79	9.66	11.06	12.65	14.03	17.51	19.40	22.03	24.03	26.07	
17374	4.37	4.81	6.17	6.91	7.44	8.91	10.47	11.55	12.50	15.27	17.51	20.25	22.76	28.57	31.93	35.14	39.28	41.98	
	2.72	2.97	3.79	4.20	4.56	5.44	6.37	7.01	7.38	9.16	10.49	11.99	13.30	16.60	18.40	20.88	22.79	24.72	
17678	4.26	4.68	5.99	6.62	7.22	8.65	10.17	11.20	11.80	14.75	16.89	19.55	21.97	27.59	30.82	33.93	38.03	40.54	
	2.58	2.83	3.60	3.98	4.33	5.16	6.05	6.65	7.00	8.69	9.95	11.38	12.63	15.76	17.45	19.81	21.62	23.45	
17983	4.13	4.53	5.80	6.42	7.00	8.39	9.85	11.01	11.60	14.25	16.33	18.89	21.23	26.66	29.78	32.77	36.83	39.17	
	2.45	2.69	3.42	3.79	4.13	4.93	5.76	6.33	6.77	8.26	9.45	10.79	11.99	14.95	16.57	18.82	20.53	22.27	
18288	3.99	4.40	5.63	6.21	6.78	8.12	9.54	10.63	11.39	13.77	15.79	18.27	20.53	25.77	28.79	31.69	35.69	37.87	
	2.33	2.56	3.26	3.61	3.92	4.69	5.48	6.01	6.53	7.85	8.98	10.27	11.39	14.22	15.76	17.89	19.52	21.17	
18593	3.88	4.27	5.45	6.02	6.58	7.88	9.25	10.30	11.22	13.32	15.27	17.67	19.86	24.94	27.85	30.66	34.60	36.63	43.35
	2.23	2.45	3.12	3.44	3.75	4.48	5.23	5.72	6.33	7.47	8.55	9.77	10.84	13.52	14.98	17.01	18.57	20.13	23.46
18898	3.76	4.14	5.29	5.85	6.39	7.63	8.97	9.96	10.85	12.90	14.78	17.10	19.22	24.13	26.95	29.66	33.55	35.44	41.95
	2.13	2.33	2.97	3.28	3.59	4.26	4.99	5.44	6.02	7.10	8.14	9.31	10.33	12.88	14.27	16.21	17.68	19.17	22.34
19202	3.66	4.02	5.13	5.67	6.20	7.41	8.69	9.64	10.52	12.49	14.31	16.56	18.60	23.36	26.10	28.73	32.54	34.32	40.62
	2.04	2.23	2.84	3.13	3.41	4.07	4.77	5.19	5.74	6.77	7.74	8.85	9.83	12.27	13.60	15.44	16.85	18.27	21.27
19507	3.56	3.91	4.99	5.51	6.01	7.19	8.44	9.35	10.18	12.09	13.86	16.03	18.03	22.63	25.29	27.83	31.59	33.25	39.35
	1.95	2.13	2.71	3.00	3.26	3.89	4.55	4.94	5.47	6.46	7.39	8.44	9.38	11.70	12.97	14.72	16.06	17.42	20.30
19812	3.45	3.79	4.85	5.35	5.85	6.97	8.20	9.06	9.88	11.73	13.44	15.55	17.48	21.94	24.51	26.98	30.67	32.23	38.16
	1.86	2.04	2.61	2.87	3.12	3.72	4.34	4.71	5.22	6.15	7.06	8.07	8.96	11.17	12.37	14.05	15.33	16.62	19.36
20117	3.35	3.69	4.71	5.21	5.67	6.77	7.96	8.78	9.57	11.36	13.03	15.07	16.94	21.27	23.77	26.16	29.80	31.26	37.01
	1.78	1.95	2.49	2.74	2.99	3.54	4.15	4.50	4.99	5.88	6.74	7.70	8.55	10.66	11.82	13.42	14.63	15.87	18.50
20422	3.26	3.59	4.58	5.06	5.51	6.56	7.74	8.52	9.29	11.03	12.65	14.63	16.44	20.65	23.05	25.37	28.95	30.32	35.90
	1.70	1.86	2.37	2.62	2.86	3.38	3.98	4.30	4.77	5.61	6.43	7.35	8.17	10.20	11.29	12.82	13.99	15.17	17.67
20726	3.18	3.48	4.46	4.93	5.37	6.37	7.53	8.27	9.01	10.71	12.27	14.19	15.96	20.03	22.38	24.63	28.15	29.43	34.85
	1.63	1.79	2.29	2.52	2.74	3.23	3.82	4.13	4.55	5.38	6.15	7.03	7.82	9.74	10.79	12.27	13.38	14.50	16.89
21031	3.09	3.40	4.33	4.78	5.22	6.18	7.32	8.04	8.75	10.40	11.92	13.79	15.49	19.46	21.74	23.93	27.37	28.58	33.84
	1.56	1.72	2.18	2.40	2.62	3.10	3.66	3.94	4.36	5.15	5.89	6.74	7.48	9.32	10.33	11.73	12.79	13.89	16.18
21336	3.02	3.31	4.21	4.67	5.07	6.01	7.12	7.80	8.50	10.11	11.58	13.39	15.06	18.91	21.11	23.24	26.63	27.77	32.88
	1.50	1.64	2.10	2.32	2.52	2.97	3.50	3.77	4.17	4.93	5.64	6.45	7.16	8.93	9.89	11.23	12.25	13.29	15.48
21641	2.93	3.22	4.11	4.53	4.94	5.83	6.93	7.58	8.27	9.82	11.25	13.01	14.63	18.37	20.51	22.59	25.91	26.99	31.94
	1.44	1.59	2.01	2.21	2.42	2.84	3.37	3.60	3.99	4.71	5.39	6.17	6.85	8.56	9.48	10.77	11.74	12.74	14.84
21946	2.86	3.13	4.01	4.42	4.81	5.67	6.75	7.36	8.04	9.54	10.94	12.66	14.22	17.86	19.94	21.96	25.23	26.25	31.07
	1.38	1.51	1.94	2.13	2.32	2.72	3.23	3.45	3.83	4.52	5.18	5.92	6.58	8.20	9.09	10.31	11.26	12.21	14.22

ASD

METRIC LOAD TABLE/OPEN WEB STEEL JOISTS, LH-SERIES
Based on a 345 MPa Maximum Yield Strength - Loads Shown In Kilonewtons Per Meter (kN/m)

Joist Designation	40LH08	40LH09	40LH10	40LH11	40LH12	40LH13	40LH14	40LH15	40LH16	40LH17	40LH18	40LH19	40LH20	40LH21	40LH22	40LH23	40LH24	40LH25
Depth (mm)	1016	1016	1016	1016	1016	1016	1016	1016	1016	1016	1016	1016	1016	1016	1016	1016	1016	1016
Approx. Wt. (kN/m)	0.23	0.31	0.31	0.32	0.36	0.44	0.51	0.53	0.61	0.74	0.82	0.93	1.18	1.36	1.46	1.77	1.85	2.16
Span (mm) ↓																		
12192	7.57	10.28	12.24	12.82	15.58	18.92	21.59	24.15	28.64	34.68	39.18							
	7.57	10.28	12.24	12.82	15.58	18.92	21.59	24.15	28.64	34.68	39.18							
12497	7.35	9.95	11.82	12.40	15.06	18.25	20.82	23.30	27.59	33.42	37.73							
	7.35	9.95	11.82	12.40	15.06	18.25	20.82	23.30	27.59	33.42	37.73							
12802	7.15	9.63	11.42	11.98	14.55	17.61	20.09	22.47	26.59	32.19	36.36	42.49						
	7.15	9.63	11.42	11.98	14.55	17.61	20.09	22.47	26.59	32.19	36.36	41.94						
13106	6.93	9.34	11.04	11.58	14.06	17.00	19.39	21.70	25.62	31.04	35.06	40.89						
	6.93	9.34	11.04	11.58	14.06	17.00	19.39	21.70	25.62	30.73	35.06	39.06						
13411	6.74	9.04	10.68	11.19	13.60	16.41	18.73	20.95	24.72	29.94	33.82	39.37						
	6.74	9.04	10.68	11.19	13.60	16.41	18.73	20.95	24.72	28.67	32.77	36.44						
13716	6.53	8.77	10.33	10.82	13.16	15.86	18.09	20.24	23.86	28.89	32.63	37.92						
	6.53	8.77	10.01	10.82	13.16	15.48	17.76	19.80	21.74	26.79	30.63	34.04						
14021	6.34	8.49	9.99	10.47	12.74	15.32	17.48	19.55	23.02	27.88	31.50	36.55						
	6.34	8.49	9.36	10.15	12.36	14.49	16.62	18.53	20.34	25.07	28.66	31.85						
14326	6.17	8.23	9.67	10.14	12.33	14.81	16.91	18.91	22.24	26.94	30.44	35.25						
	6.10	7.96	8.78	9.51	11.58	13.58	15.57	17.36	19.07	23.49	26.85	29.85						
14630	5.99	7.98	9.36	9.82	11.93	14.33	16.35	18.30	21.49	26.03	29.40	34.01	42.80					
	5.72	7.47	8.24	8.93	10.87	12.74	14.60	16.28	17.89	22.03	25.20	28.02	34.99					
14935	5.83	7.74	9.07	9.51	11.55	13.86	15.81	17.70	20.78	25.15	28.42	32.85	41.32					
	5.37	7.03	7.74	8.39	10.21	11.98	13.73	15.30	16.81	20.70	23.68	26.32	32.88					
15240	5.67	7.51	8.80	9.22	11.20	13.42	15.32	17.13	20.09	24.34	27.49	31.72	39.91					
	5.06	6.61	7.28	7.89	9.61	11.26	12.91	14.40	15.81	19.48	22.28	24.76	30.93					
15545	5.51	7.29	8.52	8.94	10.85	13.00	14.82	16.59	19.43	23.55	26.60	30.66	38.57	42.46				
	4.77	6.23	6.85	7.42	9.04	10.60	12.17	13.57	14.90	18.35	20.98	23.32	29.14	32.29				
15850	5.37	7.09	8.26	8.66	10.53	12.59	14.37	16.06	18.82	22.79	25.75	29.64	37.30	41.06				
	4.49	5.86	6.46	7.00	8.53	10.01	11.47	12.79	14.05	17.30	19.78	21.99	27.48	30.45				
16154	5.22	6.88	8.01	8.40	10.21	12.20	13.92	15.57	18.22	22.08	24.94	28.67	36.07	39.72				
	4.24	5.54	6.11	6.62	8.05	9.44	10.82	12.08	13.26	16.34	18.68	20.76	25.94	28.74				
16459	5.07	6.68	7.77	8.15	9.90	11.83	13.49	15.10	17.65	21.38	24.16	27.74	34.90	38.44				
	4.01	5.23	5.77	6.26	7.61	8.93	10.24	11.41	12.53	15.44	17.65	19.62	24.51	27.17				
16764	4.94	6.50	7.55	7.92	9.61	11.47	13.09	14.65	17.10	20.72	23.42	26.86	33.79	37.21	42.33			
	3.79	4.96	5.45	5.92	7.20	8.44	9.69	10.79	11.86	14.60	16.71	18.56	23.20	25.71	29.20			
17069	4.81	6.31	7.34	7.69	9.34	11.13	12.69	14.21	16.59	20.09	22.70	26.02	32.73	36.04	40.81			
	3.59	4.69	5.18	5.60	6.82	7.99	9.17	10.23	11.23	13.83	15.81	17.58	21.96	24.34	27.65			
17374	4.69	6.14	7.12	7.47	9.07	10.79	12.33	13.79	16.09	19.49	22.02	25.21	31.72	34.93	39.40	42.90		
	3.40	4.45	4.90	5.31	6.47	7.58	8.69	9.69	10.65	13.11	15.00	16.66	20.82	23.08	26.22	28.63		
17678	4.56	5.98	6.91	7.25	8.81	10.49	11.96	13.39	15.61	18.91	21.38	24.44	30.74	33.87	38.04	41.57		
	3.22	4.21	4.65	5.04	6.14	7.19	8.26	9.20	10.11	12.44	14.22	15.81	19.76	21.90	24.88	27.17		
17983	4.45	5.82	6.72	7.04	8.56	10.18	11.63	13.00	15.14	18.27	20.75	23.70	29.82	32.85	36.76	40.29		
	3.06	4.01	4.42	4.78	5.83	6.82	7.83	8.74	9.60	11.82	13.51	15.01	18.76	20.79	23.62	25.80		
18288	4.33	5.66	6.52	6.85	8.33	9.89	11.29	12.63	14.71	17.67	20.15	22.98	28.89	31.87	35.53	39.06	42.52	
	2.91	3.80	4.20	4.55	5.54	6.49	7.45	8.30	9.12	11.23	12.84	14.28	17.83	19.77	22.46	24.53	26.63	
18593	4.23	5.51	6.31	6.66	8.09	9.61	10.97	12.28	14.30	17.08	19.57	22.24	27.94	30.92	34.36	37.90	41.14	
	2.77	3.63	3.99	4.33	5.26	6.18	7.09	7.90	8.68	10.68	12.21	13.58	16.97	18.81	21.36	23.33	25.33	
18898	4.13	5.37	6.11	6.49	7.88	9.35	10.66	11.93	13.89	16.53	19.01	21.52	27.04	30.03	33.25	36.79	39.81	
	2.64	3.45	3.80	4.13	5.02	5.88	6.74	7.53	8.26	10.17	11.63	12.93	16.15	17.90	20.34	22.22	24.12	
19202	4.02	5.22	5.92	6.31	7.67	9.09	10.37	11.61	13.49	16.00	18.49	20.84	26.19	29.17	32.20	35.71	38.55	
	2.52	3.29	3.63	3.92	4.78	5.60	6.43	7.16	7.88	9.69	11.09	12.33	15.39	17.06	19.38	21.17	22.98	
19507	3.92	5.09	5.74	6.14	7.47	8.84	10.09	11.29	13.13	15.51	17.95	20.19	25.37	28.35	31.20	34.68	37.36	
	2.40	3.13	3.45	3.75	4.56	5.34	6.12	6.84	7.51	9.25	10.56	11.74	14.68	16.27	18.49	20.18	21.92	
19812	3.82	4.96	5.57	5.98	7.26	8.61	9.82	10.98	12.76	15.04	17.39	19.57	24.59	27.48	30.25	33.69	36.20	42.86
	2.29	2.99	3.29	3.57	4.34	5.10	5.85	6.52	7.16	8.82	10.08	11.22	14.01	15.52	17.64	19.26	20.92	24.38
20117	3.70	4.84	5.35	5.82	7.09	8.36	9.57	10.71	11.79	14.57	16.87	18.98	23.84	26.64	29.33	32.76	35.11	41.57
	2.18	2.86	3.15	3.41	4.15	4.87	5.58	6.23	6.84	8.42	9.63	10.71	13.38	14.82	16.84	18.40	19.97	23.29
20422	3.60	4.71	5.21	5.66	6.88	8.12	9.31	10.39	11.61	14.15	16.37	18.41	23.14	25.86	28.45	31.85	34.06	40.33
	2.10	2.74	3.02	3.26	3.98	4.67	5.35	5.95	6.64	8.05	9.20	10.23	12.78	14.17	16.09	17.58	19.08	22.25
20726	3.51	4.59	5.06	5.51	6.69	7.90	9.04	10.08	11.44	13.73	15.89	17.87	22.46	25.10	27.62	30.98	33.06	39.15
	2.01	2.62	2.88	3.13	3.80	4.48	5.12	5.69	6.43	7.70	8.80	9.79	12.22	13.55	15.39	16.81	18.25	21.27
21031	3.41	4.46	4.93	5.37	6.52	7.70	8.80	9.79	11.26	13.33	15.42	17.35	21.81	24.37	26.82	30.15	32.10	38.01
	1.92	2.52	2.77	3.02	3.66	4.30	4.90	5.44	6.24	7.36	8.42	9.36	11.70	12.97	14.73	16.09	17.46	20.37
21336	3.32	4.34	4.80	5.22	6.34	7.50	8.56	9.51	11.10	12.95	14.98	16.85	21.19	23.67	26.06	29.34	31.20	36.93
	1.85	2.42	2.67	2.88	3.51	4.13	4.71	5.21	6.07	7.04	8.07	8.97	11.20	12.41	14.11	15.41	16.72	19.49
21641	3.23	4.24	4.68	5.09	6.18	7.29	8.33	9.23	10.96	12.59	14.56	16.38	20.59	23.01	25.33	28.57	30.32	35.90
	1.78	2.33	2.56	2.77	3.37	3.95	4.50	4.99	5.89	6.75	7.73	8.59	10.74	11.89	13.51	14.76	16.02	18.68
21946	3.16	4.13	4.56	4.96	6.02	7.10	8.11	8.98	10.65	12.24	14.17	15.93	20.02	22.37	24.63	27.83	29.47	34.89
	1.70	2.23	2.46	2.67	3.23	3.79	4.33	4.78	5.64	6.47	7.41	8.23	10.28	11.41	12.95	14.15	15.36	17.90
22250	3.07	4.02	4.45	4.84	5.86	6.93	7.90	8.74	10.36	11.90	13.77	15.49	19.48	21.75	23.94	27.11	28.67	33.94
	1.63	2.14	2.36	2.56	3.10	3.64	4.15	4.59	5.41	6.21	7.10	7.89	9.88	10.94	12.43	13.57	14.73	17.17
22555	3.00	3.92	4.33	4.71	5.72	6.75	7.70	8.50	10.08	11.58	13.41	15.07	18.95	21.17	23.30	26.42	27.90	33.02
	1.57	2.05	2.27	2.46	2.99	3.51	3.98	4.40	5.19	5.96	6.82	7.58	9.47	10.50	11.93	13.03	14.15	16.49
22860	2.93	3.83	4.23	4.59	5.57	6.58	7.51	8.27	9.82	11.28	13.04	14.68	18.44	20.60	22.69	25.75	27.15	32.15
	1.51	1.98	2.18	2.37	2.87	3.37	3.83	4.23	4.99	5.73	6.55	7.28	9.10	10.08	11.45	12.52	13.58	15.83
23165	2.86	3.73	4.13	4.49	5.44	6.42	7.32	8.05	9.55	10.98	12.71	14.28	17.96	20.06	22.09	25.13	26.44	31.30
	1.45	1.91	2.10	2.29	2.75	3.25	3.67	4.07	4.80	5.50	6.28	7.00	8.74	9.69	11.00	12.02	13.06	15.22
23470	2.80	3.64	4.02	4.37	5.31	6.26	7.15	7.85	9.31	10.69	12.37	13.92	17.49	19.54	21.52	24.51	25.75	30.50
	1.41	1.83	2.02	2.20	2.65	3.12	3.54	3.91	4.61	5.29	6.05	6.72	8.40	9.31	10.58	11.55	12.55	14.63
23774	2.72	3.56	3.92	4.27	5.18	6.11	6.97	7.64	9.07	10.42	12.05	13.57	17.04	19.04	20.97	23.91	25.10	29.71
	1.35	1.78	1.95	2.11	2.56	3.02	3.40	3.76	4.43	5.09	5.82	6.46	8.08	8.96	10.18	11.12	12.06	14.06
24079	2.67	3.48	3.82	4.17	5.04	5.96	6.80	7.45	8.84	10.15	11.76	13.22	16.62	18.56	20.44	23.35	24.45	28.96
	1.31	1.72	1.88	2.04	2.46	2.90	3.28	3.61	4.26	4.90	5.60	6.23	7.77	8.62	9.79	10.69	11.61	13.54
24384	2.59	3.40	3.72	4.07	4.93	5.82	6.64	7.26	8.62	9.90	11.45	12.88	16.19	18.09	19.93	22.79	23.86	28.23
	1.25	1.64	1.80	1.97	2.37	2.80	3.15	3.48	4.11	4.71	5.39	5.99	7.48	8.30	9.42	10.30	11.19	13.03

ASD

METRIC LOAD TABLE/OPEN WEB STEEL JOISTS, LH-SERIES
Based on a 345 MPa Maximum Yield Strength - Loads Shown In Kilonewtons Per Meter (kN/m)

Joist Designation	44LH09	44LH10	44LH11	44LH12	44LH13	44LH14	44LH15	44LH16	44LH17	44LH18	44LH19	44LH20	44LH21	44LH22	44LH23	44LH24	44LH25
Depth (mm)	1118	1118	1118	1118	1118	1118	1118	1118	1118	1118	1118	1118	1118	1118	1118	1118	1118
Approx. Wt. (kN/m)	0.28	0.31	0.32	0.36	0.44	0.45	0.53	0.61	0.69	0.83	0.93	1.20	1.36	1.47	1.72	1.85	2.15
Span (mm) ↓																	
13411	8.53	9.41	11.09	13.09	15.44	18.38	21.39	25.24	28.15	34.85	41.09						
	8.53	9.41	11.09	13.09	15.44	18.38	21.39	25.24	28.15	34.85	41.09						
13716	8.28	9.15	10.77	12.69	14.97	17.80	20.72	24.41	27.23	33.71	39.66						
	8.28	9.15	10.77	12.69	14.97	17.80	20.72	24.41	27.23	33.71	39.66						
14021	8.05	8.88	10.44	12.31	14.52	17.24	20.06	23.62	26.35	32.61	38.30						
	8.05	8.88	10.44	12.31	14.52	17.24	20.06	23.62	26.35	32.61	38.30						
14326	7.83	8.63	10.14	11.95	14.09	16.72	19.45	22.86	25.51	31.58	37.02						
	7.83	8.63	10.14	11.95	14.09	16.72	19.45	22.86	25.51	31.58	36.54						
14630	7.61	8.40	9.83	11.60	13.68	16.21	18.85	22.15	24.70	30.57	35.78						
	7.61	8.40	9.83	11.60	13.68	16.21	18.85	22.15	24.24	30.57	34.29						
14935	7.41	8.17	9.55	11.26	13.28	15.71	18.28	21.45	23.93	29.62	34.60	43.56					
	7.41	8.17	9.51	11.26	13.28	15.71	18.28	21.30	22.78	28.95	32.22	40.30					
15240	7.20	7.95	9.28	10.94	12.90	15.25	17.73	20.78	23.18	28.70	33.47	42.14					
	7.20	7.95	8.94	10.94	12.90	15.00	17.42	20.05	21.42	27.24	30.31	37.91					
15545	7.01	7.73	9.01	10.62	12.53	14.78	17.20	20.15	22.47	27.83	32.39	40.80					
	7.01	7.73	8.43	10.40	12.33	14.12	16.41	18.88	20.18	25.65	28.56	35.71					
15850	6.82	7.53	8.75	10.33	12.18	14.36	16.71	19.54	21.78	26.98	31.37	39.50	43.48				
	6.68	7.35	7.95	9.80	11.63	13.32	15.48	17.80	19.03	24.19	26.92	33.68	37.34				
16154	6.64	7.32	8.50	10.04	11.83	13.93	16.21	18.95	21.13	26.16	30.39	38.26	42.13				
	6.30	6.94	7.50	9.26	10.98	12.57	14.62	16.81	17.96	22.85	25.42	31.80	35.25				
16459	6.46	7.13	8.27	9.76	11.51	13.52	15.74	18.38	20.51	25.39	29.45	37.08	40.83				
	5.96	6.56	7.09	8.75	10.37	11.89	13.82	15.89	16.98	21.59	24.02	30.04	33.31				
16764	6.30	6.94	8.04	9.48	11.19	13.14	15.29	17.84	19.90	24.64	28.54	35.94	39.57				
	5.64	6.21	6.71	8.28	9.82	11.25	13.07	15.03	16.06	20.43	22.73	28.42	31.52				
17069	6.14	6.77	7.82	9.23	10.88	12.78	14.87	17.33	19.33	23.93	27.68	34.86	38.38				
	5.34	5.88	6.36	7.85	9.29	10.65	12.37	14.24	15.22	19.35	21.52	26.92	29.85				
17374	5.98	6.59	7.61	8.98	10.59	12.41	14.44	16.84	18.78	23.24	26.86	33.82	37.24	43.65			
	5.06	5.57	6.02	7.44	8.81	10.09	11.73	13.49	14.43	18.34	20.40	25.52	28.29	32.15			
17678	5.82	6.42	7.41	8.74	10.33	12.08	14.05	16.35	18.24	22.59	26.07	32.82	36.14	42.16			
	4.80	5.29	5.72	7.06	8.36	9.58	11.13	12.81	13.68	17.39	19.36	24.22	26.85	30.51			
17983	5.67	6.26	7.20	8.50	10.04	11.74	13.67	15.89	17.73	21.96	25.32	31.87	35.09	40.73	43.34		
	4.56	5.02	5.42	6.69	7.93	9.10	10.58	12.17	13.00	16.53	18.38	22.99	25.51	28.98	31.68		
18288	5.53	6.10	7.01	8.28	9.77	11.42	13.29	15.45	17.23	21.35	24.59	30.95	34.09	39.37	42.07		
	4.33	4.77	5.16	6.37	7.55	8.65	10.05	11.55	12.36	15.71	17.48	21.86	24.24	27.53	30.12		
18593	5.39	5.95	6.84	8.07	9.51	11.12	12.94	15.03	16.76	20.76	23.89	30.07	33.12	38.09	40.84		
	4.13	4.55	4.91	6.05	7.18	8.23	9.55	11.00	11.76	14.94	16.63	20.79	23.05	26.21	28.64		
18898	5.26	5.80	6.66	7.86	9.28	10.82	12.59	14.62	16.31	20.19	23.21	29.23	32.19	36.86	39.66		
	3.92	4.33	4.67	5.77	6.84	7.83	9.10	10.47	11.19	14.22	15.83	19.80	21.96	24.95	27.27		
19202	5.13	5.66	6.49	7.66	9.03	10.53	12.27	14.22	15.87	19.65	22.57	28.42	31.30	35.69	38.54	42.78	
	3.75	4.13	4.45	5.50	6.52	7.47	8.68	9.98	10.66	13.55	15.09	18.86	20.92	23.77	25.99	28.25	
19507	5.00	5.53	6.33	7.47	8.81	10.27	11.95	13.84	15.45	19.13	21.94	27.64	30.44	34.58	37.46	41.44	
	3.57	3.94	4.24	5.23	6.21	7.12	8.27	9.51	10.17	12.93	14.38	17.99	19.94	22.67	24.79	26.94	
19812	4.88	5.39	6.17	7.28	8.59	9.99	11.64	13.48	15.04	18.63	21.36	26.89	29.61	33.52	36.42	40.17	
	3.41	3.75	4.05	5.00	5.93	6.80	7.89	9.07	9.70	12.34	13.73	17.17	19.04	21.64	23.65	25.71	
20117	4.77	5.26	5.99	7.10	8.37	9.74	11.33	13.13	14.65	18.15	20.78	26.18	28.82	32.51	35.43	38.96	
	3.25	3.59	3.86	4.78	5.66	6.49	7.54	8.66	9.26	11.77	13.10	16.40	18.18	20.66	22.59	24.56	
20422	4.65	5.13	5.82	6.93	8.17	9.50	11.06	12.79	14.27	17.68	20.24	25.48	28.06	31.53	34.48	37.79	
	3.10	3.42	3.70	4.56	5.41	6.20	7.20	8.28	8.85	11.26	12.53	15.67	17.38	19.74	21.58	23.46	
20726	4.55	5.02	5.66	6.75	7.96	9.26	10.78	12.47	13.92	17.23	19.70	24.80	27.33	30.61	33.56	36.68	43.44
	2.97	3.28	3.54	4.36	5.18	5.92	6.88	7.92	8.47	10.77	11.98	14.98	16.62	18.88	20.65	22.44	26.16
21031	4.43	4.90	5.50	6.59	7.77	9.03	10.52	12.15	13.57	16.79	19.19	24.16	26.61	29.72	32.67	35.63	42.19
	2.84	3.13	3.38	4.17	4.96	5.67	6.59	7.58	8.11	10.30	11.47	14.34	15.90	18.06	19.76	21.46	25.04
21336	4.33	4.78	5.34	6.43	7.60	8.81	10.25	11.86	13.22	16.38	18.66	23.48	25.94	28.88	31.82	34.61	40.99
	2.72	3.00	3.23	3.99	4.74	5.42	6.31	7.26	7.76	9.86	10.97	13.73	15.22	17.30	18.91	20.56	23.97
21641	4.24	4.68	5.19	6.28	7.41	8.59	10.01	11.55	12.90	15.98	18.14	22.81	25.29	28.06	31.01	33.63	39.84
	2.61	2.87	3.10	3.83	4.55	5.21	6.05	6.96	7.44	9.45	10.52	13.16	14.59	16.57	18.12	19.70	22.97
21946	4.14	4.56	5.06	6.14	7.23	8.39	9.77	11.28	12.59	15.58	17.64	22.18	24.64	27.29	30.20	32.70	38.73
	2.51	2.75	2.97	3.67	4.36	4.99	5.80	6.66	7.13	9.06	10.08	12.60	13.98	15.89	17.38	18.88	22.02
22250	4.05	4.46	4.93	5.99	7.07	8.20	9.54	11.00	12.28	15.22	17.16	21.58	24.05	26.54	29.45	31.81	37.68
	2.40	2.64	2.86	3.53	4.18	4.78	5.56	6.40	6.84	8.69	9.67	12.09	13.41	15.25	16.66	18.12	21.13
22555	3.96	4.37	4.74	5.86	6.96	8.01	9.32	10.75	11.52	14.82	16.69	21.00	23.45	25.83	28.72	30.95	36.65
	2.30	2.53	2.74	3.38	4.01	4.59	5.34	6.14	6.56	8.34	9.28	11.61	12.87	14.63	15.99	17.39	20.28
22860	3.86	4.27	4.62	5.73	6.80	7.79	9.09	10.49	11.38	14.43	16.24	20.43	22.83	25.14	28.02	30.13	35.68
	2.21	2.45	2.64	3.26	3.86	4.40	5.13	5.91	6.39	8.01	8.91	11.14	12.36	14.05	15.36	16.69	19.48
23165	3.77	4.17	4.52	5.58	6.62	7.58	8.87	10.23	11.22	14.05	15.81	19.90	22.24	24.48	27.33	29.34	34.74
	2.13	2.36	2.55	3.13	3.70	4.24	4.94	5.69	6.21	7.70	8.56	10.71	11.87	13.49	14.76	16.05	18.70
23470	3.69	4.07	4.40	5.45	6.47	7.38	8.65	9.98	11.07	13.68	15.41	19.38	21.65	23.84	26.67	28.58	33.84
	2.05	2.26	2.45	3.02	3.59	4.07	4.75	5.47	6.05	7.39	8.23	10.30	11.42	12.97	14.19	15.42	17.99
23774	3.60	3.96	4.30	5.32	6.31	7.19	8.44	9.74	10.94	13.33	15.01	18.88	21.10	23.23	26.05	27.84	32.98
	1.98	2.18	2.36	2.91	3.44	3.91	4.58	5.28	5.91	7.12	7.92	9.90	10.98	12.49	13.64	14.84	17.30
24079	3.53	3.88	4.21	5.19	6.17	7.01	8.24	9.51	10.68	13.00	14.63	18.41	20.57	22.64	25.43	27.14	32.15
	1.91	2.10	2.29	2.80	3.32	3.77	4.42	5.07	5.69	6.84	7.61	9.54	10.58	12.01	13.13	14.27	16.65
24384	3.44	3.79	4.11	5.06	6.02	6.84	8.04	9.29	10.43	12.68	14.27	17.95	20.05	22.08	24.83	26.47	31.34
	1.85	2.02	2.20	2.69	3.21	3.63	4.26	4.90	5.48	6.59	7.34	9.17	10.18	11.57	12.65	13.74	16.03
24689	3.37	3.70	4.02	4.94	5.89	6.66	7.83	9.07	10.20	12.37	13.92	17.51	19.57	21.54	24.26	25.81	30.57
	1.78	1.95	2.13	2.61	3.09	3.50	4.10	4.72	5.29	6.34	7.06	8.84	9.80	11.14	12.18	13.23	15.44
24994	3.29	3.63	3.92	4.83	5.76	6.50	7.64	8.87	9.96	12.06	13.58	17.08	19.08	21.01	23.71	25.18	29.82
	1.72	1.89	2.04	2.51	2.99	3.37	3.95	4.56	5.12	6.12	6.81	8.52	9.45	10.74	11.74	12.76	14.88
25298	3.22	3.54	3.85	4.71	5.63	6.36	7.47	8.66	9.73	11.77	13.25	16.66	18.62	20.50	23.17	24.57	29.11
	1.66	1.82	1.98	2.42	2.88	3.25	3.80	4.40	4.93	5.89	6.56	8.21	9.10	10.34	11.32	12.30	14.34
25603	3.15	3.47	3.76	4.59	5.50	6.20	7.29	8.46	9.51	11.49	12.94	16.27	18.18	20.02	22.66	23.99	28.41
	1.60	1.76	1.91	2.33	2.78	3.13	3.67	4.24	4.77	5.69	6.33	7.92	8.78	9.98	10.91	11.86	13.83
25908	3.07	3.40	3.67	4.49	5.38	6.05	7.12	8.28	9.31	11.22	12.63	15.89	17.76	19.55	22.16	23.43	27.75
	1.54	1.70	1.85	2.26	2.69	3.02	3.54	4.11	4.61	5.48	6.11	7.64	8.47	9.63	10.53	11.45	13.35
26213	3.02	3.32	3.60	4.37	5.26	5.92	6.94	8.09	9.10	10.96	12.34	15.52	17.35	19.10	21.67	22.89	27.11
	1.50	1.64	1.79	2.17	2.61	2.91	3.41	3.96	4.45	5.29	5.89	7.38	8.18	9.29	10.17	11.06	12.90
26518	2.94	3.25	3.53	4.27	5.15	5.77	6.80	7.92	8.90	10.71	12.05	15.16	16.94	18.66	21.20	22.37	26.48
	1.44	1.60	1.73	2.10	2.52	2.81	3.31	3.83	4.30	5.12	5.70	7.13	7.90	8.98	9.82	10.68	12.44
26822	2.88	3.18	3.44	4.18	5.04	5.64	6.64	7.74	8.71	10.47	11.79	14.82	16.56	18.24	20.75	21.86	25.88
	1.40	1.54	1.67	2.02	2.43	2.72	3.19	3.72	4.15	4.94	5.50	6.88	7.63	8.68	9.48	10.31	12.02

ASD

METRIC LOAD TABLE/OPEN WEB STEEL JOISTS, LH-SERIES
Based on a 345 MPa Maximum Yield Strength - Loads Shown In Kilonewtons Per Meter (kN/m)

Joist Designation	48LH10	48LH11	48LH12	48LH13	48LH14	48LH15	48LH16	48LH17	48LH18	48LH19	48LH20	48LH21	48LH22	48LH23	48LH24	48LH25
Depth (mm)	1219	1219	1219	1219	1219	1219	1219	1219	1219	1219	1219	1219	1219	1219	1219	1219
Approx. Wt. (kN/m)	0.31	0.32	0.36	0.42	0.47	0.53	0.61	0.69	0.83	0.90	1.15	1.27	1.47	1.59	1.81	2.10
Span (mm) ↓																
14630	7.85	8.47	11.03	13.20	16.08	18.44	21.81	24.48	31.24	37.02						
	7.85	8.47	11.03	13.20	16.08	18.44	21.81	24.48	31.24	37.02						
14935	7.66	8.26	10.74	12.84	15.63	17.93	21.19	23.77	30.34	35.87						
	7.66	8.26	10.74	12.84	15.63	17.93	21.19	23.77	30.34	35.87						
15240	7.47	8.05	10.46	12.50	15.19	17.42	20.56	23.07	29.46	34.76						
	7.47	8.05	10.46	12.50	15.19	17.42	20.56	23.07	29.46	34.76						
15545	7.28	7.85	10.18	12.18	14.78	16.94	19.97	22.41	28.61	33.71	42.45					
	7.28	7.85	10.18	12.18	14.78	16.94	19.97	22.41	28.61	33.71	42.45					
15850	7.10	7.66	9.92	11.86	14.37	16.47	19.40	21.77	27.80	32.69	41.16					
	7.10	7.66	9.92	11.86	14.37	16.47	19.40	21.77	27.80	32.35	40.51					
16154	6.93	7.47	9.66	11.55	13.98	16.03	18.85	21.16	27.01	31.71	39.94					
	6.93	7.47	9.66	11.55	13.98	16.03	18.85	21.16	27.01	30.54	38.25					
16459	6.75	7.29	9.41	11.25	13.60	15.60	18.32	20.56	26.25	30.77	38.76	42.68				
	6.75	7.29	9.41	11.25	13.60	15.60	18.25	20.41	25.91	28.86	36.14	40.08				
16764	6.59	7.12	9.16	10.96	13.23	15.17	17.81	19.99	25.52	29.87	37.63	41.44				
	6.59	7.12	9.16	10.96	13.09	14.98	17.27	19.32	24.53	27.31	34.20	37.92				
17069	6.43	6.94	8.93	10.68	12.88	14.78	17.33	19.45	24.82	29.01	36.55	40.24				
	6.43	6.94	8.80	10.50	12.39	14.19	16.35	18.30	23.23	25.87	32.39	35.91				
17374	6.28	6.78	8.71	10.42	12.55	14.38	16.85	18.91	24.15	28.19	35.50	39.09				
	6.15	6.64	8.34	9.95	11.74	13.45	15.51	17.33	22.02	24.51	30.70	34.04				
17678	6.12	6.62	8.49	10.15	12.21	14.01	16.40	18.40	23.51	27.39	34.51	38.00				
	5.83	6.30	7.90	9.45	11.14	12.76	14.71	16.46	20.89	23.27	29.14	32.31				
17983	5.98	6.46	8.27	9.90	11.89	13.64	15.96	17.92	22.88	26.63	33.55	36.93	43.62			
	5.54	5.98	7.51	8.97	10.59	12.12	13.98	15.63	19.84	22.09	27.67	30.69	34.87			
18288	5.85	6.31	8.07	9.66	11.60	13.29	15.54	17.43	22.27	25.88	32.61	35.91	42.40			
	5.28	5.69	7.15	8.53	10.06	11.52	13.28	14.85	18.86	21.00	26.31	29.17	33.15			
18593	5.72	6.17	7.88	9.42	11.29	12.95	15.13	16.98	21.68	25.18	31.72	34.93	41.25	43.37		
	5.02	5.41	6.80	8.11	9.57	10.96	12.63	14.12	17.95	19.97	25.02	27.74	31.53	34.51		
18898	5.57	6.02	7.69	9.19	11.01	12.63	14.73	16.54	21.13	24.50	30.86	33.98	40.14	42.17		
	4.77	5.15	6.47	7.73	9.12	10.43	12.03	13.45	17.08	19.03	23.83	26.41	30.03	32.86		
19202	5.45	5.88	7.50	8.97	10.74	12.31	14.36	16.12	20.59	23.84	30.04	33.08	39.08	41.00		
	4.55	4.90	6.17	7.36	8.68	9.95	11.47	12.82	16.28	18.12	22.70	25.17	28.61	31.31		
19507	5.32	5.74	7.32	8.75	10.47	12.01	13.99	15.71	20.06	23.21	29.24	32.20	37.95	39.89		
	4.34	4.68	5.88	7.01	8.28	9.48	10.93	12.22	15.52	17.29	21.65	24.00	27.29	29.85		
19812	5.21	5.61	7.15	8.55	10.21	11.71	13.64	15.32	19.55	22.60	28.48	31.37	36.79	38.83		
	4.14	4.46	5.61	6.69	7.90	9.04	10.43	11.67	14.81	16.50	20.66	22.91	26.03	28.50		
20117	5.09	5.50	6.97	8.34	9.96	11.44	13.30	14.94	19.07	22.02	27.75	30.55	35.68	37.79	42.81	
	3.95	4.26	5.35	6.40	7.54	8.63	9.96	11.14	14.15	15.76	19.73	21.87	24.86	27.21	29.61	
20422	4.97	5.37	6.81	8.15	9.73	11.16	12.97	14.56	18.60	21.46	27.04	29.77	34.61	36.80	41.53	
	3.77	4.07	5.12	6.11	7.20	8.26	9.52	10.65	13.52	15.06	18.85	20.91	23.77	26.00	28.29	
20726	4.87	5.25	6.65	7.96	9.50	10.90	12.66	14.21	18.15	20.91	26.35	29.02	33.60	35.85	40.32	
	3.61	3.89	4.90	5.85	6.90	7.89	9.10	10.18	12.93	14.40	18.03	19.99	22.72	24.86	27.05	
21031	4.75	5.13	6.50	7.77	9.26	10.63	12.36	13.86	17.71	20.40	25.69	28.29	32.63	34.93	39.15	
	3.45	3.73	4.68	5.60	6.61	7.55	8.71	9.74	12.37	13.77	17.24	19.13	21.74	23.80	25.88	
21336	4.65	5.02	6.36	7.60	9.06	10.39	12.05	13.54	17.29	19.89	25.05	27.59	31.69	34.04	38.03	
	3.31	3.57	4.49	5.35	6.31	7.23	8.34	9.34	11.85	13.19	16.52	18.31	20.82	22.79	24.79	
21641	4.55	4.91	6.21	7.44	8.84	10.14	11.77	13.22	16.88	19.39	24.44	26.92	30.80	33.18	36.96	43.78
	3.18	3.42	4.30	5.13	6.05	6.93	7.99	8.94	11.35	12.63	15.83	17.55	19.94	21.83	23.75	27.71
21946	4.45	4.81	6.07	7.26	8.63	9.90	11.49	12.90	16.47	18.92	23.84	26.26	29.96	32.36	35.94	42.57
	3.05	3.28	4.13	4.91	5.80	6.65	7.66	8.56	10.88	12.12	15.17	16.82	19.13	20.92	22.76	26.57

ASD

METRIC LOAD TABLE/OPEN WEB STEEL JOISTS, LH-SERIES
Based on a 345 MPa Maximum Yield Strength - Loads Shown In Kilonewtons Per Meter (kN/m)

Joist Designation	48LH10	48LH11	48LH12	48LH13	48LH14	48LH15	48LH16	48LH17	48LH18	48LH19	48LH20	48LH21	48LH22	48LH23	48LH24	48LH25
Depth (mm)	1219	1219	1219	1219	1219	1219	1219	1219	1219	1219	1219	1219	1219	1219	1219	1219
Approx. Wt. (kN/m)	0.31	0.32	0.36	0.42	0.47	0.53	0.61	0.69	0.83	0.90	1.15	1.27	1.47	1.59	1.81	2.10
Span (mm) ↓																
22250	4.36	4.71	5.93	7.10	8.44	9.69	11.22	12.60	16.09	18.47	23.27	25.64	29.14	31.56	34.96	41.40
	2.91	3.15	3.95	4.72	5.57	6.37	7.35	8.23	10.43	11.63	14.56	16.14	18.34	20.08	21.84	25.48
22555	4.27	4.61	5.80	6.94	8.26	9.47	10.97	12.31	15.73	18.03	22.72	25.02	28.35	30.80	34.01	40.29
	2.80	3.02	3.79	4.53	5.35	6.12	7.06	7.89	10.02	11.16	13.98	15.49	17.61	19.27	20.97	24.45
22860	4.17	4.50	5.67	6.80	8.07	9.25	10.71	12.02	15.36	17.61	22.18	24.44	27.59	30.06	33.11	39.21
	2.68	2.90	3.64	4.34	5.13	5.88	6.77	7.57	9.61	10.71	13.42	14.88	16.91	18.50	20.13	23.49
23165	4.10	4.42	5.56	6.65	7.89	9.04	10.47	11.76	15.01	17.20	21.67	23.87	26.86	29.34	32.23	38.19
	2.58	2.78	3.50	4.18	4.93	5.64	6.50	7.28	9.25	10.30	12.90	14.30	16.25	17.78	19.35	22.57
23470	4.01	4.33	5.44	6.50	7.72	8.85	10.24	11.49	14.68	16.79	21.17	23.32	26.18	28.66	31.40	37.19
	2.48	2.68	3.37	4.02	4.74	5.42	6.26	7.00	8.88	9.89	12.39	13.74	15.63	17.10	18.60	21.70
23774	3.92	4.23	5.32	6.37	7.54	8.66	10.01	11.23	14.36	16.41	20.69	22.78	25.51	27.99	30.60	36.25
	2.39	2.58	3.23	3.86	4.56	5.22	6.02	6.74	8.55	9.51	11.92	13.22	15.03	16.44	17.89	20.86
24079	3.85	4.14	5.21	6.24	7.38	8.47	9.79	10.98	14.03	16.05	20.19	22.27	24.86	27.34	29.82	35.33
	2.30	2.48	3.12	3.72	4.39	5.03	5.79	6.47	8.23	9.16	11.47	12.72	14.46	15.81	17.22	20.08
24384	3.76	4.07	5.10	6.11	7.22	8.28	9.57	10.75	13.73	15.65	19.70	21.77	24.24	26.72	29.08	34.45
	2.21	2.39	3.00	3.59	4.23	4.84	5.57	6.24	7.92	8.81	11.04	12.24	13.92	15.23	16.57	19.33
24689	3.69	3.98	5.00	5.98	7.07	8.11	9.36	10.52	13.44	15.26	19.22	21.29	23.64	26.12	28.37	33.59
	2.13	2.30	2.88	3.45	4.07	4.67	5.37	6.01	7.63	8.49	10.63	11.80	13.41	14.68	15.96	18.63
24994	3.59	3.88	4.90	5.86	6.93	7.95	9.17	10.30	13.14	14.90	18.73	20.82	23.07	25.53	27.68	32.77
	2.05	2.21	2.78	3.32	3.92	4.49	5.18	5.79	7.35	8.18	10.25	11.36	12.93	14.14	15.38	17.95
25298	3.51	3.79	4.80	5.73	6.77	7.77	8.97	10.06	12.87	14.53	18.30	20.37	22.51	24.97	27.01	31.98
	1.98	2.14	2.69	3.22	3.79	4.34	5.00	5.58	7.09	7.89	9.88	10.96	12.46	13.63	14.84	17.30
25603	3.44	3.72	4.69	5.60	6.62	7.60	8.77	9.85	12.60	14.18	17.86	19.93	21.97	24.43	26.37	31.23
	1.92	2.07	2.61	3.10	3.66	4.18	4.83	5.41	6.82	7.61	9.52	10.58	12.02	13.14	14.31	16.69
25908	3.37	3.63	4.59	5.48	6.47	7.44	8.58	9.63	12.30	13.86	17.43	19.48	21.46	23.90	25.75	30.50
	1.85	1.99	2.52	3.00	3.54	4.05	4.67	5.22	6.59	7.35	9.20	10.20	11.60	12.69	13.80	16.11
26213	3.29	3.56	4.49	5.37	6.33	7.28	8.40	9.42	12.02	13.52	17.03	19.03	20.95	23.37	25.15	29.78
	1.79	1.94	2.43	2.90	3.41	3.92	4.52	5.04	6.36	7.09	8.88	9.85	11.19	12.25	13.32	15.55
26518	3.22	3.48	4.39	5.25	6.20	7.12	8.21	9.22	11.74	13.22	16.63	18.59	20.47	22.88	24.57	29.11
	1.73	1.88	2.34	2.81	3.31	3.79	4.36	4.88	6.14	6.84	8.58	9.51	10.81	11.83	12.87	15.01
26822	3.16	3.41	4.30	5.15	6.07	6.97	8.04	9.03	11.47	12.93	16.27	18.18	20.02	22.40	24.02	28.44
	1.69	1.82	2.27	2.72	3.21	3.67	4.21	4.72	5.93	6.62	8.28	9.19	10.44	11.42	12.43	14.50
27127	3.09	3.34	4.21	5.03	5.93	6.82	7.88	8.84	11.22	12.63	15.90	17.77	19.57	21.93	23.48	27.81
	1.63	1.75	2.20	2.62	3.09	3.56	4.08	4.58	5.74	6.39	8.01	8.88	10.09	11.04	12.02	14.02
27432	3.03	3.28	4.13	4.93	5.82	6.68	7.70	8.65	10.97	12.36	15.54	17.38	19.13	21.48	22.95	27.18
	1.57	1.70	2.14	2.55	3.00	3.44	3.95	4.43	5.56	6.18	7.74	8.59	9.76	10.68	11.63	13.55
27737	2.97	3.21	4.04	4.84	5.69	6.53	7.55	8.47	10.72	12.08	15.20	16.98	18.70	21.04	22.46	26.59
	1.53	1.64	2.07	2.48	2.90	3.32	3.83	4.29	5.37	5.98	7.48	8.30	9.44	10.33	11.23	13.11
28042	2.91	3.15	3.96	4.74	5.58	6.40	7.39	8.30	10.49	11.82	14.87	16.62	18.30	20.62	21.96	26.02
	1.48	1.60	2.01	2.39	2.81	3.22	3.72	4.15	5.19	5.79	7.25	8.04	9.13	9.99	10.87	12.69
28346	2.86	3.09	3.88	4.64	5.47	6.27	7.25	8.14	10.27	11.57	14.56	16.27	17.92	20.21	21.49	25.46
	1.44	1.54	1.94	2.32	2.72	3.12	3.60	4.02	5.03	5.60	7.01	7.77	8.84	9.67	10.53	12.28
28651	2.80	3.03	3.80	4.55	5.35	6.15	7.10	7.98	10.05	11.32	14.24	15.92	17.52	19.80	21.04	24.92
	1.40	1.50	1.88	2.24	2.64	3.03	3.48	3.91	4.87	5.42	6.80	7.53	8.56	9.36	10.20	11.89
28956	2.74	2.97	3.73	4.46	5.25	6.02	6.96	7.82	9.83	11.07	13.95	15.58	17.16	19.40	20.59	24.40
	1.35	1.45	1.83	2.18	2.56	2.93	3.38	3.79	4.71	5.25	6.58	7.29	8.28	9.07	9.88	11.52
29261	2.69	2.91	3.66	4.37	5.15	5.91	6.82	7.66	9.63	10.85	13.65	15.26	16.81	19.03	20.16	23.89
	1.31	1.41	1.78	2.11	2.49	2.84	3.28	3.67	4.56	5.09	6.37	7.07	8.04	8.80	9.57	11.16

American National Standard SJI 100 - 2020

STANDARD LRFD LOAD TABLE

DEEP LONGSPAN STEEL JOISTS, DLH-SERIES

Based on a 50 ksi (345 MPa) Maximum Yield Strength
Spans up to and including 144 ft. adopted by the Steel Joist Institute May 1, 2000
Spans greater than 144 ft. up to and including 240 ft. adopted by the Steel Joist Institute May 18, 2010
Revised to May 18, 2010 – Effective December, 31, 2010

The **BLACK** figures in the Load Table give the TOTAL safe factored uniformly distributed load-carrying capacities, in pounds per linear foot (kiloNewtons per meter), of **LRFD** DLH-Series Steel Joists.

The approximate joist weights, in pounds per linear foot (kiloNewtons per meter), given in the Load Table may be added to the other building weights to determine the unfactored DEAD load. In all cases the factored DEAD load, including the joist self-weight, must be deducted from the TOTAL load to determine the factored LIVE load. The approximate joist weights do not include accessories.

The **RED** figures in the Load Table represent the unfactored, uniform load, in pounds per linear foot (kiloNewtons per meter), which will produce an approximate joist deflection of 1/360 of the span. This load can be linearly prorated to obtain the unfactored, uniform load for supplementary deflection criteria (i.e. the unfactored uniform load which will produce a joist deflection of 1/240 of the span may be obtained by multiplying the **RED** figures by 360/240). In no case shall the prorated, unfactored load exceed the unfactored TOTAL load-carrying capacity of the joist as given in the Standard **ASD** Load Table for Deep Longspan Steel Joists, DLH-Series.

The Load Table applies to joists with either parallel chords or pitched top chords. Joists can have a top chord pitch up to 1/2 inch per foot (42 mm per meter). If the pitch exceeds this limit, the Load Table does not apply. When top chords are pitched, the load-carrying capacities are determined by the nominal depth of the joists at the center of the span. Sloped parallel-chord joists shall use span as defined by the length along the slope.

Where the joist span is in the **BLUE SHADED** area of the Load Table, all rows of bridging shall be diagonal bridging with bolted connections at chords and intersections. Hoisting cables shall not be released until the two rows of bridging nearest the third points are completely installed. The **BLUE SHADED** area starts after 60'–0" (18288 mm) and extends up through 100'–0" (30175 mm)

.

Where the joist span is in the **GRAY SHADED** area of the Load Table, all rows of bridging shall be diagonal bridging with bolted connections at chords and intersections. Hoisting cables shall not be released until all rows of bridging are completely installed. The **GRAY SHADED** area starts after 100'–0" (30175 mm) and extends up through 240'–0" (73152 mm).

The approximate gross moment of inertia (not adjusted for shear deformation) of a standard joist listed in the Load Table may be determined as follows:

$I_j = 26.767(W)(L^3)(10^{-6})$ in^4 or $2.6953(W)(L^3)(10^{-5})$ mm^4, where W= **RED** figure in the Load Table, and
L = (span – 0.33) in feet or (span – 102) in millimeters

Loads for span increments not explicitly given in the Load Table may be determined using linear interpolation between the load values given in adjacent span columns.

*The safe factored uniform load for the spans shown in the SAFE LOAD Column is equal to (SAFE LOAD) / (span). The TOTAL safe factored uniformly distributed load-carrying capacity, for spans less than those shown in the SAFE LOAD Column are given in the MAX LOAD Column.

To solve for an unfactored **RED** figure for spans shown in the SAFE LOAD Column (or lesser spans), multiply the unfactored **RED** figure of the shortest span shown in the Load Table by (the shortest span shown in the Load Table - 0.33 feet [101 mm])^2 and divide by (the actual span - 0.33 feet [101 mm])^2. In no case shall the calculated unfactored load exceed the unfactored TOTAL load-carrying capacity of the joist as determined from the Standard **ASD** Load Table for Deep Longspan

LRFD

STANDARD LOAD TABLE LONGSPAN STEEL JOISTS, DLH-SERIES

Based on a 50 ksi Maximum Yield Strength - Loads Shown in Pounds per Linear Foot (plf)

Joist Designation	Approx. Wt in Lbs. Per Linear Ft (Joists only)	Depth in inches	Max Load plf	SAFE LOAD* in Lbs. Between		SPAN IN FEET														
			< 62	62-89		90	91	92	93	94	95	96	97	98	99	100	101	102	103	104
52DLH10	25	52	648	40200		447 171	436 165	427 159	418 154	409 150	400 145	391 140	384 136	376 132	369 128	361 124	354 120	346 116	340 114	334 110
52DLH11	26	52	712	44130		490 187	480 181	469 174	459 169	448 164	439 158	430 153	421 149	412 144	405 140	396 135	388 132	381 128	373 124	366 120
52DLH12	29	52	794	49230		547 204	535 197	523 191	513 185	501 179	490 173	480 168	471 163	460 158	451 153	442 149	433 144	426 140	417 135	409 132
52DLH13	34	52	964	59760		664 247	649 239	636 231	621 224	609 216	595 209	583 203	571 197	559 191	549 185	537 180	526 174	516 170	507 164	496 159
52DLH14	39	52	1103	68370		760 276	745 266	729 258	714 249	699 242	685 234	670 227	657 220	645 213	631 207	619 201	607 194	595 189	585 184	573 178
52DLH15	42	52	1239	76800		853 311	835 301	817 291	799 282	783 272	766 264	750 256	735 247	720 240	705 233	691 226	676 219	664 213	651 207	639 201
52DLH16	45	52	1335	82800		921 346	901 335	882 324	862 314	844 304	826 294	810 285	792 276	777 267	760 260	745 252	730 245	717 237	702 230	688 224
52DLH17	52	52	1537	95310		1059 395	1036 381	1014 369	991 357	970 346	951 335	930 324	912 315	892 304	874 296	858 286	840 279	823 270	808 263	792 255
			<67	67-97		98	99	100	101	102	103	104	105	106	107	108	109	110	111	112
56DLH11	26	56	631	42300		432 169	424 163	415 158	408 153	400 149	393 145	385 140	379 136	372 133	366 129	358 125	352 122	346 118	340 115	334 113
56DLH12	30	56	725	48600		496 184	486 178	477 173	468 168	459 163	450 158	442 153	433 150	426 145	417 141	409 137	402 133	394 130	388 126	381 123
56DLH13	34	56	879	58860		601 223	591 216	579 209	568 204	558 197	547 191	537 186	526 181	516 175	507 171	496 166	487 161	478 157	471 152	462 149
56DLH14	39	56	993	66540		679 249	666 242	652 234	640 228	628 221	616 214	604 209	594 202	582 196	571 190	562 186	552 181	541 175	532 171	523 167
56DLH15	42	56	1135	76020		777 281	762 272	747 264	732 256	717 248	703 242	690 234	676 228	664 221	651 215	639 209	628 204	616 198	604 192	594 188
56DLH16	46	56	1224	82020		838 313	822 304	805 294	789 285	774 277	759 269	744 262	730 254	717 247	703 240	690 233	678 227	666 221	654 214	642 209
56DLH17	51	56	1411	94530		964 356	945 345	927 335	907 325	891 316	873 306	856 298	840 289	823 281	808 273	793 266	780 258	765 251	751 245	738 238
			< 71	71-99	100-105	106	107	108	109	110	111	112	113	114	115	116	117	118	119	120
60DLH12	29	60	659	46800	46800	442 168	433 163	426 158	418 154	411 150	405 146	397 142	391 138	384 134	378 131	372 128	366 124	360 121	354 118	348 115
60DLH13	35	60	801	56880	56880	537 203	526 197	517 191	508 187	499 181	490 176	483 171	474 167	466 163	459 158	451 154	444 151	436 147	429 143	423 139
60DLH14	40	60	890	63210	63210	597 216	586 210	574 205	564 199	555 193	544 189	534 183	525 178	516 173	507 170	498 165	490 161	481 156	474 152	465 149
60DLH15	43	60	1045	74190	74190	700 255	687 248	675 242	663 235	651 228	640 223	628 216	618 210	607 205	597 200	588 194	577 190	568 185	559 180	550 175
60DLH16	46	60	1149	81570	81570	769 285	756 277	741 269	727 262	714 255	702 247	690 241	676 235	666 228	654 223	642 217	631 211	621 206	610 201	600 196
60DLH17	52	60	1320	93750	93750	885 324	868 315	853 306	837 298	822 290	807 283	793 275	778 267	765 261	751 254	739 247	726 241	714 235	702 228	690 223
60DLH18	59	60	1524	108180	108180	1021 366	1002 357	984 346	966 337	948 327	931 319	915 310	898 303	883 294	867 286	852 279	838 272	823 266	810 259	796 252
			<76	76-99	100-113	114	115	116	117	118	119	120	121	122	123	124	125	126	127	128
64DLH12	31	64	594	45120	45120	396 153	388 150	382 146	376 142	370 138	364 135	358 132	352 129	346 125	342 122	336 119	331 116	327 114	321 111	316 109
64DLH13	34	64	720	54750	54750	481 186	472 181	465 176	457 171	450 168	442 163	436 159	429 155	421 152	415 148	409 144	403 141	396 137	390 134	385 131
64DLH14	40	64	825	62730	62730	550 199	540 193	531 189	523 184	514 179	505 174	498 171	489 166	481 162	474 158	466 154	459 151	451 147	444 143	438 140
64DLH15	43	64	946	71910	71910	631 234	621 228	610 223	600 217	591 211	580 206	571 201	562 196	553 191	544 187	537 182	528 177	520 173	511 170	504 165
64DLH16	46	64	1065	80940	80940	711 262	699 254	687 248	675 242	664 235	652 229	642 224	631 218	621 213	610 208	601 203	591 198	582 193	573 189	564 184
64DLH17	52	64	1227	93270	93270	819 298	804 290	790 283	777 275	763 268	751 262	738 255	726 248	714 243	702 237	691 231	681 226	669 220	658 215	648 210
64DLH18	59	64	1417	107700	107700	945 337	928 328	912 320	897 311	880 304	867 296	852 288	838 282	823 274	810 267	798 261	784 255	772 249	760 243	748 237
			< 81	81-99	100-121	122	123	124	125	126	127	128	129	130	131	132	133	134	135	136
68DLH13	37	68	650	52650	52650	432 171	426 168	418 164	412 159	406 155	400 152	394 149	388 145	382 142	378 138	372 135	366 133	361 130	355 127	351 124
68DLH14	40	68	749	60630	60630	498 184	490 179	483 175	475 171	468 167	462 163	454 159	448 155	441 152	435 148	429 145	421 141	415 138	409 135	403 133
68DLH15	44	68	839	67980	67980	558 206	547 201	540 196	531 191	522 187	514 182	505 178	498 174	490 170	483 166	475 162	468 158	462 155	454 152	448 148
68DLH16	49	68	995	80610	80610	661 242	649 236	640 230	630 225	619 219	610 214	600 209	591 204	582 199	573 195	564 190	556 186	547 182	540 178	531 174
68DLH17	55	68	1121	90840	90840	745 275	733 268	721 262	711 256	700 249	690 244	679 238	669 232	658 228	649 222	640 217	630 212	621 208	612 203	604 198
68DLH18	61	68	1298	105150	105150	862 311	849 304	835 297	823 289	810 283	798 276	786 269	774 263	762 257	751 251	739 246	729 240	718 234	708 230	697 225
68DLH19	67	68	1495	121080	121080	993 353	976 344	961 336	946 328	931 320	916 313	901 305	888 298	874 291	861 285	847 278	835 272	822 266	810 260	798 254
			< 85	85-99	100-129	130	131	132	133	134	135	136	137	138	139	140	141	142	143	144
72DLH14	41	72	694	58950	58950	454 171	447 167	441 163	435 159	427 155	421 152	415 149	411 146	405 143	399 139	393 136	388 133	382 131	378 128	372 125
72DLH15	44	72	794	67530	67530	520 191	513 187	504 183	496 178	489 174	483 171	475 167	468 163	462 160	454 156	448 152	442 150	436 147	429 143	423 140
72DLH16	50	72	918	78060	78060	601 225	592 219	585 214	576 209	567 205	559 200	552 196	544 191	537 188	529 183	522 179	514 175	507 171	501 169	493 165
72DLH17	56	72	1033	87810	87810	676 256	667 250	657 245	648 239	639 233	630 228	621 224	612 218	603 213	595 209	586 205	579 200	571 196	564 191	556 188
72DLH18	59	72	1210	102870	102870	792 289	780 283	768 276	757 270	745 265	735 258	724 252	718 247	705 242	694 236	685 231	675 227	666 222	657 217	648 212
72DLH19	70	72	1419	120600	120600	928 328	913 321	900 313	886 306	873 300	859 293	847 286	835 280	823 274	811 268	799 263	789 257	777 251	766 247	756 241

LRFD

STANDARD LOAD TABLE LONGSPAN STEEL JOISTS, LRFD DLH-SERIES

Based on a 50 ksi Maximum Yield Strength - Loads Shown in Pounds per Linear Foot (plf)

Joist Designation	Approx. Wt in Lbs. Per Linear Ft (Joists only)	Depth in inches	Max Load (plf)	SAFE LOAD* in Lbs. Between		SPAN IN FEET															
			< 81	81-99	100-111	112	115	118	121	124	127	130	133	136	139	142	145	148	151	155	160
80DLH15	40	80	966	78240	78240	699 321	663 296	632 275	602 255	575 236	549 220	525 205	503 192	482 179	461 167	443 157	425 147	408 139	392 130	371 120	347 109
80DLH16	46	80	1161	94020	94020	840 375	802 347	763 321	727 297	691 276	658 257	628 240	600 224	574 209	549 196	525 184	504 172	483 162	463 152	439 141	411 128
80DLH17	53	80	1341	108630	108630	971 451	926 416	881 386	839 358	800 332	765 309	731 288	699 269	669 252	641 235	615 221	590 207	567 195	545 183	517 169	485 154
80DLH18	60	80	1515	122760	122760	1097 516	1044 477	993 441	947 409	903 380	863 354	825 330	789 308	756 288	723 270	695 253	666 237	641 223	615 210	584 194	548 176
80DLH19	67	80	1768	143220	143220	1280 578	1218 533	1160 493	1104 458	1052 425	1005 396	960 369	918 344	878 322	840 301	806 283	774 266	743 250	714 235	677 217	635 197
80DLH20	75	80	1987	160980	160980	1446 646	1382 596	1323 552	1268 512	1211 475	1157 443	1104 412	1056 385	1011 360	968 337	927 316	891 297	855 279	821 263	780 243	731 220
			< 89	89-99	100-120	121	124	127	130	133	136	139	142	145	148	151	155	160	165	170	175
88DLH16	46	88	1048	93270	93270	771 361	735 336	701 313	671 291	642 272	615 254	591 238	567 223	545 210	524 197	503 186	477 172	448 156	422 143	398 130	376 119
88DLH17	51	88	1185	105450	105450	871 404	830 375	789 349	753 325	719 304	687 284	659 266	630 249	605 234	579 220	557 207	528 191	495 173	465 159	437 146	412 133
88DLH18	58	88	1359	120930	120930	1001 460	953 427	908 397	866 370	827 346	791 323	756 303	725 284	695 267	666 250	639 236	607 218	569 199	535 181	503 165	474 152
88DLH19	65	88	1572	139890	139890	1157 521	1101 484	1049 450	999 420	954 392	912 367	873 343	836 322	801 302	770 284	738 267	701 248	657 225	617 205	580 187	547 172
88DLH20	76	88	1808	160950	160950	1334 623	1281 579	1232 539	1184 502	1133 469	1085 438	1041 410	998 385	959 361	921 340	885 320	841 296	790 269	743 246	700 224	660 206
88DLH21	89	88	2231	198510	198510	1649 724	1568 673	1494 626	1425 584	1361 545	1301 509	1244 477	1191 447	1143 420	1097 395	1053 372	999 344	936 313	880 285	827 261	779 239
			< 97	97-99	100-129	130	133	136	139	142	145	148	151	155	160	165	170	175	180	185	190
96DLH17	52	96	1085	105270	105270	810 389	776 363	744 339	711 318	684 298	657 280	632 263	608 247	578 229	542 208	509 190	480 173	452 159	427 146	404 134	382 124
96DLH18	58	96	1222	118500	118500	912 443	875 413	839 386	803 362	770 340	740 319	713 300	686 282	653 261	615 237	579 216	546 198	516 181	488 166	463 153	438 141
96DLH19	66	96	1460	141660	141660	1091 502	1046 469	1001 438	957 410	917 385	878 361	842 340	809 320	768 296	720 269	676 246	636 224	601 206	566 189	536 174	507 161
96DLH20	74	96	1644	159420	159420	1236 569	1184 531	1131 496	1083 465	1037 436	993 409	952 385	915 362	868 336	815 305	766 277	721 254	680 233	642 214	607 196	574 181
96DLH21	90	96	2062	200010	200010	1541 698	1473 652	1410 610	1350 571	1296 535	1243 503	1196 473	1149 445	1093 412	1026 374	965 341	908 312	856 286	809 263	765 242	724 224
96DLH22	102	96	2310	224070	224070	1725 811	1662 757	1601 708	1542 663	1487 622	1436 584	1382 549	1329 517	1264 479	1188 435	1118 396	1054 362	995 332	941 305	890 281	843 259
			< 100	100-104	105-138	139	142	145	148	151	155	160	165	170	175	180	185	190	195	200	205
104DLH18	59	104	1100	1100	115470	831 426	798 400	768 375	734 353	708 332	674 307	635 279	601 255	568 233	537 213	508 195	482 180	458 167	435 154	414 142	394 132
104DLH19	67	104	1337	1337	140430	1011 484	971 453	933 426	897 401	861 377	819 349	770 317	727 289	686 265	648 242	613 222	581 204	552 189	524 175	497 162	473 150
104DLH20	75	104	1504	1504	157890	1146 548	1107 513	1071 483	1032 453	992 427	944 395	886 359	833 327	784 299	739 274	698 251	660 232	626 214	593 198	563 184	535 170
104DLH21	90	104	1890	1890	198480	1434 673	1376 632	1322 593	1271 558	1220 525	1160 486	1091 442	1028 403	970 368	917 337	866 307	821 284	779 263	740 244	703 226	668 209
104DLH22	104	104	2119	2119	222540	1607 783	1551 734	1499 689	1449 648	1401 610	1340 564	1261 513	1189 468	1121 428	1059 392	1001 359	949 331	901 306	855 283	812 262	774 244
104DLH23	109	104	2334	2334	245100	1772 819	1712 768	1644 721	1578 678	1514 638	1434 590	1348 536	1267 489	1192 447	1125 410	1062 377	1004 347	952 320	902 296	857 274	814 254
			< 100	100-112	113-147	148	151	155	160	165	170	175	180	185	190	195	200	205	210	215	220
112DLH19	67	112	1223	1223	138150	935 466	900 439	857 406	805 369	759 336	716 308	677 281	643 259	610 238	579 220	549 203	523 189	498 175	476 162	454 151	433 142
112DLH20	76	112	1384	1384	156360	1065 528	1032 497	985 459	927 418	873 381	824 348	780 319	740 293	702 270	667 249	632 231	603 213	574 198	547 184	522 171	500 160
112DLH21	91	112	1743	1743	196950	1337 650	1287 612	1223 566	1150 514	1083 469	1022 429	966 393	915 361	867 333	823 306	782 283	744 263	709 244	676 227	645 211	616 198
112DLH22	104	112	1956	1956	221010	1499 755	1451 711	1392 657	1321 598	1250 545	1181 498	1117 457	1057 419	1002 386	952 356	904 329	860 306	820 283	782 264	745 246	712 229
112DLH23	110	112	2155	2155	243540	1653 790	1601 744	1535 688	1454 625	1369 571	1288 522	1214 478	1147 439	1086 404	1030 373	977 345	928 320	882 297	839 276	800 257	763 239
112DLH24	131	112	2555	2555	288660	1956 957	1895 901	1818 834	1727 758	1631 691	1539 632	1455 579	1379 532	1307 489	1241 451	1179 418	1123 387	1070 359	1019 334	972 311	928 291
			< 100	100-120	121-165	166	170	175	180	185	190	195	200	205	210	215	220	225	230	235	240
120DLH20	77	120	1229	1229	148650	896 430	856 400	808 367	766 338	726 311	691 287	658 265	627 246	598 228	570 212	544 198	521 185	498 172	477 161	457 151	439 142
120DLH21	92	120	1528	1528	184860	1122 530	1072 494	1012 452	959 416	908 383	864 353	821 326	782 303	745 281	710 262	678 244	648 227	620 212	593 199	569 186	545 175
120DLH22	104	120	1751	1751	211920	1283 616	1235 574	1169 526	1106 483	1049 445	997 411	949 380	903 352	860 327	821 304	783 283	749 265	716 247	686 231	657 217	629 204
120DLH23	111	120	1938	1938	234480	1415 644	1361 601	1287 551	1219 506	1157 466	1099 430	1046 397	995 369	948 341	903 318	862 296	822 276	786 258	751 241	719 227	689 213
120DLH24	132	120	2298	2298	278070	1676 781	1610 728	1522 667	1441 613	1367 565	1300 521	1237 482	1177 447	1122 414	1070 386	1022 359	977 335	934 313	894 293	857 275	821 258
120DLH25	152	120	2633	2633	318630	1926 915	1847 853	1748 782	1656 718	1571 661	1492 610	1418 564	1350 523	1287 485	1228 452	1173 421	1122 393	1073 367	1026 344	983 322	943 302

LRFD

METRIC LOAD TABLE LONGSPAN STEEL JOISTS, DLH-SERIES

Based on 345 MPa Maximum Yield Strength - Loads Shown in Kilonewtons per Meter (kN/m)

Joist Designation	Approx. Wt in kN Per Meter (Joists only)	Depth in mm	Max Load kN/m	SAFE LOAD* in kN Between		SPAN IN MILLIMETERS														
			<18898	18898-27127		27432	27737	28042	28346	28651	28956	29261	29566	29870	30175	30480	30785	31090	31394	31699
52DLH10	0.36	1321	9.45	178.81		6.52	6.37	6.23	6.10	5.97	5.84	5.71	5.60	5.49	5.38	5.27	5.16	5.05	4.96	4.88
						2.49	2.40	2.32	2.24	2.18	2.11	2.04	1.98	1.92	1.86	1.80	1.75	1.69	1.66	1.60
52DLH11	0.38	1321	10.39	196.30		7.15	7.00	6.85	6.69	6.54	6.41	6.28	6.15	6.01	5.91	5.77	5.66	5.56	5.45	5.34
						2.72	2.64	2.53	2.46	2.39	2.30	2.23	2.17	2.10	2.04	1.97	1.92	1.86	1.80	1.75
52DLH12	0.42	1321	11.59	218.98		7.99	7.81	7.63	7.48	7.31	7.15	7.00	6.87	6.72	6.58	6.45	6.32	6.21	6.08	5.97
						2.97	2.87	2.78	2.69	2.61	2.52	2.45	2.37	2.30	2.23	2.17	2.10	2.04	1.97	1.92
52DLH13	0.50	1321	14.07	265.82		9.69	9.47	9.28	9.06	8.88	8.69	8.51	8.34	8.16	8.01	7.83	7.68	7.53	7.39	7.24
						3.60	3.48	3.37	3.26	3.15	3.05	2.96	2.87	2.78	2.69	2.62	2.53	2.48	2.39	2.32
52DLH14	0.57	1321	16.10	304.12		11.09	10.87	10.63	10.42	10.20	10.00	9.78	9.58	9.41	9.21	9.04	8.86	8.69	8.53	8.36
						4.02	3.88	3.76	3.63	3.53	3.41	3.31	3.21	3.10	3.02	2.93	2.83	2.75	2.68	2.59
52DLH15	0.61	1321	18.08	341.62		12.45	12.19	11.93	11.66	11.42	11.18	10.94	10.72	10.50	10.28	10.09	9.87	9.69	9.50	9.32
						4.53	4.39	4.24	4.11	3.96	3.85	3.73	3.60	3.50	3.40	3.29	3.19	3.10	3.02	2.93
52DLH16	0.66	1321	19.48	368.31		13.44	13.15	12.87	12.58	12.32	12.06	11.82	11.55	11.33	11.09	10.87	10.66	10.46	10.24	10.04
						5.04	4.88	4.72	4.58	4.43	4.29	4.15	4.02	3.89	3.79	3.67	3.57	3.45	3.35	3.26
52DLH17	0.76	1321	22.43	423.96		15.45	15.12	14.79	14.46	14.16	13.87	13.57	13.30	13.02	12.76	12.52	12.25	12.01	11.79	11.55
						5.76	5.56	5.38	5.21	5.04	4.88	4.72	4.59	4.43	4.31	4.17	4.07	3.94	3.83	3.72
			<20422	20422-29566		29870	30175	30480	30785	31090	31394	31699	32004	32309	32614	32918	33223	33528	33833	34138
56DLH11	0.38	1422	9.21	188.15		6.30	6.19	6.06	5.95	5.84	5.73	5.62	5.53	5.42	5.34	5.23	5.14	5.05	4.96	4.88
						2.46	2.37	2.30	2.23	2.17	2.11	2.04	1.98	1.94	1.88	1.82	1.78	1.72	1.67	1.64
56DLH12	0.44	1422	10.58	216.18		7.24	7.09	6.96	6.82	6.69	6.56	6.45	6.32	6.21	6.08	5.97	5.86	5.75	5.66	5.56
						2.68	2.59	2.52	2.45	2.37	2.30	2.23	2.18	2.11	2.05	1.99	1.94	1.89	1.83	1.79
56DLH13	0.50	1422	12.82	261.82		8.77	8.62	8.44	8.29	8.14	7.99	7.83	7.68	7.53	7.39	7.24	7.11	6.98	6.87	6.74
						3.25	3.15	3.05	2.97	2.87	2.78	2.71	2.64	2.55	2.49	2.42	2.34	2.29	2.21	2.17
56DLH14	0.57	1422	14.49	295.98		9.91	9.71	9.52	9.34	9.17	8.99	8.82	8.66	8.49	8.34	8.20	8.05	7.90	7.77	7.63
						3.63	3.53	3.41	3.32	3.22	3.12	3.05	2.94	2.86	2.77	2.71	2.64	2.55	2.49	2.43
56DLH15	0.61	1422	16.57	338.15		11.33	11.12	10.90	10.68	10.46	10.26	10.06	9.87	9.69	9.50	9.32	9.17	8.99	8.82	8.66
						4.10	3.96	3.85	3.73	3.61	3.53	3.41	3.32	3.22	3.13	3.05	2.97	2.88	2.80	2.74
56DLH16	0.67	1422	17.86	364.84		12.23	11.99	11.75	11.51	11.29	11.07	10.85	10.66	10.46	10.26	10.06	9.89	9.71	9.54	9.36
						4.56	4.43	4.29	4.15	4.04	3.92	3.82	3.70	3.60	3.50	3.40	3.31	3.22	3.12	3.05
56DLH17	0.74	1422	20.59	420.49		14.07	13.79	13.52	13.24	13.00	12.74	12.49	12.25	12.01	11.79	11.58	11.38	11.16	10.96	10.77
						5.19	5.03	4.88	4.74	4.61	4.46	4.34	4.21	4.10	3.98	3.88	3.76	3.66	3.57	3.47
			<21641	21641-30175	30480-32004	32309	32614	32918	33223	33528	33833	34138	34442	34747	35052	35357	35662	35966	36271	36576
60DLH12	0.42	1524	9.62	208.17	208.17	6.45	6.32	6.21	6.10	5.99	5.91	5.80	5.71	5.60	5.51	5.42	5.34	5.25	5.16	5.07
						2.45	2.37	2.3	2.24	2.18	2.13	2.07	2.01	1.95	1.91	1.86	1.80	1.76	1.72	1.67
60DLH13	0.51	1524	11.68	253.01	253.01	7.83	7.68	7.55	7.42	7.28	7.15	7.04	6.91	6.80	6.69	6.58	6.47	6.37	6.26	6.17
						2.96	2.87	2.78	2.72	2.64	2.56	2.49	2.43	2.37	2.30	2.24	2.20	2.14	2.08	2.02
60DLH14	0.58	1524	12.99	281.17	281.17	8.71	8.55	8.38	8.23	8.09	7.94	7.79	7.66	7.53	7.39	7.26	7.15	7.02	6.91	6.78
						3.15	3.06	2.99	2.90	2.81	2.75	2.67	2.59	2.52	2.48	2.40	2.34	2.27	2.21	2.17
60DLH15	0.63	1524	15.25	330.01	330.01	10.22	10.02	9.85	9.67	9.50	9.34	9.17	9.01	8.86	8.71	8.58	8.42	8.29	8.16	8.03
						3.72	3.61	3.53	3.42	3.32	3.25	3.15	3.06	2.99	2.91	2.83	2.77	2.69	2.62	2.55
60DLH16	0.67	1524	16.76	362.84	362.84	11.23	11.03	10.81	10.61	10.42	10.24	10.06	9.87	9.71	9.54	9.36	9.21	9.06	8.90	8.75
						4.15	4.04	3.92	3.82	3.72	3.60	3.51	3.42	3.32	3.25	3.16	3.07	3.00	2.93	2.86
60DLH17	0.76	1524	19.26	417.02	417.02	12.91	12.67	12.45	12.21	11.99	11.77	11.58	11.36	11.16	10.96	10.79	10.59	10.42	10.24	10.06
						4.72	4.59	4.46	4.34	4.23	4.13	4.01	3.89	3.80	3.70	3.60	3.51	3.42	3.32	3.25
60DLH18	0.86	1524	22.24	481.20	481.20	14.90	14.62	14.36	14.09	13.83	13.59	13.35	13.11	12.89	12.65	12.43	12.23	12.01	11.82	11.62
						5.34	5.21	5.04	4.91	4.77	4.65	4.52	4.42	4.29	4.17	4.07	3.96	3.88	3.77	3.67
			<23166	23165-30175	30480-34442	34747	35052	35357	35662	35966	36271	36576	36881	37186	37490	37795	38100	38405	38710	39014
64DLH12	0.45	1626	8.66	200.70	200.70	5.77	5.66	5.58	5.49	5.40	5.31	5.23	5.14	5.05	4.99	4.90	4.83	4.77	4.68	4.61
						2.23	2.18	2.13	2.07	2.01	1.97	1.92	1.88	1.82	1.78	1.73	1.69	1.66	1.61	1.59
64DLH13	0.50	1626	10.50	243.54	243.54	7.02	6.89	6.78	6.67	6.56	6.45	6.37	6.26	6.15	6.06	5.97	5.88	5.77	5.69	5.62
						2.71	2.64	2.56	2.49	2.45	2.37	2.32	2.26	2.21	2.15	2.10	2.05	1.99	1.95	1.91
64DLH14	0.58	1626	12.03	279.03	279.03	8.03	7.88	7.74	7.63	7.50	7.37	7.26	7.13	7.02	6.91	6.80	6.69	6.58	6.47	6.39
						2.90	2.81	2.75	2.68	2.61	2.53	2.49	2.42	2.36	2.30	2.24	2.20	2.14	2.08	2.04
64DLH15	0.63	1626	13.81	319.87	319.87	9.21	9.06	8.90	8.75	8.62	8.47	8.34	8.20	8.07	7.94	7.83	7.70	7.59	7.46	7.35
						3.41	3.32	3.25	3.16	3.07	3.00	2.93	2.86	2.78	2.72	2.65	2.58	2.52	2.48	2.40
64DLH16	0.67	1626	15.54	360.03	360.03	10.37	10.20	10.02	9.85	9.69	9.52	9.36	9.21	9.06	8.90	8.77	8.62	8.49	8.36	8.23
						3.82	3.70	3.61	3.53	3.42	3.34	3.26	3.18	3.10	3.03	2.96	2.88	2.81	2.75	2.68
64DLH17	0.76	1626	17.90	414.88	414.88	11.95	11.73	11.53	11.33	11.14	10.96	10.77	10.59	10.42	10.24	10.09	9.93	9.76	9.61	9.45
						4.34	4.23	4.13	4.01	3.91	3.82	3.72	3.61	3.54	3.45	3.37	3.29	3.21	3.13	3.06
64DLH18	0.86	1626	20.68	479.07	479.07	13.79	13.55	13.30	13.09	12.84	12.65	12.43	12.23	12.01	11.82	11.64	11.44	11.27	11.09	10.92
						4.91	4.78	4.67	4.53	4.43	4.31	4.20	4.11	3.99	3.89	3.80	3.72	3.63	3.54	3.45
			<24689	24689-30175	30480-36881	37186	37490	37795	38100	38405	38710	39014	39319	39624	39929	40234	40538	40843	41148	41453
68DLH13	0.54	1727	9.49	234.19	234.19	6.30	6.21	6.10	6.01	5.93	5.84	5.75	5.66	5.58	5.51	5.42	5.34	5.27	5.18	5.12
						2.49	2.45	2.39	2.32	2.26	2.21	2.17	2.11	2.07	2.01	1.97	1.94	1.89	1.85	1.80
68DLH14	0.58	1727	10.93	269.69	269.69	7.26	7.15	7.04	6.93	6.82	6.74	6.63	6.54	6.43	6.34	6.26	6.15	6.06	5.97	5.88
						2.68	2.61	2.55	2.49	2.43	2.37	2.32	2.26	2.21	2.15	2.11	2.05	2.01	1.97	1.94
68DLH15	0.64	1727	12.25	302.39	302.39	8.14	7.99	7.88	7.74	7.61	7.50	7.37	7.26	7.15	7.04	6.93	6.82	6.74	6.63	6.54
						3.00	2.93	2.86	2.78	2.72	2.65	2.59	2.53	2.48	2.42	2.36	2.30	2.26	2.21	2.15
68DLH16	0.72	1727	14.52	358.57	358.57	9.65	9.47	9.34	9.19	9.04	8.90	8.75	8.62	8.49	8.36	8.23	8.12	7.99	7.88	7.74
						3.53	3.44	3.35	3.28	3.19	3.12	3.05	2.97	2.90	2.84	2.77	2.71	2.65	2.59	2.53
68DLH17	0.80	1727	16.36	404.07	404.07	10.87	10.70	10.52	10.37	10.22	10.06	9.91	9.76	9.61	9.47	9.34	9.19	9.06	8.93	8.82
						4.01	3.91	3.82	3.73	3.63	3.56	3.47	3.38	3.32	3.23	3.16	3.09	3.03	2.96	2.88
68DLH18	0.89	1727	18.95	467.73	467.73	12.58	12.39	12.19	12.01	11.82	11.64	11.47	11.29	11.12	10.96	10.79	10.63	10.48	10.33	10.17
						4.53	4.43	4.33	4.21	4.13	4.02	3.92	3.83	3.75	3.66	3.59	3.50	3.41	3.35	3.28
68DLH19	0.98	1727	21.82	538.59	538.59	14.49	14.25	14.03	13.81	13.59	13.37	13.15	12.95	12.76	12.56	12.36	12.19	11.99	11.82	11.64
						5.15	5.02	4.90	4.78	4.67	4.56	4.45	4.34	4.24	4.15	4.05	3.96	3.88	3.79	3.70
			<25908	25908-30175	30480-39319	39624	39929	40234	40538	40843	41148	41453	41758	42062	42367	42672	42977	43282	43586	43891
72DLH14	0.60	1829	10.13	262.22	262.22	6.63	6.52	6.43	6.34	6.23	6.15	6.06	5.99	5.91	5.82	5.73	5.66	5.58	5.51	5.42
						2.49	2.43	2.37	2.32	2.26	2.21	2.17	2.13	2.08	2.02	1.98	1.94	1.91	1.86	1.82
72DLH15	0.64	1829	11.59	300.38	300.38	7.59	7.48	7.35	7.24	7.13	7.04	6.93	6.82	6.74	6.63	6.54	6.45	6.37	6.26	6.17
						2.78	2.72	2.67	2.59	2.53	2.49	2.43	2.37	2.33	2.27	2.21	2.18	2.14	2.08	2.04
72DLH16	0.73	1829	13.39	347.22	347.22	8.77	8.64	8.53	8.40	8.27	8.16	8.05	7.94	7.83	7.72	7.61	7.50	7.39	7.31	7.20
						3.28	3.19	3.12	3.05	2.99	2.91	2.86	2.78	2.74	2.67	2.61	2.55	2.49	2.46	2.40
72DLH17	0.82	1829	15.08	390.59	390.59	9.87	9.74	9.58	9.45	9.32	9.19	9.06	8.93	8.80	8.69	8.55	8.44	8.34	8.23	8.12
						3.73	3.64	3.57	3.48	3.40	3.32	3.26	3.18	3.10	3.05	2.99	2.91	2.86	2.78	2.74
72DLH18	0.86	1829	17.66	457.58	457.58	11.55	11.38	11.20	11.05	10.87	10.72	10.57	10.48	10.28	10.13	10.00	9.85	9.71	9.58	9.45
						4.21	4.13	4.02	3.94	3.86	3.76	3.67	3.60	3.53	3.44	3.37	3.31	3.23	3.16	3.09
72DLH19	1.02	1829	20.70	536.45	536.45	13.55	13.33	13.13	12.93	12.74	12.54	12.36	12.19	12.01	11.84	11.66	11.51	11.33	11.18	11.03
						4.78	4.68	4.56	4.46	4.37	4.27	4.17	4.08	3.99	3.91	3.83	3.75	3.66	3.60	3.51

LRFD

METRIC LOAD TABLE LONGSPAN STEEL JOISTS, LRFD DLH-SERIES

Based on 345 MPa Maximum Yield Strength - Loads Shown in Kilonewtons per Meter (kN/m)

Joist Designation	Approx. Wt in Kn Per Meter (Joists only)	Depth in mm	Max Load (kN/m)	SAFE LOAD* in kN Between		SPAN IN MILLIMETERS														
			<24689	24689-30175	30480-33833	34138	35052	35966	36881	37795	38710	39624	40538	41453	42367	43282	44196	45110	46025	47244	48768
80DLH15	0.58	2032	14.09	348.02	348.02	10.20	9.67	9.21	8.77	8.38	8.01	7.66	7.33	7.02	6.72	6.45	6.19	5.95	5.71	5.42	5.07
						4.68	4.31	4.01	3.72	3.44	3.21	2.99	2.80	2.61	2.43	2.29	2.14	2.02	1.89	1.75	1.59
80DLH16	0.67	2032	16.94	418.22	418.22	12.25	11.71	11.14	10.61	10.09	9.61	9.17	8.75	8.38	8.01	7.66	7.35	7.04	6.76	6.41	5.99
						5.47	5.06	4.68	4.33	4.02	3.75	3.50	3.26	3.05	2.86	2.68	2.51	2.36	2.21	2.05	1.86
80DLH17	0.77	2032	19.57	483.21	483.21	14.16	13.50	12.84	12.23	11.66	11.16	10.66	10.20	9.76	9.34	8.97	8.60	8.27	7.94	7.55	7.08
						6.58	6.07	5.63	5.22	4.84	4.50	4.20	3.92	3.67	3.42	3.22	3.02	2.84	2.67	2.46	2.24
80DLH18	0.88	2032	22.15	546.06	546.06	16.00	15.23	14.49	13.81	13.17	12.58	12.03	11.51	11.03	10.55	10.13	9.71	9.34	8.97	8.53	8.00
						7.53	6.96	6.43	5.96	5.54	5.16	4.81	4.49	4.20	3.94	3.69	3.45	3.25	3.06	2.83	2.56
80DLH19	0.98	2032	25.80	637.07	637.07	18.67	17.77	16.92	16.11	15.34	14.66	14.01	13.39	12.80	12.25	11.75	11.29	10.83	10.42	9.88	9.27
						8.43	7.77	7.19	6.68	6.20	5.77	5.38	5.02	4.69	4.39	4.13	3.88	3.64	3.42	3.16	2.87
80DLH20	1.09	2032	29.00	716.07	716.07	21.10	20.16	19.30	18.49	17.66	16.87	16.11	15.41	14.75	14.11	13.52	13.00	12.47	11.97	11.38	10.67
						9.42	8.69	8.05	7.47	6.93	6.46	6.01	5.61	5.25	4.91	4.61	4.33	4.07	3.83	3.54	3.21
			<27127	27127-30175	30480-36576	36881	37795	38710	39624	40538	41453	42367	43282	44196	45110	46025	47244	48768	50292	51816	53340
88DLH16	0.67	2235	15.30	414.88	414.88	11.25	10.72	10.22	9.78	9.36	8.97	8.62	8.27	7.94	7.63	7.33	6.96	6.54	6.16	5.81	5.49
						5.26	4.90	4.56	4.24	3.96	3.70	3.47	3.25	3.06	2.87	2.71	2.51	2.27	2.08	1.89	1.73
88DLH17	0.74	2235	17.29	469.06	469.06	12.71	12.10	11.51	10.98	10.48	10.02	9.61	9.19	8.82	8.44	8.12	7.70	7.22	6.78	6.38	6.01
						5.89	5.47	5.09	4.74	4.43	4.14	3.88	3.63	3.41	3.21	3.02	2.78	2.52	2.32	2.13	1.94
88DLH18	0.85	2235	19.83	537.92	537.92	14.60	13.90	13.24	12.63	12.06	11.53	11.03	10.57	10.13	9.71	9.32	8.86	8.31	7.81	7.34	6.91
						6.71	6.23	5.79	5.39	5.04	4.71	4.42	4.14	3.89	3.64	3.44	3.18	2.90	2.64	2.40	2.21
88DLH19	0.95	2235	22.94	622.26	622.26	16.87	16.06	15.30	14.57	13.92	13.30	12.74	12.19	11.68	11.23	10.77	10.23	9.58	9.01	8.47	7.99
						7.60	7.06	6.56	6.12	5.72	5.35	5.00	4.69	4.40	4.14	3.89	3.61	3.28	2.99	2.72	2.51
88DLH20	1.11	2235	26.39	715.94	715.94	19.46	18.69	17.97	17.27	16.52	15.82	15.19	14.55	13.98	13.44	12.91	12.28	11.53	10.85	10.22	9.63
						9.09	8.44	7.86	7.32	6.84	6.39	5.98	5.61	5.26	4.96	4.67	4.31	3.92	3.59	3.26	3.00
88DLH21	1.30	2235	32.56	883.14	883.14	24.05	22.87	21.80	20.79	19.85	18.97	18.14	17.38	16.68	16.00	15.36	14.57	13.65	12.84	12.07	11.37
						10.56	9.82	9.13	8.52	7.95	7.42	6.96	6.52	6.12	5.76	5.42	5.02	4.56	4.15	3.80	3.48
			<29566	29566-30175	30480-39319	39624	40538	41453	42367	43282	44196	45110	46025	47244	48768	50292	51816	53340	54864	56388	57912
96DLH17	0.76	2438	15.84	468.26	468.26	11.82	11.31	10.85	10.37	9.98	9.58	9.21	8.86	8.44	7.91	7.43	7.00	6.60	6.23	5.90	5.58
						5.67	5.29	4.94	4.64	4.34	4.08	3.83	3.60	3.34	3.03	2.77	2.52	2.32	2.13	1.95	1.80
96DLH18	0.85	2438	17.84	527.11	527.11	13.30	12.76	12.23	11.71	11.23	10.79	10.39	10.00	9.53	8.97	8.44	7.96	7.53	7.12	6.76	6.39
						6.46	6.02	5.63	5.28	4.96	4.65	4.37	4.11	3.80	3.45	3.15	2.88	2.64	2.42	2.23	2.05
96DLH19	0.96	2438	21.31	630.13	630.13	15.91	15.25	14.60	13.96	13.37	12.80	12.28	11.79	11.20	10.50	9.87	9.28	8.77	8.26	7.82	7.39
						7.32	6.84	6.39	5.98	5.61	5.26	4.96	4.67	4.31	3.92	3.59	3.26	3.00	2.75	2.53	2.34
96DLH20	1.08	2438	23.99	709.13	709.13	18.03	17.27	16.50	15.80	15.12	14.49	13.90	13.35	12.67	11.90	11.18	10.52	9.93	9.36	8.86	8.38
						8.30	7.74	7.23	6.78	6.36	5.96	5.61	5.28	4.90	4.45	4.04	3.70	3.40	3.12	2.86	2.64
96DLH21	1.31	2438	30.09	889.68	889.68	22.48	21.49	20.57	19.70	18.91	18.14	17.44	16.76	15.95	14.97	14.09	13.25	12.49	11.81	11.16	10.57
						10.18	9.51	8.90	8.33	7.80	7.34	6.90	6.49	6.01	5.45	4.97	4.55	4.17	3.83	3.53	3.26
96DLH22	1.49	2438	33.71	996.71	996.71	25.17	24.25	23.35	22.50	21.69	20.94	20.16	19.39	18.45	17.33	16.32	15.38	14.52	13.74	12.99	12.30
						11.83	11.04	10.33	9.67	9.07	8.52	8.01	7.54	6.99	6.34	5.77	5.28	4.84	4.45	4.10	3.77
			<30480	30480-31699	32004-42062	42367	43282	44196	45110	46025	47244	48768	50292	51816	53340	54864	56388	57912	59436	60960	62484
104DLH18	0.86	2642	16.06	16.06	513.63	12.12	11.64	11.20	10.70	10.33	9.84	9.27	8.77	8.29	7.83	7.42	7.04	6.69	6.34	6.04	5.75
						6.21	5.83	5.47	5.15	4.84	4.48	4.07	3.72	3.40	3.10	2.84	2.62	2.43	2.24	2.07	1.92
104DLH19	0.98	2642	19.51	19.51	624.66	14.75	14.16	13.61	13.09	12.56	11.95	11.24	10.61	10.01	9.45	8.95	8.48	8.05	7.65	7.26	6.91
						7.06	6.61	6.21	5.85	5.50	5.09	4.62	4.21	3.86	3.53	3.23	2.97	2.75	2.55	2.36	2.18
104DLH20	1.09	2642	21.95	21.95	702.32	16.72	16.15	15.63	15.06	14.46	13.78	12.93	12.16	11.44	10.79	10.19	9.63	9.14	8.66	8.22	7.81
						7.99	7.48	7.04	6.61	6.23	5.76	5.23	4.77	4.36	3.99	3.66	3.38	3.12	2.88	2.68	2.48
104DLH21	1.31	2642	27.58	27.58	882.88	20.92	20.07	19.28	18.54	17.79	16.93	15.92	15.00	14.16	13.38	12.64	11.98	11.37	10.80	10.26	9.75
						9.82	9.22	8.65	8.14	7.66	7.09	6.45	5.88	5.37	4.91	4.48	4.14	3.83	3.56	3.29	3.05
104DLH22	1.52	2642	30.93	30.93	989.90	23.44	22.63	21.86	21.14	20.44	19.56	18.41	17.35	16.36	15.45	14.61	13.85	13.15	12.47	11.85	11.29
						11.42	10.71	10.05	9.45	8.90	8.23	7.48	6.82	6.24	5.72	5.23	4.83	4.46	4.13	3.82	3.56
104DLH23	1.59	2642	34.06	34.06	1090.00	25.85	24.97	23.99	23.02	22.08	20.97	19.67	18.49	17.40	16.41	15.49	14.65	13.90	13.17	12.51	11.88
						11.95	11.20	10.52	9.89	9.31	8.61	7.82	7.13	6.52	5.98	5.50	5.06	4.67	4.31	3.99	3.70
			<30480	30480-34138	34442-44806	45110	46025	47244	48768	50292	51816	53340	54864	56388	57912	59436	60960	62484	64008	65532	67056
112DLH19	0.98	2845	17.85	17.85	614.52	13.63	13.13	12.51	11.75	11.07	10.45	9.88	9.39	8.90	8.44	8.01	7.63	7.26	6.95	6.63	6.32
						6.80	6.40	5.92	5.38	4.90	4.49	4.10	3.77	3.47	3.21	2.96	2.75	2.55	2.36	2.20	2.07
112DLH20	1.11	2845	20.20	20.20	695.52	15.54	15.06	14.38	13.52	12.74	12.03	11.38	10.80	10.24	9.74	9.23	8.80	8.38	7.99	7.61	7.30
						7.70	7.25	6.69	6.10	5.56	5.07	4.65	4.27	3.94	3.63	3.37	3.10	2.88	2.68	2.49	2.33
112DLH21	1.33	2845	25.43	25.43	876.07	19.50	18.78	17.85	16.79	15.80	14.92	14.09	13.35	12.65	12.01	11.41	10.85	10.35	9.87	9.41	8.99
						9.48	8.93	8.26	7.50	6.84	6.26	5.73	5.26	4.85	4.46	4.13	3.83	3.56	3.31	3.07	2.88
112DLH22	1.52	2845	28.54	28.54	983.10	21.86	21.16	20.31	19.28	18.24	17.24	16.30	15.43	14.62	13.90	13.20	12.55	11.97	11.41	10.87	10.39
						11.01	10.37	9.58	8.72	7.95	7.26	6.66	6.11	5.63	5.19	4.80	4.46	4.13	3.85	3.59	3.34
112DLH23	1.61	2845	31.45	31.45	1083.00	24.12	23.35	22.40	21.22	19.98	18.80	17.72	16.74	15.84	15.03	14.26	13.55	12.87	12.25	11.68	11.14
						11.52	10.85	10.04	9.12	8.33	7.61	6.97	6.40	5.89	5.44	5.03	4.67	4.33	4.02	3.75	3.48
112DLH24	1.91	2845	37.29	37.29	1284.00	28.54	27.64	26.53	25.21	23.80	22.46	21.23	20.13	19.08	18.11	17.20	16.39	15.62	14.87	14.18	13.55
						13.96	13.14	12.17	11.06	10.08	9.22	8.44	7.76	7.13	6.58	6.10	5.64	5.23	4.87	4.53	4.24
			<30480	30480-36576	36881-50292	50597	51816	53340	54864	56388	57912	59436	60960	62484	64008	65532	67056	68580	70104	71628	73152
120DLH20	1.12	3048	17.94	17.94	661.22	13.06	12.49	11.79	11.18	10.59	10.09	9.61	9.15	8.73	8.31	7.94	7.61	7.26	6.96	6.67	6.41
						6.27	5.83	5.35	4.93	4.53	4.18	3.86	3.59	3.32	3.09	2.88	2.69	2.51	2.34	2.20	2.07
120DLH21	1.34	3048	22.30	22.30	822.29	16.37	15.65	14.77	14.00	13.25	12.60	11.98	11.41	10.87	10.36	9.89	9.45	9.05	8.66	8.31	7.96
						7.73	7.20	6.59	6.07	5.58	5.15	4.75	4.42	4.10	3.82	3.56	3.31	3.09	2.90	2.71	2.55
120DLH22	1.52	3048	25.56	25.56	942.66	18.71	18.03	17.06	16.14	15.31	14.55	13.85	13.17	12.55	11.98	11.42	10.93	10.45	10.01	9.58	9.18
						8.98	8.37	7.67	7.04	6.49	5.99	5.54	5.13	4.77	4.43	4.13	3.86	3.60	3.37	3.16	2.97
120DLH23	1.62	3048	28.28	28.28	1043.00	20.64	19.86	18.78	17.79	16.89	16.04	15.27	14.52	13.83	13.17	12.58	11.99	11.47	10.96	10.50	10.06
						9.39	8.77	8.04	7.38	6.80	6.27	5.79	5.38	4.97	4.64	4.31	4.02	3.76	3.51	3.31	3.10
120DLH24	1.93	3048	33.53	33.53	1237.00	24.45	23.50	22.21	21.03	19.95	18.97	18.05	17.18	16.37	15.62	14.92	14.26	13.63	13.04	12.51	11.98
						11.39	10.62	9.73	8.94	8.24	7.60	7.03	6.52	6.04	5.63	5.23	4.88	4.56	4.27	4.01	3.76
120DLH25	2.22	3048	38.43	38.43	1417.00	28.10	26.96	25.51	24.16	22.93	21.78	20.70	19.70	18.78	17.92	17.11	16.37	15.66	14.97	14.35	13.76
						13.35	12.44	11.41	10.47	9.64	8.90	8.23	7.63	7.07	6.59	6.14	5.73	5.35	5.02	4.69	4.40

American National Standard SJI 100 - 2020

STANDARD ASD LOAD TABLE

DEEP LONGSPAN STEEL JOISTS, DLH-SERIES

Based on a 50 ksi (345 MPa) Maximum Yield Strength
Spans up to and including 144 ft. adopted by the Steel Joist Institute May 25, 1983
Spans greater than 144 ft. up to and including 240 ft. adopted by the Steel Joist Institute May 18, 2010
Revised to May 18, 2010 – Effective December 31, 2010

The **BLACK** figures in the Load Table give the TOTAL safe uniformly distributed load-carrying capacities, in pounds per linear foot (kiloNewtons per meter), of **ASD** DLH-Series Steel Joists.

The approximate joist weights, in pounds per linear foot (kiloNewtons per meter), given in the Load Table may be added to the other building weights to determine the DEAD load. In all cases the DEAD load, including the joist self-weight, must be deducted from the TOTAL load to determine the LIVE load. The approximate joist weights do not include accessories.

The **RED** figures in the Load Table represent the uniform load, in pounds per linear foot (kiloNewtons per meter), which will produce an approximate joist deflection of 1/360 of the span. This load can be linearly prorated to obtain the uniform load for supplementary deflection criteria (i.e. a uniform load which will produce a joist deflection of 1/240 of the span may be obtained by multiplying the **RED** figures by 360/240). In no case shall the prorated load exceed the TOTAL load-carrying capacity of the joist.

The Load Table applies to joists with either parallel chords or pitched top chords. Joists can have a top chord pitch up to 1/2 inch per foot (42 mm per meter). If the pitch exceeds this limit, the Load Table does not apply. When top chords are pitched, the load-carrying capacities are determined by the nominal depth of the joists at the center of the span. Sloped parallel-chord joists shall use span as defined by the length along the slope.

Where the joist span is in the **BLUE SHADED** area of the Load Table, all rows of bridging shall be diagonal bridging with bolted connections at chords and intersections. Hoisting cables shall not be released until the two rows of bridging nearest the third points are completely installed. The **BLUE SHADED** area starts after 60'–0" (18288 mm) and extends up through 100'–0" (30175 mm).

Where the joist span is in the **GRAY SHADED** area of the Load Table, all rows of bridging shall be diagonal bridging with bolted connections at chords and intersections. Hoisting cables shall not be released until all rows of bridging are completely installed. The **GRAY SHADED** area starts after 100'–0" (30175 mm) and extends up through 240'–0" (73152 mm).

The approximate gross moment of inertia (not adjusted for shear deformation) of a standard joist listed in the Load Table may be determined as follows:

$I_j = 26.767(W)(L^3)(10^{-6})$ in^4 or $2.6953(W)(L^3)(10^{-5})$ mm^4, where W= **RED** figure in the Load Table, and
L = (span – 0.33) in feet or (span – 102) in millimeters

Loads for span increments not explicitly given in the Load Table may be determined using linear interpolation between the load values given in adjacent span columns.

*The safe uniform load for the spans shown in the SAFE LOAD Column is equal to (SAFE LOAD) / (span). The TOTAL safe uniformly distributed load-carrying capacity, for spans less than those shown in the SAFE LOAD Column are given in the MAX LOAD Column.

To solve for a RED figure for spans shown in the SAFE LOAD Column (or lesser spans), multiply the RED figure of the shortest span shown in the Load Table by (the shortest span shown in the Load Table – 0.33 feet [101 mm])^2 and divide by (the actual span – 0.33 feet [101 mm])^2. In no case shall the calculated load exceed the TOTAL load-carrying capacity of the joist.

ASD

STANDARD LOAD TABLE LONGSPAN STEEL JOISTS, DLH-SERIES

Based on a 50 ksi Maximum Yield Strength - Loads Shown in Pounds per Linear Foot (plf)

Joist Designation	Approx. Wt in Lbs. Per Linear Ft (Joists only)	Depth in inches	Max Load plf	SAFE LOAD* in Lbs. Between		SPAN IN FEET														
			< 62	62-89		90	91	92	93	94	95	96	97	98	99	100	101	102	103	104
52DLH10	25	52	432	26800		298	291	285	279	273	267	261	256	251	246	241	236	231	227	223
						171	165	159	154	150	145	140	136	132	128	124	120	116	114	110
52DLH11	26	52	475	29420		327	320	313	306	299	293	287	281	275	270	264	259	254	249	244
						187	181	174	169	164	158	153	149	144	140	135	132	128	124	120
52DLH12	29	52	529	32820		365	357	349	342	334	327	320	314	307	301	295	289	284	278	273
						204	197	191	185	179	173	168	163	158	153	149	144	140	135	132
52DLH13	34	52	643	39840		443	433	424	414	406	397	389	381	373	366	358	351	344	338	331
						247	239	231	224	216	209	203	197	191	185	180	174	170	164	159
52DLH14	39	52	735	45580		507	497	486	476	466	457	447	438	430	421	413	405	397	390	382
						276	266	258	249	242	234	227	220	213	207	201	194	189	184	178
52DLH15	42	52	826	51200		569	557	545	533	522	511	500	490	480	470	461	451	443	434	426
						311	301	291	282	272	264	256	247	240	233	226	219	213	207	201
52DLH16	45	52	890	55200		614	601	588	575	563	551	540	528	518	507	497	487	478	468	459
						346	335	324	314	304	294	285	276	267	260	252	245	237	230	224
52DLH17	52	52	1025	63540		706	691	676	661	647	634	620	608	595	583	572	560	549	539	528
						395	381	369	357	346	335	324	315	304	296	286	279	270	263	255
			<67	67-97		98	99	100	101	102	103	104	105	106	107	108	109	110	111	112
56DLH11	26	56	421	28200		288	283	277	272	267	262	257	253	248	244	239	235	231	227	223
						169	163	158	153	149	145	140	136	133	129	125	122	118	115	113
56DLH12	30	56	484	32400		331	324	318	312	306	300	295	289	284	278	273	268	263	259	254
						184	178	173	168	163	158	153	150	145	141	137	133	130	126	123
56DLH13	34	56	586	39240		401	394	386	379	372	365	358	351	344	338	331	325	319	314	308
						223	216	209	204	197	191	186	181	175	171	166	161	157	152	149
56DLH14	39	56	662	44360		453	444	435	427	419	411	403	396	388	381	375	368	361	355	349
						249	242	234	228	221	214	209	202	196	190	186	181	175	171	167
56DLH15	42	56	756	50680		518	508	498	488	478	469	460	451	443	434	426	419	411	403	396
						281	272	264	256	248	242	234	228	221	215	209	204	198	192	188
56DLH16	46	56	816	54680		559	548	537	526	516	506	496	487	478	469	460	452	444	436	428
						313	304	294	285	277	269	262	254	247	240	233	227	221	214	209
56DLH17	51	56	941	63020		643	630	618	605	594	582	571	560	549	539	529	520	510	501	492
						356	345	335	325	316	306	298	289	281	273	266	258	251	245	238
			< 71	71-99	100-105	106	107	108	109	110	111	112	113	114	115	116	117	118	119	120
60DLH12	29	60	439	31200	31200	295	289	284	279	274	270	265	261	256	252	248	244	240	236	232
						168	163	158	154	150	146	142	138	134	131	128	124	121	118	115
60DLH13	35	60	534	37920	37920	358	351	345	339	333	327	322	316	311	306	301	296	291	286	282
						203	197	191	187	181	176	171	167	163	158	154	151	147	143	139
60DLH14	40	60	594	42140	42140	398	391	383	376	370	363	356	350	344	338	332	327	321	316	310
						216	210	205	199	193	189	183	178	173	170	165	161	156	152	149
60DLH15	43	60	697	49460	49460	467	458	450	442	434	427	419	412	405	398	392	385	379	373	367
						255	248	242	235	228	223	216	210	205	200	194	190	185	180	175
60DLH16	46	60	766	54380	54380	513	504	494	485	476	468	460	451	444	436	428	421	414	407	400
						285	277	269	262	255	247	241	235	228	223	217	211	206	201	196
60DLH17	52	60	880	62500	62500	590	579	569	558	548	538	529	519	510	501	493	484	476	468	460
						324	315	306	298	290	283	275	267	261	254	247	241	235	228	223
60DLH18	59	60	1016	72120	72120	681	668	656	644	632	621	610	599	589	578	568	559	549	540	531
						366	357	346	337	327	319	310	303	294	286	279	272	266	259	252
			<76	76-99	100-113	114	115	116	117	118	119	120	121	122	123	124	125	126	127	128
64DLH12	31	64	396	30080	30080	264	259	255	251	247	243	239	235	231	228	224	221	218	214	211
						153	150	146	142	138	135	132	129	125	122	119	116	114	111	109
64DLH13	34	64	480	36500	36500	321	315	310	305	300	295	291	286	281	277	273	269	264	260	257
						186	181	176	171	168	163	159	155	152	148	144	141	137	134	131
64DLH14	40	64	550	41820	41820	367	360	354	349	343	337	332	326	321	316	311	306	301	296	292
						199	193	189	184	179	174	171	166	162	158	154	151	147	143	140
64DLH15	43	64	631	47940	47940	421	414	407	400	394	387	381	375	369	363	358	352	347	341	336
						234	228	223	217	211	206	201	196	191	187	182	177	173	170	165
64DLH16	46	64	710	53960	53960	474	466	458	450	443	435	428	421	414	407	401	394	388	382	376
						262	254	248	242	235	229	224	218	213	208	203	198	193	189	184
64DLH17	52	64	818	62180	62180	546	536	527	518	509	501	492	484	476	468	461	454	446	439	432
						298	290	283	275	268	262	255	248	243	237	231	226	220	215	210
64DLH18	59	64	945	71800	71800	630	619	608	598	587	578	568	559	549	540	532	523	515	507	499
						337	328	320	311	304	296	288	282	274	267	261	255	249	243	237
			< 81	81-99	100-121	122	123	124	125	126	127	128	129	130	131	132	133	134	135	136
68DLH13	37	68	433	35100	35100	288	284	279	275	271	267	263	259	255	252	248	244	241	237	234
						171	168	164	159	155	152	149	145	142	138	135	133	130	127	124
68DLH14	40	68	499	40420	40420	332	327	322	317	312	308	303	299	294	290	286	281	277	273	269
						184	179	175	171	167	163	159	155	152	148	145	141	138	135	133
68DLH15	44	68	560	45320	45320	372	365	360	354	348	343	337	332	327	322	317	312	308	303	299
						206	201	196	191	187	182	178	174	170	166	162	158	155	152	148
68DLH16	49	68	663	53740	53740	441	433	427	420	413	407	400	394	388	382	376	371	365	360	354
						242	236	230	225	219	214	209	204	199	195	190	186	182	178	174
68DLH17	55	68	748	60560	60560	497	489	481	474	467	460	453	446	439	433	427	420	414	408	403
						275	268	262	256	249	244	238	232	228	222	217	212	208	203	198
68DLH18	61	68	865	70100	70100	575	566	557	549	540	532	524	516	508	501	493	486	479	472	465
						311	304	297	289	283	276	269	263	257	251	246	240	234	230	225
68DLH19	67	68	997	80720	80720	662	651	641	631	621	611	601	592	583	574	565	557	548	540	532
						353	344	336	328	320	313	305	298	291	285	278	272	266	260	254
			< 85	85-99	100-129	130	131	132	133	134	135	136	137	138	139	140	141	142	143	144
72DLH14	41	72	462	39300	39300	303	298	294	290	285	281	277	274	270	266	262	259	255	252	248
						171	167	163	159	155	152	149	146	143	139	136	133	131	128	125
72DLH15	44	72	530	45020	45020	347	342	336	331	326	322	317	312	308	303	299	295	291	286	282
						191	187	183	178	174	171	167	163	160	156	152	150	147	143	140
72DLH16	50	72	612	52040	52040	401	395	390	384	378	373	368	363	358	353	348	343	338	334	329
						225	219	214	209	205	200	196	191	188	183	179	175	171	169	165
72DLH17	56	72	689	58540	58540	451	445	438	432	426	420	414	408	402	397	391	386	381	376	371
						256	250	245	239	233	228	224	218	213	209	205	200	196	191	188
72DLH18	59	72	807	68580	68580	528	520	512	505	497	490	483	479	470	463	457	450	444	438	432
						289	283	276	270	265	258	252	247	242	236	231	227	222	217	212
72DLH19	70	72	946	80400	80400	619	609	600	591	582	573	565	557	549	541	533	526	518	511	504
						328	321	313	306	300	293	286	280	274	268	263	257	251	247	241

ASD

STANDARD LOAD TABLE LONGSPAN STEEL JOISTS, DLH-SERIES

Based on a 50 ksi Maximum Yield Strength - Loads Shown in Pounds per Linear Foot (plf)

Joist Designation	Approx. Wt in Lbs. Per Linear Ft (Joists only)	Depth in inches	Max Load plf	SAFE LOAD* in Lbs. Between		SPAN IN FEET															
			< 81	81-99	100-111	112	115	118	121	124	127	130	133	136	139	142	145	148	151	155	160
80DLH15	40	80	644	52160	52160	466 321	442 296	421 275	401 255	383 236	366 220	350 205	335 192	321 179	307 167	295 157	283 147	272 139	261 130	247 120	231 109
80DLH16	46	80	774	62680	62680	560 375	535 347	509 321	485 297	461 276	439 257	419 240	400 224	383 209	366 196	350 184	336 172	322 162	309 152	293 141	275 128
80DLH17	53	80	894	72420	72420	647 451	617 416	587 386	559 358	533 332	510 309	487 288	466 269	446 252	427 235	410 221	393 207	378 195	363 183	345 169	323 154
80DLH18	60	80	1010	81840	81840	731 516	696 477	662 441	631 409	602 380	575 354	550 330	526 308	504 288	482 270	463 253	444 237	427 223	410 210	389 194	366 176
80DLH19	67	80	1179	95480	95480	853 578	812 533	773 493	736 458	701 425	670 396	640 369	612 344	585 322	560 301	537 283	516 266	495 250	476 235	451 217	423 197
80DLH20	75	80	1325	107320	107320	964 646	921 596	882 552	845 512	807 475	771 443	736 412	704 385	674 360	645 337	618 316	594 297	570 279	547 263	520 243	487 220
			< 89	89-99	100-120	121	124	127	130	133	136	139	142	145	148	151	155	160	165	170	175
88DLH16	46	88	699	62180	62180	514 361	490 336	467 313	447 291	428 272	410 254	394 238	378 223	363 210	349 197	335 186	318 172	299 156	281 143	265 130	251 119
88DLH17	51	88	790	70300	70300	581 404	553 375	526 349	502 325	479 304	458 284	439 266	420 249	403 234	386 220	371 207	352 191	330 173	310 159	292 146	274 133
88DLH18	58	88	906	80620	80620	667 460	635 427	605 397	577 370	551 346	527 323	504 303	483 284	463 267	444 250	426 236	404 218	379 199	356 181	335 165	316 152
88DLH19	65	88	1048	93260	93260	771 521	734 484	699 450	666 420	636 392	608 367	582 343	557 322	534 302	513 284	492 267	467 248	438 225	411 205	387 187	364 172
88DLH20	76	88	1206	107300	107300	889 623	854 579	821 539	789 502	755 469	723 438	694 410	665 385	639 361	614 340	590 320	560 296	527 269	495 246	467 224	440 206
88DLH21	89	88	1487	132340	132340	1099 724	1045 673	996 626	950 584	907 545	867 509	829 477	794 447	762 420	731 395	702 372	666 344	624 313	586 285	551 261	519 239
			< 97	97-99	100-129	130	133	136	139	142	145	148	151	155	160	165	170	175	180	185	190
96DLH17	52	96	724	70180	70180	540 389	517 363	496 339	474 318	456 298	438 280	421 263	405 247	385 229	362 208	339 190	320 173	302 159	284 146	269 134	255 124
96DLH18	58	96	814	79000	79000	608 443	583 413	559 386	535 362	513 340	493 319	475 300	457 282	435 261	410 237	386 216	364 198	344 181	326 166	308 153	292 141
96DLH19	66	96	974	94440	94440	727 502	697 469	667 438	638 410	611 385	585 361	561 340	539 320	512 296	480 269	451 246	424 224	401 206	378 189	357 174	338 161
96DLH20	74	96	1096	106280	106280	824 569	789 531	754 496	722 465	691 436	662 409	635 385	610 362	579 336	543 305	510 277	481 254	453 233	428 214	405 196	382 181
96DLH21	90	96	1375	133340	133340	1027 698	982 652	940 610	900 571	864 535	829 503	797 473	766 445	728 412	684 374	643 341	605 312	571 286	539 263	510 242	482 224
96DLH22	102	96	1540	149380	149380	1150 811	1108 757	1067 708	1028 663	991 622	957 584	921 549	886 517	843 479	792 435	745 396	702 362	664 332	627 305	594 281	562 259
			< 100	100-104	105-138	139	142	145	148	151	155	160	165	170	175	180	185	190	195	200	205
104DLH18	59	104	733	733	76980	554 426	532 400	512 375	489 353	472 332	450 307	423 279	400 255	378 233	358 213	339 195	321 180	305 167	290 154	276 142	263 132
104DLH19	67	104	892	892	93620	674 484	647 453	622 426	598 401	574 377	546 349	513 317	485 289	457 265	432 242	409 222	387 204	368 189	350 175	332 162	315 150
104DLH20	75	104	1002	1002	105260	764 548	738 513	714 483	688 453	661 427	629 395	591 359	555 327	522 299	493 274	465 251	440 232	417 214	395 198	375 184	357 170
104DLH21	90	104	1260	1260	132320	956 673	917 632	881 593	847 558	813 525	773 486	727 442	685 403	647 368	611 337	578 307	547 284	519 263	493 244	469 226	446 209
104DLH22	104	104	1413	1413	148360	1071 783	1034 734	999 689	966 648	934 610	893 564	841 513	792 468	747 428	706 392	668 359	633 331	600 306	570 283	542 262	516 244
104DLH23	109	104	1556	1556	163400	1181 819	1141 768	1096 721	1052 678	1009 638	956 590	899 536	845 489	795 447	750 410	708 377	670 347	635 320	602 296	571 274	543 254
			< 100	100-112	113-147	148	151	155	160	165	170	175	180	185	190	195	200	205	210	215	220
112DLH19	67	112	815	815	92100	623 466	600 439	571 406	537 369	506 336	478 308	451 281	428 259	406 238	386 220	366 203	348 189	332 175	317 162	303 151	289 142
112DLH20	76	112	922	922	104240	710 528	688 497	657 459	618 418	582 381	549 348	520 319	493 293	468 270	445 249	422 231	402 213	383 198	365 184	348 171	333 160
112DLH21	91	112	1162	1162	131300	891 650	858 612	816 566	767 514	722 469	681 429	644 393	610 361	578 333	549 306	521 283	496 263	473 244	450 227	430 211	411 198
112DLH22	104	112	1304	1304	147340	999 755	967 711	928 657	880 598	833 545	787 498	744 457	705 419	668 386	635 356	602 329	574 306	546 283	521 264	497 246	474 229
112DLH23	110	112	1437	1437	162360	1102 790	1067 744	1023 688	970 625	913 571	859 522	810 478	765 439	724 404	686 373	651 345	618 320	588 297	560 276	533 257	509 239
112DLH24	131	112	1703	1703	192440	1304 957	1263 901	1212 834	1151 758	1087 691	1026 632	970 579	919 532	871 489	828 451	786 418	748 387	713 359	680 334	648 311	619 291
			< 100	100-120	121-165	166	170	175	180	185	190	195	200	205	210	215	220	225	230	235	240
120DLH20	77	120	819	819	99100	597 430	571 400	538 367	510 338	484 311	461 287	438 265	418 246	399 228	380 212	362 198	347 185	332 172	318 161	305 151	292 142
120DLH21	92	120	1019	1019	123240	748 530	714 494	675 452	639 416	606 383	576 353	548 326	521 303	497 281	474 262	452 244	432 227	414 212	396 199	379 186	363 175
120DLH22	104	120	1168	1168	141280	855 616	823 574	779 526	737 483	699 445	665 411	632 380	602 352	574 327	547 304	522 283	499 265	477 247	457 231	438 217	420 204
120DLH23	111	120	1292	1292	156320	943 644	907 601	858 551	813 506	771 466	733 430	697 397	664 369	632 341	602 318	574 296	548 276	524 258	501 241	479 227	459 213
120DLH24	132	120	1532	1532	185380	1117 781	1073 728	1015 667	961 613	912 565	867 521	824 482	785 447	748 414	713 386	681 359	651 335	623 313	596 293	571 275	548 258
120DLH25	152	120	1756	1756	212420	1284 915	1231 853	1165 782	1104 718	1047 661	994 610	946 564	900 523	858 485	819 452	782 421	748 393	715 367	684 344	656 322	628 302

ASD

METRIC LOAD TABLE LONGSPAN STEEL JOISTS, DLH-SERIES

Based on 345 MPa Maximum Yield Strength - Loads Shown in Kilonewtons per Meter (kN/m)

Joist Designation	Approx. Wt in kN Per Meter (Joists only)	Depth in mm	Max Load kN/m	SAFE LOAD* in kN Between		SPAN IN MILLIMETERS														
			<18898	18898-27127		27432	27737	28042	28346	28651	28956	29261	29566	29870	30175	30480	30785	31090	31394	31699
52DLH10	0.36	1321	6.30	119.2		4.34	4.24	4.15	4.07	3.98	3.89	3.80	3.73	3.66	3.59	3.51	3.44	3.37	3.31	3.25
						2.49	2.4	2.32	2.24	2.18	2.11	2.04	1.98	1.92	1.86	1.80	1.75	1.69	1.66	1.60
52DLH11	0.38	1321	6.93	130.8		4.77	4.67	4.56	4.46	4.36	4.27	4.18	4.10	4.01	3.94	3.85	3.77	3.70	3.63	3.56
						2.72	2.64	2.53	2.46	2.39	2.30	2.23	2.17	2.10	2.04	1.97	1.92	1.86	1.80	1.75
52DLH12	0.42	1321	7.72	145.9		5.32	5.21	5.09	4.99	4.87	4.77	4.67	4.58	4.48	4.39	4.30	4.21	4.14	4.05	3.98
						2.97	2.87	2.78	2.69	2.61	2.52	2.45	2.37	2.30	2.23	2.17	2.10	2.04	1.97	1.92
52DLH13	0.50	1321	9.38	177.2		6.46	6.31	6.18	6.04	5.92	5.79	5.67	5.56	5.44	5.34	5.22	5.12	5.02	4.93	4.83
						3.60	3.48	3.37	3.26	3.15	3.05	2.96	2.87	2.78	2.69	2.62	2.53	2.48	2.39	2.32
52DLH14	0.57	1321	10.73	202.7		7.39	7.25	7.09	6.94	6.80	6.66	6.52	6.39	6.27	6.14	6.02	5.91	5.79	5.69	5.57
						4.02	3.88	3.76	3.63	3.53	3.41	3.31	3.21	3.10	3.02	2.93	2.83	2.75	2.68	2.59
52DLH15	0.61	1321	12.05	227.7		8.30	8.12	7.95	7.77	7.61	7.45	7.29	7.15	7.00	6.85	6.72	6.58	6.46	6.33	6.21
						4.53	4.39	4.24	4.11	3.96	3.85	3.73	3.60	3.50	3.40	3.29	3.19	3.10	3.02	2.93
52DLH16	0.66	1321	12.99	245.5		8.96	8.77	8.58	8.39	8.21	8.04	7.88	7.70	7.55	7.39	7.25	7.10	6.97	6.82	6.69
						5.04	4.88	4.72	4.58	4.43	4.29	4.15	4.02	3.89	3.79	3.67	3.57	3.45	3.35	3.26
52DLH17	0.76	1321	14.96	282.6		10.30	10.08	9.86	9.64	9.44	9.25	9.04	8.87	8.68	8.50	8.34	8.17	8.01	7.86	7.70
						5.76	5.56	5.38	5.21	5.04	4.88	4.72	4.59	4.43	4.31	4.17	4.07	3.94	3.83	3.72
			<20422	20422-29566		29870	30175	30480	30785	31090	31394	31699	32004	32309	32614	32918	33223	33528	33833	34138
56DLH11	0.38	1422	6.14	125.4		4.20	4.13	4.04	3.96	3.89	3.82	3.75	3.69	3.61	3.56	3.48	3.42	3.37	3.31	3.25
						2.46	2.37	2.30	2.23	2.17	2.11	2.04	1.98	1.94	1.88	1.82	1.78	1.72	1.67	1.64
56DLH12	0.44	1422	7.06	144.1		4.83	4.72	4.64	4.55	4.46	4.37	4.30	4.21	4.14	4.05	3.98	3.91	3.83	3.77	3.70
						2.68	2.59	2.52	2.45	2.37	2.30	2.23	2.18	2.11	2.05	1.99	1.94	1.89	1.83	1.79
56DLH13	0.50	1422	8.55	174.5		5.85	5.74	5.63	5.53	5.42	5.32	5.22	5.12	5.02	4.93	4.83	4.74	4.65	4.58	4.49
						3.25	3.15	3.05	2.97	2.87	2.78	2.71	2.64	2.55	2.49	2.42	2.34	2.29	2.21	2.17
56DLH14	0.57	1422	9.66	197.3		6.61	6.47	6.34	6.23	6.11	5.99	5.88	5.77	5.66	5.56	5.47	5.37	5.26	5.18	5.09
						3.63	3.53	3.41	3.32	3.22	3.12	3.05	2.94	2.86	2.77	2.71	2.64	2.55	2.49	2.43
56DLH15	0.61	1422	11.03	225.4		7.55	7.41	7.26	7.12	6.97	6.84	6.71	6.58	6.46	6.33	6.21	6.11	5.99	5.88	5.77
						4.10	3.96	3.85	3.73	3.61	3.53	3.41	3.32	3.22	3.13	3.05	2.97	2.88	2.80	2.74
56DLH16	0.67	1422	11.91	243.2		8.15	7.99	7.83	7.67	7.53	7.38	7.23	7.10	6.97	6.84	6.71	6.59	6.47	6.36	6.24
						4.56	4.43	4.29	4.15	4.04	3.92	3.82	3.70	3.60	3.50	3.40	3.31	3.22	3.12	3.05
56DLH17	0.74	1422	13.73	280.3		9.38	9.19	9.01	8.82	8.66	8.49	8.33	8.17	8.01	7.86	7.72	7.58	7.44	7.31	7.18
						5.19	5.03	4.88	4.74	4.61	4.46	4.34	4.21	4.10	3.98	3.88	3.76	3.66	3.57	3.47
			<21641	21641-30175	30480-32004	32309	32614	32918	33223	33528	33833	34138	34442	34747	35052	35357	35662	35966	36271	36576
60DLH12	0.42	1524	6.41	138.7	138.7	4.30	4.21	4.14	4.07	3.99	3.94	3.86	3.80	3.73	3.67	3.61	3.56	3.50	3.44	3.38
						2.45	2.37	2.30	2.24	2.18	2.13	2.07	2.01	1.95	1.91	1.86	1.80	1.76	1.72	1.67
60DLH13	0.51	1524	7.79	168.6	168.6	5.22	5.12	5.03	4.94	4.85	4.77	4.69	4.61	4.53	4.46	4.39	4.31	4.24	4.17	4.11
						2.96	2.87	2.78	2.72	2.64	2.56	2.49	2.43	2.37	2.30	2.24	2.20	2.14	2.08	2.02
60DLH14	0.58	1524	8.67	187.4	187.4	5.80	5.70	5.58	5.48	5.39	5.29	5.19	5.10	5.02	4.93	4.84	4.77	4.68	4.61	4.52
						3.15	3.06	2.99	2.90	2.81	2.75	2.67	2.59	2.52	2.48	2.40	2.34	2.27	2.21	2.17
60DLH15	0.63	1524	10.17	220.0	220.0	6.81	6.68	6.56	6.45	6.33	6.23	6.11	6.01	5.91	5.80	5.72	5.61	5.53	5.44	5.35
						3.72	3.61	3.53	3.42	3.32	3.25	3.15	3.06	2.99	2.91	2.83	2.77	2.69	2.62	2.55
60DLH16	0.67	1524	11.18	241.8	241.8	7.48	7.35	7.20	7.07	6.94	6.82	6.71	6.58	6.47	6.36	6.24	6.14	6.04	5.93	5.83
						4.15	4.04	3.92	3.82	3.72	3.60	3.51	3.42	3.32	3.25	3.16	3.07	3.00	2.93	2.86
60DLH17	0.76	1524	12.84	278.0	278.0	8.61	8.44	8.30	8.14	7.99	7.85	7.72	7.57	7.44	7.31	7.19	7.06	6.94	6.82	6.71
						4.72	4.59	4.46	4.34	4.23	4.13	4.01	3.89	3.80	3.70	3.60	3.51	3.42	3.32	3.25
60DLH18	0.86	1524	14.83	320.8	320.8	9.93	9.74	9.57	9.39	9.22	9.06	8.90	8.74	8.59	8.43	8.28	8.15	8.01	7.88	7.74
						5.34	5.21	5.04	4.91	4.77	4.65	4.52	4.42	4.29	4.17	4.07	3.96	3.88	3.77	3.67
			<23165	23165-30175	30480-34442	34747	35052	35357	35662	35966	36271	36576	36881	37186	37490	37795	38100	38405	38710	39014
64DLH12	0.45	1626	5.78	133.8	133.8	3.85	3.77	3.72	3.66	3.60	3.54	3.48	3.42	3.37	3.32	3.26	3.22	3.18	3.12	3.07
						2.23	2.18	2.13	2.07	2.01	1.97	1.92	1.88	1.82	1.78	1.73	1.69	1.66	1.61	1.59
64DLH13	0.50	1626	7.01	162.3	162.3	4.68	4.59	4.52	4.45	4.37	4.30	4.24	4.17	4.10	4.04	3.98	3.92	3.85	3.79	3.75
						2.71	2.64	2.56	2.49	2.45	2.37	2.32	2.26	2.21	2.15	2.10	2.05	1.99	1.95	1.91
64DLH14	0.58	1626	8.03	186.0	186.0	5.35	5.25	5.16	5.09	5.00	4.91	4.84	4.75	4.68	4.61	4.53	4.46	4.39	4.31	4.26
						2.90	2.81	2.75	2.68	2.61	2.53	2.49	2.42	2.36	2.30	2.24	2.20	2.14	2.08	2.04
64DLH15	0.63	1626	9.21	213.2	213.2	6.14	6.04	5.93	5.83	5.74	5.64	5.56	5.47	5.38	5.29	5.22	5.13	5.06	4.97	4.90
						3.41	3.32	3.25	3.16	3.07	3.00	2.93	2.86	2.78	2.72	2.65	2.58	2.52	2.48	2.40
64DLH16	0.67	1626	10.36	240.0	240.0	6.91	6.80	6.68	6.56	6.46	6.34	6.24	6.14	6.04	5.93	5.85	5.74	5.66	5.57	5.48
						3.82	3.70	3.61	3.53	3.42	3.34	3.26	3.18	3.10	3.03	2.96	2.88	2.81	2.75	2.68
64DLH17	0.76	1626	11.94	276.5	276.5	7.96	7.82	7.69	7.55	7.42	7.31	7.18	7.06	6.94	6.82	6.72	6.62	6.50	6.40	6.30
						4.34	4.23	4.13	4.01	3.91	3.82	3.72	3.61	3.54	3.45	3.37	3.29	3.21	3.13	3.06
64DLH18	0.86	1626	13.79	319.3	319.3	9.19	9.03	8.87	8.72	8.56	8.43	8.28	8.15	8.01	7.88	7.76	7.63	7.51	7.39	7.28
						4.91	4.78	4.67	4.53	4.43	4.31	4.20	4.11	3.99	3.89	3.80	3.72	3.63	3.54	3.45
			<24689	24689-30175	30480-36881	37186	37490	37795	38100	38405	38710	39014	39319	39624	39929	40234	40538	40843	41148	41453
68DLH13	0.54	1727	6.32	156.1	156.1	4.20	4.14	4.07	4.01	3.95	3.89	3.83	3.77	3.72	3.67	3.61	3.56	3.51	3.45	3.41
						2.49	2.45	2.39	2.32	2.26	2.21	2.17	2.11	2.07	2.01	1.97	1.94	1.89	1.85	1.80
68DLH14	0.58	1727	7.28	179.7	179.7	4.84	4.77	4.69	4.62	4.55	4.49	4.42	4.36	4.29	4.23	4.17	4.10	4.04	3.98	3.92
						2.68	2.61	2.55	2.49	2.43	2.37	2.32	2.26	2.21	2.15	2.11	2.05	2.01	1.97	1.94
68DLH15	0.64	1727	8.17	201.5	201.5	5.42	5.32	5.25	5.16	5.07	5.00	4.91	4.84	4.77	4.69	4.62	4.55	4.49	4.42	4.36
						3.00	2.93	2.86	2.78	2.72	2.65	2.59	2.53	2.48	2.42	2.36	2.30	2.26	2.21	2.15
68DLH16	0.72	1727	9.68	239.0	239.0	6.43	6.31	6.23	6.12	6.02	5.93	5.83	5.74	5.66	5.57	5.48	5.41	5.32	5.25	5.16
						3.53	3.44	3.35	3.28	3.19	3.12	3.05	2.97	2.90	2.84	2.77	2.71	2.65	2.59	2.53
68DLH17	0.80	1727	10.92	269.3	269.3	7.25	7.13	7.01	6.91	6.81	6.71	6.61	6.50	6.40	6.31	6.23	6.12	6.04	5.95	5.88
						4.01	3.91	3.82	3.73	3.63	3.56	3.47	3.38	3.32	3.23	3.16	3.09	3.03	2.96	2.88
68DLH18	0.89	1727	12.62	311.8	311.8	8.39	8.26	8.12	8.01	7.88	7.76	7.64	7.53	7.41	7.31	7.19	7.09	6.99	6.88	6.78
						4.53	4.43	4.33	4.21	4.13	4.02	3.92	3.83	3.75	3.66	3.59	3.50	3.41	3.35	3.28
68DLH19	0.98	1727	14.55	359.0	359.0	9.66	9.50	9.35	9.20	9.06	8.91	8.77	8.63	8.50	8.37	8.24	8.12	7.99	7.88	7.76
						5.15	5.02	4.90	4.78	4.67	4.56	4.45	4.34	4.24	4.15	4.05	3.96	3.88	3.79	3.70
			<25908	25908-30175	30480-39319	39624	39929	40234	40538	40843	41148	41453	41758	42062	42367	42672	42977	43282	43586	43891
72DLH14	0.60	1829	6.74	174.8	174.8	4.42	4.34	4.29	4.23	4.15	4.10	4.04	3.99	3.94	3.88	3.82	3.77	3.72	3.67	3.61
						2.49	2.43	2.37	2.32	2.26	2.21	2.17	2.13	2.08	2.02	1.98	1.94	1.91	1.86	1.82
72DLH15	0.64	1829	7.73	200.2	200.2	5.06	4.99	4.90	4.83	4.75	4.69	4.62	4.55	4.49	4.42	4.36	4.30	4.24	4.17	4.11
						2.78	2.72	2.67	2.59	2.53	2.49	2.43	2.37	2.33	2.27	2.21	2.18	2.14	2.08	2.04
72DLH16	0.73	1829	8.93	231.4	231.4	5.85	5.76	5.69	5.60	5.51	5.44	5.37	5.29	5.22	5.15	5.07	5.00	4.93	4.87	4.80
						3.28	3.19	3.12	3.05	2.99	2.91	2.86	2.78	2.74	2.67	2.61	2.55	2.49	2.46	2.40
72DLH17	0.82	1829	10.06	260.3	260.3	6.58	6.49	6.39	6.30	6.21	6.12	6.04	5.95	5.86	5.79	5.70	5.63	5.56	5.48	5.41
						3.73	3.64	3.57	3.48	3.40	3.32	3.26	3.18	3.10	3.05	2.99	2.91	2.86	2.78	2.74
72DLH18	0.86	1829	11.78	305.0	305.0	7.70	7.58	7.47	7.36	7.25	7.15	7.04	6.99	6.85	6.75	6.66	6.56	6.47	6.39	6.30
						4.21	4.13	4.02	3.94	3.86	3.76	3.67	3.60	3.53	3.44	3.37	3.31	3.23	3.16	3.09
72DLH19	1.02	1829	13.81	357.6	357.6	9.03	8.88	8.75	8.62	8.49	8.36	8.24	8.12	8.01	7.89	7.77	7.67	7.55	7.45	7.35
						4.78	4.68	4.56	4.46	4.37	4.27	4.17	4.08	3.99	3.91	3.83	3.75	3.66	3.60	3.51

ASD

METRIC LOAD TABLE LONGSPAN STEEL JOISTS, DLH-SERIES

Based on 345 MPa Maximum Yield Strength - Loads Shown in Kilonewtons per Meter (kN/m)

Joist Designation	Approx. Wt in kN Per Meter (Joists only)	Depth in mm	Max Load kN/m	SAFE LOAD* in kN Between		SPAN IN MILLIMETERS															
			<24689	24689-30175	30480-33833	34138	35052	35966	36881	37795	38710	39624	40538	41453	42367	43282	44196	45110	46025	47244	48768
80DLH15	0.58	2032	9.40	232.0	232.0	6.80	6.45	6.14	5.85	5.58	5.34	5.10	4.88	4.68	4.48	4.30	4.13	3.96	3.80	3.60	3.37
						4.68	4.31	4.01	3.72	3.44	3.21	2.99	2.80	2.61	2.43	2.29	2.14	2.02	1.89	1.75	1.59
80DLH16	0.67	2032	11.3	278.8	278.8	8.17	7.80	7.42	7.07	6.72	6.40	6.11	5.83	5.58	5.34	5.10	4.90	4.69	4.50	4.27	4.01
						5.47	5.06	4.68	4.33	4.02	3.75	3.50	3.26	3.05	2.86	2.68	2.51	2.36	2.21	2.05	1.86
80DLH17	0.77	2032	13.05	322.1	322.1	9.44	9.00	8.56	8.15	7.77	7.44	7.10	6.80	6.50	6.23	5.98	5.73	5.51	5.29	5.03	4.71
						6.58	6.07	5.63	5.22	4.84	4.50	4.20	3.92	3.67	3.42	3.22	3.02	2.84	2.67	2.46	2.24
80DLH18	0.88	2032	14.74	364.0	364.0	10.66	10.15	9.66	9.20	8.78	8.39	8.02	7.67	7.35	7.03	6.75	6.47	6.23	5.98	5.67	5.34
						7.53	6.96	6.43	5.96	5.54	5.16	4.81	4.49	4.20	3.94	3.69	3.45	3.25	3.06	2.83	2.56
80DLH19	0.98	2032	17.21	424.7	424.7	12.44	11.85	11.28	10.74	10.23	9.77	9.34	8.93	8.53	8.17	7.83	7.53	7.22	6.94	6.58	6.17
						8.43	7.77	7.19	6.68	6.20	5.77	5.38	5.02	4.69	4.39	4.13	3.88	3.64	3.42	3.16	2.87
80DLH20	1.09	2032	19.34	477.3	477.3	14.06	13.44	12.87	12.33	11.77	11.25	10.74	10.27	9.83	9.41	9.01	8.66	8.31	7.98	7.58	7.10
						9.42	8.69	8.05	7.47	6.93	6.46	6.01	5.61	5.25	4.91	4.61	4.33	4.07	3.83	3.54	3.21
			<27127	27127-30175	30480-36576	36881	37795	38710	39624	40538	41453	42367	43282	44196	45110	46025	47244	48768	50292	51816	53340
88DLH16	0.67	2235	10.20	276.5	276.5	7.50	7.15	6.81	6.52	6.24	5.98	5.74	5.51	5.29	5.09	4.88	4.64	4.36	4.10	3.86	3.66
						5.26	4.90	4.56	4.24	3.96	3.70	3.47	3.25	3.06	2.87	2.71	2.51	2.27	2.08	1.89	1.73
88DLH17	0.74	2235	11.53	312.7	312.7	8.47	8.07	7.67	7.32	6.99	6.68	6.40	6.12	5.88	5.63	5.41	5.13	4.81	4.52	4.26	3.99
						5.89	5.47	5.09	4.74	4.43	4.14	3.88	3.63	3.41	3.21	3.02	2.78	2.52	2.32	2.13	1.94
88DLH18	0.85	2235	13.22	358.6	358.6	9.73	9.26	8.82	8.42	8.04	7.69	7.35	7.04	6.75	6.47	6.21	5.89	5.53	5.19	4.88	4.61
						6.71	6.23	5.79	5.39	5.04	4.71	4.42	4.14	3.89	3.64	3.44	3.18	2.90	2.64	2.40	2.21
88DLH19	0.95	2235	15.29	414.8	414.8	11.25	10.71	10.20	9.71	9.28	8.87	8.49	8.12	7.79	7.48	7.18	6.81	6.39	5.99	5.64	5.31
						7.60	7.06	6.56	6.12	5.72	5.35	5.00	4.69	4.40	4.14	3.89	3.61	3.28	2.99	2.72	2.51
88DLH20	1.11	2235	17.60	477.2	477.2	12.97	12.46	11.98	11.51	11.01	10.55	10.12	9.70	9.32	8.96	8.61	8.17	7.69	7.22	6.81	6.42
						9.09	8.44	7.86	7.32	6.84	6.39	5.98	5.61	5.26	4.96	4.67	4.31	3.92	3.59	3.26	3.00
88DLH21	1.30	2235	21.70	588.3	588.3	16.03	15.25	14.53	13.86	13.23	12.65	12.09	11.58	11.12	10.66	10.24	9.71	9.10	8.55	8.04	7.57
						10.56	9.82	9.13	8.52	7.95	7.42	6.96	6.52	6.12	5.76	5.42	5.02	4.56	4.15	3.80	3.48
			<29566	29566-30175	30480-39319	39624	40538	41453	42367	43282	44196	45110	46025	47244	48768	50292	51816	53340	54864	56388	57912
96DLH17	0.76	2438	10.57	312.1	312.1	7.88	7.54	7.23	6.91	6.65	6.39	6.14	5.91	5.61	5.28	4.94	4.67	4.40	4.14	3.92	3.72
						5.67	5.29	4.94	4.64	4.34	4.08	3.83	3.60	3.34	3.03	2.77	2.52	2.32	2.13	1.95	1.80
96DLH18	0.85	2438	11.88	351.4	351.4	8.87	8.50	8.15	7.80	7.48	7.19	6.93	6.66	6.34	5.98	5.63	5.31	5.02	4.75	4.49	4.26
						6.46	6.02	5.63	5.28	4.96	4.65	4.37	4.11	3.80	3.45	3.15	2.88	2.64	2.42	2.23	2.05
96DLH19	0.96	2438	14.21	420.0	420.0	10.60	10.17	9.73	9.31	8.91	8.53	8.18	7.86	7.47	7.00	6.58	6.18	5.85	5.51	5.21	4.93
						7.32	6.84	6.39	5.98	5.61	5.26	4.96	4.67	4.31	3.92	3.59	3.26	3.00	2.75	2.53	2.34
96DLH20	1.08	2438	15.99	472.7	472.7	12.02	11.51	11.00	10.53	10.08	9.66	9.26	8.90	8.44	7.92	7.44	7.01	6.61	6.24	5.91	5.57
						8.30	7.74	7.23	6.78	6.36	5.96	5.61	5.28	4.90	4.45	4.04	3.70	3.40	3.12	2.86	2.64
96DLH21	1.31	2438	20.07	593.1	593.1	14.98	14.33	13.71	13.13	12.60	12.09	11.63	11.17	10.62	9.98	9.38	8.82	8.33	7.86	7.44	7.03
						10.18	9.51	8.90	8.33	7.80	7.34	6.90	6.49	6.01	5.45	4.97	4.55	4.17	3.83	3.53	3.26
96DLH22	1.49	2438	22.47	664.4	664.4	16.78	16.17	15.57	15.00	14.46	13.96	13.44	12.93	12.30	11.55	10.87	10.24	9.69	9.15	8.66	8.20
						11.83	11.04	10.33	9.67	9.07	8.52	8.01	7.54	6.99	6.34	5.77	5.28	4.84	4.45	4.10	3.77
			<30480	30480-31699	32004-42062	42367	43282	44196	45110	46025	47244	48768	50292	51816	53340	54864	56388	57912	59436	60960	62484
104DLH18	0.86	2642	10.70	10.70	342.4	8.08	7.76	7.47	7.13	6.88	6.56	6.17	5.83	5.51	5.22	4.94	4.68	4.45	4.23	4.02	3.83
						6.21	5.83	5.47	5.15	4.84	4.48	4.07	3.72	3.40	3.10	2.84	2.62	2.43	2.24	2.07	1.92
104DLH19	0.98	2642	13.02	13.02	416.4	9.83	9.44	9.07	8.72	8.37	7.96	7.48	7.07	6.66	6.30	5.96	5.64	5.37	5.10	4.84	4.59
						7.06	6.61	6.21	5.85	5.50	5.09	4.62	4.21	3.86	3.53	3.23	2.97	2.75	2.55	2.36	2.18
104DLH20	1.09	2642	14.62	14.62	468.2	11.14	10.77	10.42	10.04	9.64	9.17	8.62	8.09	7.61	7.19	6.78	6.42	6.08	5.76	5.47	5.21
						7.99	7.48	7.04	6.61	6.23	5.76	5.23	4.77	4.36	3.99	3.66	3.38	3.12	2.88	2.68	2.48
104DLH21	1.31	2642	18.39	18.39	588.5	13.95	13.38	12.85	12.36	11.86	11.28	10.60	9.99	9.44	8.91	8.43	7.98	7.57	7.19	6.84	6.50
						9.82	9.22	8.65	8.14	7.66	7.09	6.45	5.88	5.37	4.91	4.48	4.14	3.83	3.56	3.29	3.05
104DLH22	1.52	2642	20.62	20.62	659.9	15.63	15.09	14.57	14.09	13.63	13.03	12.27	11.55	10.90	10.30	9.74	9.23	8.75	8.31	7.90	7.53
						11.42	10.71	10.05	9.45	8.90	8.23	7.48	6.82	6.24	5.72	5.23	4.83	4.46	4.13	3.82	3.56
104DLH23	1.59	2642	22.71	22.71	726.8	17.23	16.65	15.99	15.35	14.72	13.95	13.11	12.33	11.60	10.94	10.33	9.77	9.26	8.78	8.33	7.92
						11.95	11.20	10.52	9.89	9.31	8.61	7.82	7.13	6.52	5.98	5.50	5.06	4.67	4.31	3.99	3.70
			<30480	30480-34138	34442-44806	45110	46025	47244	48768	50292	51816	53340	54864	56388	57912	59436	60960	62484	64008	65532	67056
112DLH19	0.98	2845	11.89	11.89	409.6	9.09	8.75	8.33	7.83	7.38	6.97	6.58	6.24	5.92	5.63	5.34	5.07	4.84	4.62	4.42	4.21
						6.80	6.40	5.92	5.38	4.90	4.49	4.10	3.77	3.47	3.21	2.96	2.75	2.55	2.36	2.20	2.07
112DLH20	1.11	2845	13.46	13.46	463.6	10.36	10.04	9.58	9.01	8.49	8.01	7.58	7.19	6.82	6.49	6.15	5.86	5.58	5.32	5.07	4.85
						7.70	7.25	6.69	6.10	5.56	5.07	4.65	4.27	3.94	3.63	3.37	3.10	2.88	2.68	2.49	2.33
112DLH21	1.33	2845	16.96	16.96	584.0	13.00	12.52	11.90	11.19	10.53	9.93	9.39	8.90	8.43	8.01	7.60	7.23	6.90	6.56	6.27	5.99
						9.48	8.93	8.26	7.50	6.84	6.26	5.73	5.26	4.85	4.46	4.13	3.83	3.56	3.31	3.07	2.88
112DLH22	1.52	2845	19.03	19.03	655.4	14.57	14.11	13.54	12.84	12.15	11.48	10.85	10.28	9.74	9.26	8.78	8.37	7.96	7.60	7.25	6.91
						11.01	10.37	9.58	8.72	7.95	7.26	6.66	6.11	5.63	5.19	4.80	4.46	4.13	3.85	3.59	3.34
112DLH23	1.61	2845	20.97	20.97	722.2	16.08	15.57	14.92	14.15	13.32	12.53	11.82	11.16	10.56	10.01	9.50	9.01	8.58	8.17	7.77	7.42
						11.52	10.85	10.04	9.12	8.33	7.61	6.97	6.40	5.89	5.44	5.03	4.67	4.33	4.02	3.75	3.48
112DLH24	1.91	2845	24.85	24.85	856.0	19.03	18.43	17.68	16.79	15.86	14.97	14.15	13.41	12.71	12.08	11.47	10.91	10.40	9.92	9.45	9.03
						13.96	13.14	12.17	11.06	10.08	9.22	8.44	7.76	7.13	6.58	6.10	5.64	5.23	4.87	4.53	4.24
			<30480	30480-36576	36881-50292	50597	51816	53340	54864	56388	57912	59436	60960	62484	64008	65532	67056	68580	70104	71628	73152
120DLH20	1.12	3048	11.95	11.95	440.8	8.71	8.33	7.85	7.44	7.06	6.72	6.39	6.10	5.82	5.54	5.28	5.06	4.84	4.64	4.45	4.26
						6.27	5.83	5.35	4.93	4.53	4.18	3.86	3.59	3.32	3.09	2.88	2.69	2.51	2.34	2.20	2.07
120DLH21	1.34	3048	14.87	14.87	548.1	10.91	10.42	9.85	9.32	8.84	8.40	7.99	7.60	7.25	6.91	6.59	6.30	6.04	5.77	5.53	5.29
						7.73	7.20	6.59	6.07	5.58	5.15	4.75	4.42	4.10	3.82	3.56	3.31	3.09	2.90	2.71	2.55
120DLH22	1.52	3048	17.05	17.05	628.4	12.47	12.01	11.36	10.75	10.20	9.70	9.22	8.78	8.37	7.98	7.61	7.28	6.96	6.66	6.39	6.12
						8.98	8.37	7.67	7.04	6.49	5.99	5.54	5.13	4.77	4.43	4.13	3.86	3.60	3.37	3.16	2.97
120DLH23	1.62	3048	18.86	18.86	695.3	13.76	13.23	12.52	11.86	11.25	10.69	10.17	9.69	9.22	8.78	8.37	7.99	7.64	7.31	6.99	6.69
						9.39	8.77	8.04	7.38	6.80	6.27	5.79	5.38	4.97	4.64	4.31	4.02	3.76	3.51	3.31	3.10
120DLH24	1.93	3048	22.36	22.36	824.6	16.30	15.65	14.81	14.02	13.30	12.65	12.02	11.45	10.91	10.40	9.93	9.50	9.09	8.69	8.33	7.99
						11.39	10.62	9.73	8.94	8.24	7.60	7.03	6.52	6.04	5.63	5.23	4.88	4.56	4.27	4.01	3.76
120DLH25	2.22	3048	25.63	25.63	944.8	18.73	17.96	17.00	16.11	15.27	14.50	13.80	13.13	12.52	11.95	11.41	10.91	10.43	9.98	9.57	9.16
						13.35	12.44	11.41	10.47	9.64	8.90	8.23	7.63	7.07	6.59	6.14	5.73	5.35	5.02	4.69	4.40

STANDARD WEIGHT TABLES FOR JOIST GIRDERS

Based on 50 ksi Maximum Yield Strength
Adopted by the Steel Joist Institute May 17, 2016

The Joist Girders presented in the following tables are based on the Steel Joist Institute Standard Specifications for K-Series, LH- Series, and DLH- Series Open Web Steel Joists and for Joist Girders adopted November 4, 1985 – revised to November 10, 2014, Effective January 1, 2015 and all the requirements contained therein shall be followed.

The Joist Girders top chords are considered as being laterally supported by positive attachment of the supported steel joists to the Joist Girder top chord.

The top of the table presents the total kip load on each panel point (joist location). The tables can be utilized with either an ASD load in the green row, or a LRFD load (factored) in the blue row.

These weight tables are intended to be a tool to assist in the preliminary design and estimate for Joist Girders used in floors and roofs. All of the values are approximate and intended as a guide for the specifying professional. The joist manufacturer will design for the specific loads of the designation at the required span, and the values for self-weight may vary from the tabulated values – the tabulated values are not design minimums or maximums. It is presumed that the designated kip load includes an allowance for the Joist Girder self-weight, unless noted otherwise on the structural drawings.

There are countless combinations of span, number of panels, kip loads, and Joist Girder depth and the tables do not represent all available combinations. Interpolation can be used for approximate values when needed between columns and rows of the tables.

Consult with a joist manufacturer for information regarding web openings available for duct passage through Joist Girders.

Joist Girders that are anticipated to have chord angles of 6 x 6 or smaller which are un-shaded in the table shall have a standard 7 ½ inch bearing seat depth (height). The weight table includes high capacity Joist Girders that may utilize 8 x 8 chord angles. The Joist Girders that weigh 150 plf or more are shaded grey in the table and shall have a standard 10 inch minimum bearing seat depth. It is suggested that the joist manufacturer be consulted for lead times and availability of Joist Girders in the grey shaded portion of the table due to the possibility of 8 x 8 chord angles.

Example

Using the Joist Girder Weight Table

1) Joist Girder depth = 40 inch
2) Joist Girder span = 50 feet
3) Number of joist spaces = 8
4) Load at each panel point =12 kips (ASD)

In this example, the corresponding Joist Girder designation is 40G8N12K.

Entering the weight tables for a Joist Girder span of 50 feet, a number of joist spaces equal to 8, a Joist Girder depth of 40 inch, and a panel point loading of 12 kips (ASD), the approximate self-weight of the Joist Girder is 59 pounds per linear foot.

GIRDER SPAN (ft)	JOIST SPACES (ft)	GIRDER DEPTH (in)	JOIST GIRDER WEIGHT -- POUNDS PER LINEAR FOOT LOAD ON EACH PANEL POINT -- KIPS																	ASD		LRFD		
			6	8	10	12	14	16	18	20	24	28	32	36	40	44	48	52	56	60	70	80	90	100
			9	12	15	18	21	24	27	30	36	42	48	54	60	66	72	78	84	90	105	120	135	150
20	2N@ 10.00	20	19	19	19	19	20	24	24	25	30	37	41	46	50	56	62	70	75	75	80	91	121	128
		24	19	19	19	19	20	21	21	25	28	32	36	41	42	49	52	53	66	66	74	83	110	118
		28	19	19	19	19	20	20	21	23	26	28	32	39	40	42	46	48	49	56	58	74	104	108
	3N@ 6.67	20	15	19	19	20	23	24	27	31	36	44	48	54	74	75	81	84	89	96	110	122		
		24	16	16	16	19	20	23	26	27	33	36	45	47	53	56	68	79	82	84	98	108	126	
		28	16	16	16	17	20	24	24	26	31	36	44	46	49	53	57	68	78	79	80	89	119	124
	4N@ 5.00	20	15	19	21	25	29	33	38	41	50	57	65	71	88	97	100	107	120	126	149			
		24	16	17	20	23	26	29	32	35	44	50	55	62	71	85	90	100	102	109	130	154		
		28	16	17	19	22	25	28	30	34	39	49	50	59	63	72	86	91	91	93	113	126	141	160
	5N@ 4.00	20	17	21	26	31	36	39	48	51	62	71	82	99	99	109	120	141	142					
		24	16	20	23	26	30	35	39	43	53	60	68	80	91	101	103	110	120	134	158			
		28	16	18	22	27	28	33	37	39	48	55	64	68	77	93	95	107	111	119	139	162	184	216
	6N@ 3.33	20	19	25	29	36	41	50	57	58	72	82	99	107	118	138	141							
		24	18	22	28	31	37	43	46	53	61	70	85	102	102	111	123	144	147	175				
		28	18	22	26	30	33	40	42	47	58	68	76	83	96	109	112	119	130	139	183	211	223	263
	8N@ 2.50	20	25	32	41	51	58	65	72	82	99	118	139	142										
		24	22	29	36	42	50	54	61	69	86	103	107	128	149	153								
		28	22	29	34	40	47	54	61	67	76	88	107	112	124	135	155	166	196	198	246	277	285	
22	2N@ 11.00	20	21	21	22	22	23	24	24	25	34	39	43	49	55	62	69	76	78	82	90	108	129	130
		24	21	21	22	22	22	23	24	24	30	33	41	41	45	51	55	61	73	76	82	94	112	118
		28	21	21	21	22	22	22	23	24	29	30	33	41	42	46	48	51	58	59	72	81	106	112
	3N@ 7.33	20	18	18	19	22	24	26	29	33	42	45	53	68	70	76	84	88	94	104	120	138		
		24	15	19	19	20	23	24	26	30	35	40	45	48	55	61	74	81	84	92	98	113	127	
		28	16	16	16	19	20	23	24	27	32	36	45	47	52	54	59	74	82	76	86	100	121	126
	4N@ 5.50	20	16	19	23	26	30	36	39	44	55	62	71	82	95	96	106	119	134	144				
		24	15	17	20	25	27	29	34	38	48	52	58	71	79	89	98	101	107	115	144	153		
		28	16	16	19	22	25	28	32	35	40	49	54	60	72	79	87	90	97	109	120	135	158	179
	5N@ 4.40	20	17	24	27	34	38	42	49	55	65	75	96	98	111	126	137	158						
		24	16	20	24	28	33	38	40	48	56	62	73	85	100	101	110	116	133	153				
		28	16	18	22	26	30	32	38	41	51	57	65	73	86	92	102	105	111	126	159	170	183	
	6N@ 3.67	20	21	27	33	39	49	56	57	65	79	97	106	118	137									
		24	19	23	28	32	39	45	51	58	66	82	98	101	109	120	142	144						
		28	18	22	26	30	34	39	44	50	61	70	76	89	102	104	113	127	148	157	181	204	245	280
	8N@ 2.75	20	27	36	43	56	64	71	80	96	106	135	138											
		24	24	31	38	46	53	60	68	75	101	105	125	145	149									
		28	22	28	34	40	47	54	62	69	79	87	106	118	131	152	164	192	214	233	265	304	310	
25	3N@ 8.33	20	18	19	22	26	27	30	37	41	49	59	66	70	76	86	89	97	102	115	137			
		24	18	19	20	22	25	26	28	32	39	43	51	59	67	71	81	84	89	96	111	122		
		28	15	19	19	20	23	24	27	29	34	39	45	47	55	59	67	81	82	83	98	113	126	141
		32	16	16	16	20	21	23	24	27	32	36	44	46	52	54	58	74	81	73	86	100	121	119
		36	16	16	17	17	20	24	24	26	32	36	40	45	48	53	54	68	79	70	80	89	119	124
	4N@ 6.25	20	18	20	25	29	35	39	42	49	55	70	78	93	99	109	119	134	135					
		24	16	19	21	26	29	33	37	40	50	57	64	72	88	97	100	106	120	126	149			
		28	15	17	20	24	25	29	34	37	43	51	58	66	72	89	90	101	102	114	129	153	177	203
		32	16	17	19	21	25	28	32	35	40	49	54	60	69	79	86	91	96	109	117	135	153	188
		36	16	17	19	21	26	26	29	34	38	49	50	56	63	73	85	88	92	94	110	126	142	161
	5N@ 5.00	20	18	25	31	38	43	51	55	58	73	93	100	109	125	134								
		24	17	23	26	32	36	42	47	53	61	75	81	98	102	112	129	140	160					
		28	16	20	24	28	31	37	41	47	56	62	72	79	93	101	106	117	125	152	167	195	215	248
		32	16	19	23	26	30	33	38	41	51	57	65	73	83	93	102	105	111	129	158	169	183	212
		36	17	18	22	26	28	31	36	39	48	54	64	69	75	88	96	101	108	119	133	159	184	188
	6N@ 4.17	20	24	29	38	45	55	58	69	78	94	104	116	134										
		24	20	25	31	37	44	50	56	64	75	97	99	107	118	138								
		28	18	23	28	32	38	44	51	55	67	73	87	101	104	120	134	143	145	176	197	234	256	301
		32	18	22	26	30	34	39	44	50	61	69	77	89	102	105	113	127	148	158	184	215	245	277
		36	18	24	25	30	36	39	43	49	58	67	74	84	98	108	116	117	129	152	185	202	221	263
	8N@ 3.12	20	29	39	48	58	70	78	94	99	115	134												
		24	26	33	41	50	57	65	75	81	99	118	138											
		28	23	30	38	44	53	60	67	75	86	103	116	127	147	188	188	207	215	245	284			
		32	24	28	34	39	47	54	65	71	78	87	105	117	129	152	154	192	193	213	258	292	296	
		36	22	29	34	40	46	52	61	63	76	87	101	114	121	136	148	166	167	197	232	267	274	
	10N@ 2.50	20	38	49	63	78	94	100	115	134														
		24	33	42	54	65	75	89	99	104	130													
		28	30	38	48	56	64	74	84	101	109	134	147	179	207	211	234	272	293	308				
		32	28	36	43	52	62	69	76	87	107	118	130	153	193	203	216	240	257	282				
		36	28	37	44	52	64	71	77	85	100	116	130	151	157	179	201	215	235	253	299			

STANDARD WEIGHTS
JOIST GIRDERS

GIRDER SPAN (ft)	JOIST SPACES (ft)	GIRDER DEPTH (in)	JOIST GIRDER WEIGHT -- POUNDS PER LINEAR FOOT																						
			LOAD ON EACH PANEL POINT -- KIPS																		ASD		LRFD		
			6	8	10	12	14	16	18	20	24	28	32	36	40	44	48	52	56	60	70	80	90	100	
			9	12	15	18	21	24	27	30	36	42	48	54	60	66	72	78	84	90	105	120	135	150	
28	3N@ 9.33	24	18	19	22	24	27	29	36	39	43	53	62	70	71	78	85	89	98	111	130	138			
		28	18	19	20	22	25	26	28	31	39	43	46	55	61	66	76	83	86	96	112	122	132	160	
		32	18	19	19	21	23	24	27	28	34	39	45	48	53	58	66	80	81	86	98	113	126	135	
	4N@ 7.00	24	16	20	24	27	32	38	40	48	55	62	71	82	95	104	106	120	135	144					
		28	15	18	21	25	28	32	36	39	49	56	64	71	79	96	97	106	107	125	147	171	180	206	
		32	15	17	20	23	25	29	33	37	43	50	58	62	70	85	90	99	102	107	129	153	177	185	
	5N@ 5.60	24	18	24	29	34	39	46	52	58	66	78	96	102	111	126	136								
		28	17	21	26	30	35	39	46	50	61	68	77	90	99	107	114	130	142	162	184	213	239	257	
		32	17	20	24	27	32	37	41	44	56	62	70	80	93	102	107	112	119	143	167	197	215	244	
	6N@ 4.67	24	21	28	35	41	49	55	63	70	79	96	106	134	137										
		28	20	24	30	36	42	50	54	58	71	82	99	107	118	138	142	170	174	193	228	261	268		
		32	19	23	28	32	37	43	49	53	64	74	84	101	102	111	123	144	146	176	198	234	244	297	
	7N@ 4.00	24	24	32	41	49	56	64	74	79	96	110	135	156											
		28	22	27	35	43	51	57	62	69	82	99	108	129	140	162	173	195	198	222	265	305			
		32	21	27	31	38	44	52	55	63	74	85	102	108	123	143	146	175	187	207	241	273	276		
	8N@ 3.50	24	28	37	48	55	64	74	79	95	105	134													
		28	25	32	39	50	58	65	72	81	99	108	129	141	172	197	203	231	237	263					
		32	24	29	38	43	53	60	64	70	86	103	113	127	147	149	188	208	210	244	281				
	10N@ 2.80	24	36	46	57	70	79	96	102	117	137														
		28	30	41	50	60	69	82	99	100	120	141	174	203	219	239	265	295	311						
		32	30	38	46	55	66	71	80	93	109	126	147	179	199	212	226	258	274	292					
30	3N@ 10.00	24	18	21	24	27	31	35	38	40	48	58	66	71	80	92	98	117	119	120	137				
		28	18	19	22	25	27	30	35	37	42	49	56	63	70	79	82	93	99	103	121	132	161	183	
		32	18	19	20	22	26	28	31	32	39	46	51	57	64	71	73	83	84	91	99	113	126	141	
		36	19	19	19	21	23	26	28	31	35	39	46	52	57	64	65	73	75	80	94	101	122	126	
	4N@ 7.50	24	18	23	29	33	37	42	49	53	64	76	85	101	104	126	127	149	150						
		28	16	21	25	30	33	37	42	45	53	61	73	81	86	103	104	126	128	144	156	170	192	231	
		32	16	18	22	26	30	34	37	43	51	55	62	70	77	87	103	105	116	121	148	157	180	202	
		36	16	17	22	24	27	31	34	36	46	52	59	64	74	78	88	91	105	108	119	151	159	187	
	5N@ 6.00	24	19	25	30	37	43	51	55	58	73	86	96	109	125	134									
		28	17	23	27	32	37	44	47	53	61	75	88	97	102	112	128	138	159	170	192	224	242	270	
		32	17	21	24	29	35	39	43	48	56	63	77	90	100	101	107	117	133	154	176	195	227	244	
		36	17	20	24	27	31	36	40	43	51	60	70	80	86	94	103	110	118	135	157	178	185	229	
	6N@ 5.00	24	24	29	37	45	52	58	66	73	94	104	116	134											
		28	20	27	32	38	44	50	57	65	75	97	99	107	137	140	170	180	186	192	227	284			
		32	19	24	29	34	40	45	51	58	65	82	98	100	109	121	142	144	174	183	197	233	257	299	
		36	18	23	26	31	37	41	46	52	61	70	84	101	102	111	123	126	148	155	179	202	246	272	
	8N@ 3.75	24	32	40	51	63	73	83	99	111	124	146													
		28	30	37	44	53	61	73	80	86	114	126	149	170	172	192	220	224	258	284					
		32	26	34	42	49	55	63	71	79	104	117	130	154	161	184	203	208	240	243	307				
		36	23	32	39	46	54	61	69	76	89	108	121	134	154	169	189	194	212	219	256	313			
	10N@ 3.00	24	38	51	66	78	99	111	123	134															
		28	36	47	57	69	80	94	113	116	138	161	183	204	226	249	282								
		32	31	39	52	58	74	82	95	105	129	142	165	185	205	222	252	270	299						
		36	30	39	48	54	68	79	84	91	119	132	151	170	191	210	215	248	261	279					
32	3N@ 10.67	24	19	21	26	27	34	38	40	42	54	61	70	75	84	88	102	102	113	151	160				
		28	17	18	24	26	28	31	34	37	43	55	60	69	70	76	85	89	93	111	121	138	162	196	
		32	17	18	21	25	26	28	32	34	39	44	54	61	62	67	77	80	86	96	112	122	132	160	
		36	17	19	20	23	25	26	28	30	38	40	45	51	53	58	67	81	85	91	98	113	127	136	
	4N@ 8.00	24	19	23	26	32	37	40	47	55	61	72	86	94	103	114	133	134	162						
		28	18	20	24	28	32	37	40	45	55	62	70	78	94	96	105	121	135	144	167	189	235	250	
		32	15	20	22	25	29	32	36	39	49	56	64	71	83	94	97	102	107	125	147	171	180	207	
		36	16	17	21	24	26	30	34	36	43	50	58	65	70	85	90	99	102	107	129	153	177	185	
	5N@ 6.40	24	20	27	33	39	44	51	57	65	77	93	100	123	133										
		28	18	24	28	34	39	46	52	58	66	74	96	101	110	126	137	158	167	180	202	234	253	295	
		32	17	22	26	32	35	41	46	53	61	68	77	90	99	105	114	130	142	162	184	204	240	255	
		36	17	21	24	27	33	37	42	47	56	62	70	79	93	102	106	117	120	144	167	187	203	233	
	6N@ 5.33	24	24	31	39	47	55	61	69	76	94	103	133	134											
		28	21	27	35	40	48	55	60	67	79	96	105	117	137	158	170	190	191	222	246	274			
		32	20	25	30	36	42	50	54	58	71	82	99	103	118	139	142	170	174	193	228	258	268		
		36	19	24	28	34	38	44	49	55	66	73	84	101	102	111	123	144	146	176	206	234	244	293	
	8N@ 4.00	24	32	40	54	61	72	86	93	103	133														
		28	27	35	45	55	63	70	80	95	105	134	137	169	189	198	221	242	264	274					
		32	25	32	39	50	58	65	71	81	99	109	120	141	173	186	202	214	228	261	295				
		36	24	31	38	43	53	59	67	71	86	103	113	127	147	181	188	207	212	242	277	315			

GIRDER SPAN (ft)	JOIST SPACES (ft)	GIRDER DEPTH (in)	JOIST GIRDER WEIGHT -- POUNDS PER LINEAR FOOT LOAD ON EACH PANEL POINT -- KIPS																	ASD		LRFD		
			6	8	10	12	14	16	18	20	24	28	32	36	40	44	48	52	56	60	70	80	90	100
			9	12	15	18	21	24	27	30	36	42	48	54	60	66	72	78	84	90	105	120	135	150
35	4N@ 8.75	28	19	23	27	31	36	41	46	52	60	74	79	94	100	111	117	137	138	156	185	194	237	256
		32	18	21	24	28	33	37	39	45	53	60	73	80	92	100	106	112	127	144	159	171	196	229
		36	16	20	23	27	30	33	37	41	51	55	62	74	83	94	97	107	113	115	147	162	184	194
		40	16	17	21	26	27	30	37	38	46	52	61	64	75	90	95	96	108	107	129	153	177	185
	5N@ 7.00	28	20	26	32	37	43	52	57	59	73	86	100	109	126	136	137	138	139	190	224	258	273	
		32	18	24	29	34	37	45	50	53	66	75	88	100	102	112	128	138	139	170	194	224	253	292
		36	17	23	27	29	35	40	46	48	62	68	77	90	100	104	115	131	133	153	175	205	240	254
		40	17	22	25	27	33	37	43	47	56	63	70	80	95	102	107	115	125	144	166	199	206	223
	6N@ 5.83	28	24	30	37	44	52	58	65	73	93	103	115	134	154	166	187	202	213	230	270			
		32	21	27	33	38	46	53	57	65	79	96	100	117	139	140	170	172	191	202	236	281		
		36	20	25	31	36	41	48	54	58	70	81	99	102	113	121	142	144	174	187	211	241	269	314
		40	20	24	28	34	38	44	49	55	64	77	84	101	104	115	123	145	146	168	208	215	244	273
	7N@ 5.00	28	27	34	43	52	59	66	74	86	101	115	135	167	178	190	215	233	245	268				
		32	24	30	39	47	53	61	67	75	97	103	118	137	160	171	192	196	226	238	282			
		36	23	28	35	42	48	55	62	69	82	99	105	120	141	144	173	186	196	211	250	291		
		40	22	27	32	39	44	50	55	63	73	86	102	107	118	133	147	166	178	188	219	266	276	
	8N@ 4.38	28	30	39	48	59	69	78	94	98	115	136	165	187	202	217	243	269	289	296				
		32	27	36	42	53	61	69	79	88	101	118	138	170	172	191	219	223	245	272				
		36	26	32	39	48	55	62	71	77	99	109	121	141	164	175	202	207	232	248	294			
		40	24	30	37	44	54	60	65	73	86	102	113	127	147	149	185	198	210	215	273	310		
38	4N@ 9.50	32	19	21	26	31	34	39	43	48	58	67	74	87	100	101	111	127	138	144	168	190	237	248
		36	17	21	24	28	33	35	39	44	53	60	74	75	93	97	106	112	123	125	153	170	180	225
		40	16	20	23	27	30	34	37	41	51	55	62	74	83	94	98	107	109	115	147	153	177	202
		44	16	20	22	26	28	30	35	38	46	52	58	65	75	90	95	95	108	112	124	150	160	177
	5N@ 7.60	32	20	25	31	36	42	46	52	59	70	86	96	101	111	126	137	158	177	185	205	237	253	
		36	20	24	28	33	38	45	47	53	64	74	89	98	103	112	129	138	160	167	184	215	242	270
		40	20	23	26	31	35	40	46	48	59	70	78	91	101	105	113	117	134	153	176	203	216	242
		44	20	22	25	30	33	39	41	48	56	63	75	80	93	102	107	111	118	145	166	199	204	229
	6N@ 6.33	32	24	30	35	41	49	55	62	70	86	98	105	125	136	167	175	189	196	222	247	293		
		36	21	27	33	39	47	50	57	61	75	89	100	107	118	141	142	172	183	194	227	250	273	
		40	21	25	31	36	40	48	55	59	71	82	99	102	109	121	143	142	174	182	206	233	257	294
		44	20	24	29	33	38	44	49	55	64	77	84	102	104	115	123	145	147	169	190	209	245	270
	8N@ 4.75	32	29	38	47	56	64	74	86	95	105	135	156	169	189	217	229	247	271	299				
		36	28	35	42	50	57	65	76	81	101	113	138	140	172	192	212	222	245	260	315			
		40	26	32	40	48	55	62	67	78	100	103	121	142	144	175	202	205	222	238	283			
		44	24	30	39	47	51	57	64	71	86	102	113	127	147	149	187	199	210	222	272	309		
40	4N@ 10.00	32	20	23	29	37	40	47	50	56	64	73	86	103	114	126	128	149	151	164	177	195	238	249
		36	19	22	29	31	37	40	44	51	57	65	74	87	103	104	125	127	128	144	168	180	210	228
		40	18	22	25	29	33	37	40	47	52	62	73	77	87	96	104	117	127	132	148	171	181	203
		44	17	20	24	29	31	36	38	41	49	59	66	74	78	84	96	106	106	111	129	150	177	186
		48	17	20	24	25	30	32	37	39	48	53	59	67	78	78	85	99	106	108	120	144	159	178
	5N@ 8.00	32	21	26	32	38	43	52	55	62	73	86	101	109	124	134	154	167	177	190	224	257	278	
		36	20	24	30	34	39	45	53	55	66	74	88	102	102	112	128	138	159	170	194	235	252	292
		40	20	24	27	32	37	41	46	51	62	68	77	90	100	105	115	130	142	162	183	214	240	253
		44	20	23	29	32	37	41	49	50	58	70	82	84	99	102	118	130	141	144	168	198	212	242
		48	20	23	26	31	34	40	41	50	57	68	75	85	95	100	119	120	132	138	159	182	185	226
	6N@ 6.67	32	24	30	38	44	52	58	65	72	93	100	115	133	154	166	186	190	213	221	269			
		36	22	27	34	39	47	53	60	67	79	97	102	117	137	141	170	172	191	194	235	271		
		40	21	26	30	36	43	48	54	62	71	82	99	103	114	130	142	163	174	185	219	254	271	
		44	21	24	28	36	40	47	51	55	66	78	91	102	107	116	134	142	146	177	208	234	247	291
		48	21	24	31	36	42	46	53	57	69	79	86	100	109	112	133	135	143	174	182	204	237	267
	7N@ 5.71	32	26	33	43	52	58	66	74	86	101	115	135	167	178	191	205	233	245	258				
		36	24	31	39	47	53	61	67	75	97	103	117	136	159	171	191	206	219	237	280			
		40	24	29	35	43	49	55	62	69	82	99	105	119	140	162	174	187	199	213	256	298		
		44	22	28	33	39	48	55	59	64	78	92	102	111	122	143	165	176	187	200	230	269	276	
		48	23	28	36	41	48	54	61	66	80	86	108	110	116	136	164	167	174	192	216	256	268	
	8N@ 5.00	32	29	38	48	58	67	78	94	96	115	135	165	188	195	217	243	259	280					
		36	27	36	46	53	60	68	80	88	102	118	137	170	180	193	219	231	245	276				
		40	25	34	39	49	58	65	72	82	99	109	120	141	173	189	205	220	226	258	291			
		44	27	33	39	47	56	63	70	75	93	103	120	136	147	185	195	205	216	240	275			
		48	25	32	42	47	55	62	69	80	90	104	122	136	155	170	182	189	210	218	261	296	310	
	10N@ 4.00	32	39	51	64	79	92	112	123	125	149	177	195	220	244	268								
		36	36	47	60	69	81	94	103	125	150	161	182	211	234	249	280	290						
		40	36	45	56	66	75	82	96	115	129	152	173	184	216	231	257	274	304					
		44	32	41	51	60	71	82	84	99	119	143	161	178	198	220	234	254	280	297				
		48	32	41	52	58	68	76	85	94	121	134	152	169	181	201	215	242	256	275				

STANDARD WEIGHTS
JOIST GIRDERS

GIRDER SPAN (ft)	JOIST SPACES (ft)	GIRDER DEPTH (in)	JOIST GIRDER WEIGHT -- POUNDS PER LINEAR FOOT LOAD ON EACH PANEL POINT -- KIPS																ASD		LRFD		
			6	8	10	12	14	16	18	20	24	28	32	36	40	44	48	52	56	60	70	80	90	100
			9	12	15	18	21	24	27	30	36	42	48	54	60	66	72	78	84	90	105	120	135	150
42	4N@ 10.50	32	21	25	29	34	38	43	49	53	67	74	86	99	101	112	125	134	138	163	195	224	250	275
		36	19	22	26	32	35	39	44	47	58	67	73	87	95	101	112	118	129	145	168	191	237	246
		40	19	21	24	28	34	36	41	45	53	61	73	76	93	97	97	113	122	125	147	171	194	210
		44	19	20	23	27	31	34	38	42	51	55	62	74	84	94	97	108	109	118	138	159	179	203
		48	19	21	24	26	29	32	36	39	47	54	62	65	75	90	95	97	108	112	130	150	160	177
	5N@ 8.40	32	22	28	35	41	45	52	57	66	74	88	100	110	125	152	166	176	189	199	225	258		
		36	21	25	31	36	42	46	52	59	70	85	96	102	111	126	137	158	168	179	203	235	253	275
		40	21	24	28	33	39	44	51	54	64	74	89	98	103	113	129	130	160	171	183	213	241	263
		44	20	24	27	31	37	40	46	52	59	69	78	91	101	105	113	126	134	151	176	207	216	242
		48	20	23	27	30	35	39	42	48	57	63	75	81	95	102	107	115	118	145	168	199	206	229
	6N@ 7.00	32	25	32	39	45	55	61	69	77	93	103	124	135	163	175	187	202	213	239	277			
		36	23	30	35	41	49	56	60	67	79	96	105	117	137	158	169	190	204	207	243	282		
		40	21	26	33	39	46	54	57	61	75	89	100	108	119	141	142	172	183	194	227	249	267	
		44	21	24	31	35	41	48	54	59	71	81	100	102	109	121	143	142	174	176	208	233	254	302
		48	20	25	29	33	39	44	49	56	64	77	85	102	104	115	124	145	147	169	191	216	246	269
	7N@ 6.00	32	28	36	45	52	65	72	85	93	102	125	154	166	187	200	225	239	252	277				
		36	26	34	40	49	56	67	74	79	98	110	127	138	169	181	194	208	235	248	289			
		40	24	31	38	46	54	61	68	75	90	101	113	129	142	172	184	195	208	230	267	297		
		44	23	29	35	41	49	55	63	70	78	100	106	116	132	145	166	184	198	203	246	281	299	
		48	23	28	34	39	44	50	56	64	73	92	102	108	118	136	149	169	184	190	220	255	265	
	8N@ 5.25	32	32	40	51	62	72	78	94	100	124	135	166	188	213	235	245	268						
		36	27	38	46	56	64	74	79	96	105	126	138	169	189	208	220	246	263	274				
		40	26	35	42	51	57	65	76	81	101	113	138	141	173	192	211	222	237	256	311			
		44	25	32	39	49	55	63	70	78	99	107	121	142	147	175	201	206	223	238	283			
		48	26	32	41	48	56	63	67	74	93	103	112	128	148	169	188	198	210	230	271	307		
	10N@ 4.20	32	38	52	62	77	94	101	114	134	164	187	215	239	264	291	308							
		36	36	46	60	70	86	97	102	112	140	179	193	223	244	268	298							
		40	34	45	54	64	75	89	99	104	129	161	182	205	218	237	268	301	308					
		44	31	41	52	61	70	79	91	100	114	143	164	185	208	221	241	269	284	310				
		48	30	39	49	56	66	72	80	93	107	125	146	168	199	211	226	252	267	285				
45	4N@ 11.25	36	21	25	28	33	38	42	46	52	62	72	79	95	100	112	117	128	138	154	178	193	238	250
		40	21	22	27	31	35	39	44	47	55	64	75	87	95	101	112	113	128	144	169	180	211	228
		44	21	22	24	29	33	37	39	45	53	61	74	76	89	95	102	108	114	125	148	171	193	215
		48	21	22	24	28	31	34	38	40	51	55	63	75	83	94	95	107	109	115	139	164	180	204
		52	22	23	24	27	29	33	37	39	47	52	60	66	76	91	95	96	109	112	125	153	161	178
	5N@ 9.00	36	22	27	33	38	44	52	55	63	74	86	101	109	125	136	155	167	177	191	224	256	278	
		40	21	25	30	36	42	45	53	56	68	75	88	102	111	122	128	156	159	180	203	234	253	287
		44	21	24	29	34	38	44	46	54	65	74	85	90	103	110	123	130	142	159	184	215	248	263
		48	21	24	27	32	36	41	45	52	59	67	75	91	95	106	112	118	134	151	179	208	232	241
		52	21	24	27	30	35	39	42	48	57	64	75	81	94	98	107	117	119	145	169	200	212	225
	6N@ 7.50	36	24	31	38	45	52	58	66	74	93	100	115	134	154	167	187	190	203	221	258			
		40	23	28	34	40	47	53	60	67	79	97	103	117	137	140	170	181	191	203	244	271		
		44	21	27	32	38	46	50	54	62	76	90	100	107	118	139	142	172	175	194	228	252	280	
		48	21	26	30	36	42	48	55	59	69	78	92	102	110	122	143	143	167	177	207	233	265	289
		52	21	25	29	34	39	44	50	56	64	77	85	102	102	116	124	136	148	169	191	214	246	268
	7N@ 6.43	36	27	35	44	52	58	66	74	86	101	115	135	158	176	191	206	233	246	258				
		40	26	33	40	47	54	61	67	75	97	105	127	138	160	179	192	206	227	237	288			
		44	24	30	39	46	54	61	62	69	90	100	113	129	143	163	184	196	201	221	256	297		
		48	23	29	36	41	49	55	63	70	79	92	107	117	133	145	166	177	190	203	246	277	299	
		52	23	28	34	39	45	50	56	65	73	93	102	109	118	136	149	170	183	194	224	254	274	
	8N@ 5.62	36	30	38	48	58	67	78	94	98	114	135	165	188	193	216	243	259	280					
		40	28	36	46	53	61	68	80	89	105	118	137	170	181	196	219	232	247	275				
		44	27	34	41	51	58	66	73	81	99	109	130	141	173	185	202	215	226	249	298			
		48	26	32	39	47	55	63	68	74	92	104	116	142	146	176	193	208	216	240	270			
		52	28	33	42	48	54	59	67	71	94	102	112	127	148	167	188	198	210	219	259	304		
	9N@ 5.00	36	34	45	55	66	74	88	98	104	135	165	179	203	229	241	271	294						
		40	31	39	49	61	69	80	89	100	113	138	168	188	196	223	247	263	293					
		44	31	39	48	58	66	76	89	99	108	132	162	178	190	216	241	248	275	302				
		48	29	37	47	55	63	70	79	91	106	117	133	166	188	206	224	235	251	279	298			
		52	28	36	46	55	60	70	73	84	102	112	135	148	169	197	200	226	231	259	293			
	10N@ 4.50	36	38	49	60	73	86	98	105	116	137	177	192	220	245	268								
		40	35	47	60	66	76	90	102	112	140	170	182	211	236	264	289	299						
		44	33	46	54	64	72	89	99	104	130	142	173	203	216	239	260	274	302					
		48	31	40	49	62	71	78	91	100	114	134	164	186	205	219	240	267	279	304				
		52	31	39	50	56	67	72	80	93	107	123	147	168	190	211	224	251	264	282				

GIRDER SPAN (ft)	JOIST SPACES (ft)	GIRDER DEPTH (in)	JOIST GIRDER WEIGHT -- POUNDS PER LINEAR FOOT																					
			LOAD ON EACH PANEL POINT -- KIPS																ASD		LRFD			
			6	8	10	12	14	16	18	20	24	28	32	36	40	44	48	52	56	60	70	80	90	100
			9	12	15	18	21	24	27	30	36	42	48	54	60	66	72	78	84	90	105	120	135	150
48	5N@ 9.60	36	26	31	37	45	52	59	66	71	87	111	113	135	136	152	167	176	189	200	228	269		
		40	23	29	35	41	46	52	59	68	77	92	112	114	136	138	155	161	178	188	203	237	272	
		44	22	27	32	37	44	48	54	61	69	80	93	113	116	126	139	150	160	174	195	226	253	275
		48	21	25	30	36	40	48	48	55	69	78	90	96	115	116	128	140	142	166	185	219	241	263
		52	21	25	29	33	39	42	50	54	62	71	82	92	99	117	118	130	141	157	178	206	224	241
		56	21	24	29	33	38	40	46	50	59	71	79	85	100	100	119	120	133	146	170	200	212	226
	6N@ 8.00	36	28	35	42	51	62	70	78	83	100	122	134	147	163	175	189	202	222	233	277			
		40	25	33	39	47	56	64	71	79	93	112	124	137	148	168	179	189	212	222	247	282		
		44	24	31	36	45	50	57	65	73	81	102	115	127	138	151	168	173	192	204	236	262	292	
		48	23	30	35	40	48	52	59	67	78	95	105	116	129	141	160	166	175	186	220	252	279	310
		52	23	27	32	38	46	51	59	60	75	83	97	107	130	131	144	162	169	178	208	234	259	290
		56	22	27	31	37	42	48	54	61	69	80	91	107	120	132	134	153	165	166	191	208	246	267
	8N@ 6.00	36	36	45	56	64	78	91	100	122	134	153	167	186	213	234	257	278						
		40	33	42	51	59	70	80	92	101	124	148	157	170	191	208	229	248	272	288				
		44	32	39	49	55	65	74	82	95	114	127	150	161	185	193	212	223	244	268				
		48	30	37	47	53	60	68	76	84	105	129	131	154	174	189	197	216	226	247	290			
		52	30	36	44	51	59	65	71	80	99	119	132	146	164	185	195	209	221	239	283			
		56	28	36	43	49	57	63	69	78	90	109	123	136	155	168	189	198	209	228	258	294		
	9N@ 5.33	36	44	55	70	79	91	99	121	122	146	165	190	215	237	252	279							
		40	42	52	63	74	88	93	101	113	136	156	179	195	218	230	256	284						
		44	39	50	59	69	83	91	94	103	126	150	168	182	199	222	236	257	285	302				
		48	37	46	56	66	76	85	94	97	118	130	162	175	190	217	224	247	273	290				
		52	36	46	54	63	72	80	95	101	108	132	152	167	188	212	220	242	251	277				
		56	35	44	53	62	69	80	89	98	103	123	137	165	180	207	211	236	240	271	314			
	12N@ 4.00	36	52	71	84	100	123	135	148	167	190	230	256	289										
		40	48	65	76	93	113	125	137	149	177	206	233	260	288									
		44	44	57	73	82	102	115	126	139	159	193	211	239	271	297								
		48	41	53	67	76	88	104	117	130	153	175	197	221	246	276	301							
		52	39	52	61	76	84	97	107	131	144	168	190	212	237	261	280	306						
		56	38	49	61	70	81	91	108	122	135	165	183	195	217	242	266	287	312					
50	5N@ 10.00	40	23	30	38	44	47	56	60	68	79	93	113	124	136	138	155	165	177	182	216	257	279	
		44	22	29	34	40	46	51	56	61	76	89	94	113	126	137	139	157	172	180	203	236	255	292
		48	22	28	31	38	42	48	55	61	69	78	94	96	115	127	139	141	160	172	192	207	241	262
		52	22	25	31	35	40	45	49	55	62	74	82	96	116	117	129	141	142	161	186	203	227	243
		56	22	25	30	32	40	43	50	51	63	71	83	92	99	117	119	131	142	146	169	199	219	231
		60	20	24	30	33	36	42	46	51	58	65	76	86	96	101	120	121	133	142	166	174	198	226
	6N@ 8.33	40	28	34	42	48	56	64	71	80	100	112	124	147	155	167	178	191	204	231	258			
		44	24	31	38	47	50	57	65	73	85	102	124	127	149	159	168	181	191	213	246	270		
		48	23	30	37	40	49	57	65	67	82	95	115	127	129	151	162	173	184	195	229	250	292	
		52	23	30	36	40	46	52	59	67	75	84	105	117	129	131	153	162	176	188	218	242	269	300
		56	23	26	33	39	42	51	54	60	72	84	98	107	120	132	144	163	164	176	209	225	257	280
		60	23	27	33	38	43	49	53	61	70	80	87	102	110	123	134	154	165	171	182	207	247	264
	8N@ 6.25	40	31	39	51	59	67	78	86	96	110	135	166	177	193	217	244	259	281					
		44	29	37	47	53	61	70	80	96	103	118	139	170	182	198	221	230	254	276				
		48	27	35	42	51	58	69	76	81	99	114	130	142	175	186	201	224	242	255	297			
		52	25	33	40	49	55	63	70	78	99	107	121	141	164	178	197	207	218	236	281			
		56	29	36	42	47	56	64	68	78	94	108	118	137	148	169	192	204	212	230	271	315		
		60	27	35	40	47	55	61	69	74	83	103	110	123	139	149	182	200	208	215	258	291	312	
	9N@ 5.56	40	34	44	55	66	74	86	96	104	134	155	179	203	219	242	256	286						
		44	32	40	53	61	69	80	88	98	113	138	169	195	207	223	244	267	293					
		48	32	42	52	58	69	77	90	99	111	133	163	184	201	216	241	250	274	300				
		52	31	40	47	58	66	74	79	92	106	126	143	178	192	207	222	244	254	278	312			
		56	30	38	46	55	60	68	77	89	102	116	135	166	181	197	211	237	251	272	309			
		60	32	38	49	53	61	70	75	83	97	111	125	141	179	192	209	227	239	266	303			
	10N@ 5.00	40	38	49	60	74	87	96	104	116	139	177	194	220	244	269								
		44	36	47	60	68	84	96	102	112	137	170	188	211	235	264	289	294						
		48	34	46	54	65	76	89	99	103	130	159	182	205	217	239	268	284	298					
		52	34	45	52	62	70	79	91	100	114	134	164	185	207	222	239	270	282	305				
		56	32	41	48	60	70	76	87	93	107	134	146	174	198	211	232	250	279	283				
		60	31	40	49	57	66	73	81	94	109	119	138	169	180	201	225	230	253	272				
	12N@ 4.17	40	49	65	80	100	112	125	147	157	180	206	241	269										
		44	44	57	73	86	102	126	127	149	168	192	227	248	280	302								
		48	41	58	67	82	96	115	127	130	154	184	199	230	254	284	310							
		52	39	53	68	76	84	105	118	130	154	176	189	219	244	263	289	314						
		56	40	52	61	70	85	99	108	122	135	164	182	210	228	252	270	296						
		60	39	49	61	70	82	88	104	112	135	166	175	196	219	242	258	274	302					

STANDARD WEIGHTS
JOIST GIRDERS

GIRDER SPAN (ft)	JOIST SPACES (ft)	GIRDER DEPTH (in)	JOIST GIRDER WEIGHT -- POUNDS PER LINEAR FOOT LOAD ON EACH PANEL POINT -- KIPS															ASD		LRFD		
			6	8	10	12	14	16	18	20	22	24	26	28	30	35	40	45	50	55	60	65
			9	12	15	18	21	24	27	30	33	36	39	42	45	52.5	60	67.5	75	82.5	90	97.5
55	5N@ 11.00	44	24	29	35	41	47	53	59	63	71	82	83	86	97	110	127	141	157	174	193	207
		48	23	28	32	38	43	49	56	60	64	71	73	83	93	104	121	133	148	167	179	193
		52	23	27	32	36	42	44	52	57	65	66	74	74	90	99	114	124	139	156	170	181
		56	24	26	31	36	39	44	51	53	58	66	66	74	79	92	110	121	135	148	162	173
		60	24	27	31	35	38	45	47	52	60	61	67	68	80	88	101	115	124	138	147	163
		66	24	26	28	34	37	42	47	48	55	56	62	69	73	83	99	109	118	128	143	155
	6N@ 9.17	44	26	33	38	45	52	59	66	75	86	86	98	101	117	136	155	174	189	207	232	247
		48	24	31	36	44	50	56	64	68	75	87	89	94	109	122	147	155	181	194	214	237
		52	24	29	35	41	48	54	61	64	72	75	80	88	106	117	139	149	164	188	196	208
		56	24	28	35	39	47	52	55	63	70	71	78	82	101	113	122	140	158	176	187	195
		60	24	29	33	38	43	48	55	60	64	71	75	80	95	108	116	132	153	158	179	187
		66	22	28	31	36	40	47	50	56	62	65	73	73	86	102	112	128	136	143	160	181
	7N@ 7.86	44	28	36	44	53	59	70	75	87	97	102	111	120	135	152	178	189	219	236	257	274
		48	27	34	43	51	56	65	72	76	89	98	103	110	120	135	171	184	207	228	241	263
		52	26	33	39	46	55	62	69	74	86	91	100	105	116	126	160	175	190	207	234	252
		56	25	31	38	46	53	55	64	70	79	87	92	101	111	118	148	158	182	203	221	240
		60	24	30	36	41	49	56	64	68	72	81	93	94	108	111	140	141	169	192	203	224
		66	24	30	36	40	48	52	58	65	70	74	83	84	103	106	129	134	159	177	196	208
	9N@ 6.11	44	34	46	55	67	74	87	98	105	116	135	137	158	169	199	229	240	284			
		48	32	40	53	61	69	81	97	103	107	118	129	139	165	183	208	238	259	291		
		52	33	43	52	65	73	77	90	104	105	114	125	133	157	177	203	231	249	273	301	
		56	32	43	51	59	67	75	87	92	105	107	117	128	143	161	193	217	242	259	286	302
		60	32	40	47	56	67	71	80	93	95	108	109	118	139	145	188	199	224	248	277	291
		66	31	39	46	54	61	71	78	83	91	97	111	113	127	136	172	185	207	222	255	269
	11N@ 5.00	44	43	55	67	87	97	106	126	137	158	178	180	193	208	246	285					
		48	39	54	65	76	89	103	112	128	139	160	171	183	197	235	263	272				
		52	37	52	62	73	88	99	105	115	131	142	161	174	185	211	243	266	302			
		56	39	48	60	68	80	93	102	107	118	134	146	166	174	198	230	259	290	304		
		60	37	47	58	67	77	82	95	108	110	121	137	148	164	191	227	248	275	289		
		66	36	45	54	65	74	82	97	98	113	117	126	141	151	184	206	226	261	275	301	308
60	5N@ 12.00	48	27	33	39	44	51	57	63	69	76	87	89	94	98	108	128	152	164	180	190	208
		52	27	31	36	44	47	52	60	65	69	77	85	90	94	103	125	133	155	168	179	189
		56	24	30	34	41	45	52	59	63	69	74	78	87	90	100	116	128	139	156	173	185
		60	24	29	34	40	45	49	53	60	66	70	75	80	87	95	112	121	135	145	164	175
		66	24	30	33	36	42	47	51	56	61	67	72	73	81	92	102	117	123	133	148	167
		72	25	27	31	36	39	45	48	56	56	63	69	70	75	83	99	110	118	129	144	150
	6N@ 10.00	48	29	36	41	49	60	67	72	80	93	93	112	113	119	128	156	174	189	205	227	242
		52	28	33	39	48	57	62	69	78	80	94	94	113	116	122	147	159	181	195	214	237
		56	25	33	39	48	51	58	66	69	79	83	95	96	106	107	139	150	174	187	198	222
		60	24	32	39	43	50	57	63	70	75	83	83	96	101	103	123	133	165	176	187	205
		66	24	32	34	42	50	52	61	65	69	77	84	85	96	98	119	126	151	167	179	196
		72	24	28	34	41	44	52	54	63	68	71	75	87	87	93	113	119	145	156	169	182
	8N@ 7.50	48	34	43	56	64	72	80	93	112	123	125	136	148	155	173	194	233	248	262		
		52	31	40	50	58	72	81	94	103	114	125	127	139	146	174	191	209	231	251	276	292
		56	31	38	49	58	66	75	83	96	104	116	127	129	139	148	176	192	215	240	251	269
		60	32	39	47	53	61	69	77	85	98	106	118	122	124	140	170	184	205	229	242	260
		66	33	41	46	53	62	70	78	82	90	100	108	120	122	123	161	171	198	207	231	251
		72	31	36	46	52	59	66	73	80	90	92	104	110	114	118	150	158	190	202	226	244
	10N@ 6.00	48	37	49	60	74	87	97	105	118	137	138	167	180	190	233	245	264				
		52	38	50	64	71	88	97	103	113	130	138	160	173	181	208	237	257				
		56	37	46	58	65	76	90	104	105	123	131	143	160	172	193	228	251	281	305		
		60	37	45	57	66	73	86	93	104	111	126	134	159	167	182	217	244	270	288		
		66	37	49	56	65	74	85	95	102	120	122	134	145	146	164	199	218	242	262	292	307
		72	33	42	50	59	69	74	83	96	98	111	111	121	142	158	193	201	226	250	281	296
	12N@ 5.00	48	46	59	75	87	102	111	135	158	169	181	194	207	233	250	291					
		52	45	57	69	88	98	104	118	139	160	169	183	196	206	241	283					
		56	41	55	66	77	91	104	113	129	140	162	174	185	198	235	266	285				
		60	39	54	64	74	91	102	106	121	133	145	165	177	188	205	245	263	309			
		66	41	53	62	77	87	100	110	119	134	147	164	171	182	194	230	251	283	297		
		72	38	50	60	69	77	86	100	110	114	127	142	151	165	183	218	245	270	286	314	
	15N@ 4.00	48	64	80	102	124	136	158	170	189	209	235	252	267	293							
		52	57	74	94	114	127	150	161	182	193	212	232	252	268							
		56	53	71	83	104	127	140	153	171	186	198	215	234	247	276						
		60	51	68	83	98	118	132	144	162	178	189	207	219	235	261	308					
		66	49	62	81	87	110	123	136	153	167	183	193	210	217	253	289					
		72	46	64	77	90	106	125	139	142	160	171	179	200	208	248	276	289				

GIRDER SPAN (ft)	JOIST SPACES (ft)	GIRDER DEPTH (in)	JOIST GIRDER WEIGHT -- POUNDS PER LINEAR FOOT																			
			LOAD ON EACH PANEL POINT -- KIPS														ASD		LRFD			
			6	8	10	12	14	16	18	20	22	24	26	28	30	35	40	45	50	55	60	65
			9	12	15	18	21	24	27	30	33	36	39	42	45	52.5	60	67.5	75	82.5	90	97.5
65	6N@ 10.83	52	30	39	45	54	61	69	78	83	95	97	115	116	122	137	157	174	192	208	227	240
		56	29	35	42	49	58	63	70	80	84	97	97	117	119	129	148	159	181	201	206	231
		60	29	34	41	50	56	64	71	76	82	92	98	99	111	117	139	150	173	190	198	212
		66	26	33	40	45	51	58	65	73	78	83	87	100	103	106	124	142	165	178	188	200
		72	27	32	37	43	49	54	60	68	76	80	87	89	93	97	117	129	147	164	171	186
	8N@ 8.12	52	38	44	58	66	74	83	97	115	127	129	141	153	161	174	195	234	249	262	286	
		56	34	43	52	63	74	83	97	105	118	129	131	143	151	168	183	209	231	251	277	286
		60	33	41	51	60	69	77	85	99	108	119	130	133	139	151	179	204	214	239	260	269
		66	33	42	49	56	63	75	80	89	101	110	122	124	135	141	170	190	204	229	244	252
		72	39	42	47	56	65	73	78	89	92	104	113	125	131	137	166	182	201	213	238	249
	9N@ 7.22	52	38	49	62	74	83	97	116	128	129	142	153	158	169	190	229	249	284			
		56	39	48	59	68	81	98	106	118	130	142	144	155	161	183	208	238	259	273		
		60	38	47	58	69	78	86	100	109	120	132	145	146	152	177	199	226	240	261	294	
		66	37	44	53	64	72	81	89	103	112	124	136	138	144	162	196	209	235	254	286	305
		72	35	44	52	62	71	79	91	91	108	115	127	140	140	153	182	195	225	249	266	285
	10N@ 6.50	52	41	58	67	82	97	116	128	131	154	155	168	180	191	233	245	276				
		56	40	52	68	77	91	107	119	132	144	151	165	175	181	208	238	262	289			
		60	40	51	61	74	87	100	109	122	134	146	162	172	182	199	228	254	280	298		
		66	39	50	60	72	82	90	103	113	125	138	140	163	169	183	218	245	263	274	296	
		72	37	47	56	67	76	87	93	110	127	129	141	143	146	165	202	219	241	252	293	
	11N@ 5.91	52	45	59	75	89	106	118	131	153	158	178	186	194	209	237	273					
		56	44	60	69	85	99	119	132	144	156	161	182	187	197	226	262	269				
		60	44	55	70	79	92	109	122	134	147	162	170	184	186	214	245	258				
		66	42	54	64	73	90	104	113	125	139	147	164	166	180	188	237	248	296			
		72	41	51	62	77	88	93	110	118	131	144	156	173	169	186	228	240	265	270		
	13N@ 5.00	52	55	72	89	106	130	142	156	169	180	194	208	231	248	267						
		56	53	69	86	99	120	133	146	161	171	186	202	218	242	257						
		60	50	64	77	93	108	131	134	158	164	180	188	201	220	245	299					
		66	49	62	75	87	102	122	134	137	161	167	179	195	205	233	277	290				
		72	46	58	72	85	90	113	127	138	141	170	171	174	187	194	251	256	314			
70	7N@ 10.00	56	30	39	46	56	64	71	83	88	102	102	110	121	136	167	178	203	218	244	257	275
		60	30	37	44	52	61	66	73	85	90	102	105	111	131	160	172	193	208	234	251	263
		66	30	35	44	51	58	67	73	75	87	93	104	106	122	145	164	176	190	208	233	240
		72	29	34	42	47	54	60	69	76	78	89	94	102	116	133	144	160	187	200	215	233
		78	28	34	40	47	50	58	63	71	78	83	90	96	109	119	139	151	179	190	201	208
		84	29	35	39	44	51	57	65	69	72	80	85	94	103	114	129	143	171	179	192	202
	9N@ 7.78	56	37	45	56	67	75	88	102	110	122	128	154	168	180	203	229	249	283			
		60	35	45	54	65	73	89	99	105	114	129	131	159	165	189	218	247	262	279		
		66	38	48	56	67	74	86	92	106	112	122	127	149	160	178	211	227	254	264	297	
		72	37	45	56	64	69	77	89	100	108	114	124	131	145	163	198	211	235	257	285	295
		78	36	45	53	60	66	76	87	93	102	110	116	118	140	153	183	201	225	250	267	282
		84	35	45	50	59	67	72	81	94	95	103	113	118	128	148	176	192	217	226	248	271
	10N@ 7.00	56	38	53	60	75	88	100	106	118	137	161	168	180	192	233	251	264				
		60	41	55	65	71	88	102	109	122	130	157	161	175	184	208	240	254	287			
		66	42	51	62	70	85	91	105	109	123	132	157	161	173	195	228	243	278	287		
		72	38	47	59	66	78	88	94	106	112	127	133	155	162	181	218	233	262	277		
		78	37	46	55	65	71	79	94	96	108	115	130	137	151	176	203	227	247	262	290	
		84	36	47	55	63	72	80	92	98	109	112	121	133	144	167	194	207	228	255	282	298
	11N@ 6.36	56	45	60	71	87	102	108	127	138	162	178	185	204	218	249	282					
		60	44	57	66	85	90	104	114	129	157	162	180	189	207	236	262	271				
		66	43	53	67	76	88	105	106	117	132	160	166	176	181	212	244	259	305			
		72	42	55	62	70	82	94	108	109	119	136	148	167	176	203	233	251	295	302		
		78	40	50	61	73	80	92	98	110	118	124	140	141	169	192	226	242	273	284	310	
		84	39	49	59	68	78	84	97	102	116	124	129	144	154	185	209	228	262	278	304	
	12N@ 5.83	56	50	63	76	88	103	113	129	157	170	181	194	207	234	253	293					
		60	46	58	74	89	103	112	128	139	161	179	183	196	207	248	284					
		66	45	55	67	78	92	105	115	130	143	164	175	186	199	241	267	279	308			
		72	42	55	65	77	89	102	107	119	135	148	168	173	189	215	247	264	298			
		78	42	51	64	72	84	97	106	113	123	141	151	167	179	201	229	256	279	308		
		84	40	51	61	73	83	89	102	115	118	128	144	151	171	192	221	249	274	298	314	
	14N@ 5.00	56	53	71	87	102	120	137	163	180	191	207	227	247	259	287						
		60	54	69	88	99	112	128	153	171	182	196	210	230	251	282						
		66	48	64	77	92	106	115	132	164	176	186	200	219	241	271	287					
		72	49	61	73	91	103	110	120	138	169	181	191	213	216	248	277					
		78	44	58	72	84	97	111	120	138	141	172	182	194	204	226	270	272				
		84	44	58	69	79	97	106	116	127	143	155	171	177	196	202	259	262	315			

STANDARD WEIGHTS
JOIST GIRDERS

GIRDER SPAN (ft)	JOIST SPACES (ft)	GIRDER DEPTH (in)	JOIST GIRDER WEIGHT -- POUNDS PER LINEAR FOOT																				
			LOAD ON EACH PANEL POINT -- KIPS															ASD		LRFD		
			6	8	10	12	14	16	18	20	22	24	26	28	30	35	40	45	50	55	60	65
			9	12	15	18	21	24	27	30	33	36	39	42	45	52.5	60	67.5	75	82.5	90	97.5
75	8N@ 9.38	56	40	49	61	73	82	95	115	116	128	140	152	156	166	186	219	245	261	275		
		60	38	48	58	70	80	92	97	116	118	130	142	153	158	177	206	234	251	263	280	
		66	35	44	53	64	72	82	98	99	118	120	132	144	152	169	186	207	234	244	269	289
		72	34	43	52	61	71	79	87	100	101	121	122	134	141	158	178	189	213	237	253	267
		78	34	43	54	61	69	77	81	89	103	105	123	125	131	150	168	183	207	218	246	261
	10N@ 7.50	60	42	59	69	83	98	117	129	131	154	159	170	182	194	234	247	277				
		66	42	55	69	78	87	100	119	132	134	153	163	174	184	207	241	265	292			
		72	42	54	63	73	86	101	111	123	136	138	154	163	176	194	228	256	280	289		
		78	39	48	63	74	82	91	105	114	127	139	152	157	165	177	221	237	261	278		
		84	39	49	59	69	78	94	95	110	128	131	143	156	150	166	197	225	247	267	293	
	12N@ 6.25	60	51	68	84	98	118	131	144	159	181	183	195	206	236	265						
		66	50	62	79	90	110	122	135	148	164	172	185	198	209	249	277					
		72	46	63	73	90	104	124	126	141	154	166	170	188	199	234	259	275				
		78	47	61	76	86	98	105	126	139	152	163	166	178	188	208	250	265	301			
		84	46	56	70	79	92	106	126	139	141	164	171	171	175	191	235	253	279	288		
	14N@ 5.36	66	56	72	89	111	125	137	160	171	184	199	209	232	241	270						
		72	52	70	84	101	121	134	148	166	179	190	202	221	233	260	297					
		78	53	68	80	98	107	125	139	151	174	183	192	215	225	249	277					
		84	52	64	79	92	108	127	130	153	171	179	186	196	204	227	271	284				
		90	50	66	77	94	110	119	142	144	173	176	178	179	197	203	260	275				
	15N@ 5.00	66	60	77	98	118	132	146	164	185	196	215	226	244	268	273						
		72	59	74	87	110	123	146	160	169	189	201	222	221	248	264	312					
		78	54	73	88	104	124	139	152	169	177	195	207	213	228	257	308					
		84	55	67	86	93	116	131	143	171	174	189	193	206	219	250	287	302				
		90	52	69	81	95	118	133	145	146	177	179	182	202	212	246	280	294				
80	8N@ 10.00	60	37	45	56	64	75	88	97	103	112	127	137	156	162	189	208	234	261	277		
		66	35	45	52	62	70	77	90	103	105	113	129	131	155	176	197	226	243	258	287	
		72	33	41	48	59	68	76	87	92	106	108	116	126	141	170	187	203	235	250	268	288
		78	33	41	47	56	64	73	81	88	94	109	111	118	136	156	178	195	216	238	255	269
		84	35	39	48	56	63	71	79	83	96	98	112	114	129	146	173	184	210	216	247	256
		90	56	57	58	63	70	79	79	90	95	103	105	118	127	134	169	179	205	210	243	252
	10N@ 8.00	60	41	53	68	76	97	103	112	129	139	159	180	191	195	234	255	267				
		66	39	52	62	75	90	100	107	115	132	154	167	178	187	210	245	257				
		72	43	55	63	74	87	97	106	120	127	151	161	171	182	195	238	252				
		78	42	51	63	71	86	90	100	112	122	130	155	166	176	187	229	245	281	290		
		84	42	51	61	70	78	91	100	109	115	125	131	157	166	178	222	230	256	277		
		90	40	49	60	68	77	87	92	102	111	118	132	136	160	169	197	221	239	261	293	
	12N@ 6.67	66	50	65	73	90	103	115	130	161	172	180	195	207	220	254	290					
		72	47	59	72	86	101	107	125	133	165	174	183	196	210	243	273					
		78	46	60	69	80	94	108	114	129	136	167	176	189	197	220	263	276				
		84	47	56	70	79	92	99	111	121	138	140	170	175	193	207	250	265	301			
		90	44	56	66	74	86	101	113	116	125	143	149	170	177	193	242	259	281	301		
		96	43	54	68	75	85	98	104	117	120	130	147	156	180	195	233	251	277	295	308	
	14N@ 5.71	66	57	73	89	103	113	129	160	182	186	207	221	231	262	288						
		72	54	67	79	101	106	125	143	165	184	198	211	224	243	277						
		78	50	66	78	95	109	118	136	149	173	191	197	216	226	266	297					
		84	50	64	74	92	99	112	124	143	169	177	191	203	218	250	276					
		90	48	61	74	86	100	115	121	136	146	172	181	195	208	227	264	275				
		96	47	61	74	84	100	108	118	127	145	152	177	181	201	215	258	266				
	16N@ 5.00	66	62	78	101	113	130	161	184	197	212	233	253	268	288	308						
		72	57	76	93	109	118	145	167	187	203	218	246	258	270	291						
		78	58	73	91	104	120	137	149	181	191	208	219	242	252	282						
		84	54	69	84	100	115	126	143	174	185	195	211	223	250	271	315					
		90	54	70	80	101	114	119	144	155	180	191	207	220	233	267	306					
		96	55	68	81	94	110	121	133	155	164	186	201	211	226	264	298	302				

GIRDER SPAN (ft)	JOIST SPACES (ft)	GIRDER DEPTH (in)	JOIST GIRDER WEIGHT -- POUNDS PER LINEAR FOOT																			
			LOAD ON EACH PANEL POINT -- KIPS														ASD		LRFD			
			6	8	10	12	14	16	18	20	22	24	26	28	30	35	40	45	50	55	60	65
			9	12	15	18	21	24	27	30	33	36	39	42	45	52.5	60	67.5	75	82.5	90	97.5
90	9N@ 10.00	72	46	55	64	81	92	98	117	119	141	143	159	160	182	202	233	238	287			
		84	48	50	60	75	84	88	102	121	124	135	148	154	165	180	218	228	254	286	298	
		90	56	57	62	72	85	88	99	105	125	128	138	152	159	174	211	218	251	272	294	
		96	57	58	64	69	80	91	98	107	110	128	131	142	155	170	199	208	246	263	290	302
		102	57	59	62	69	75	87	95	105	112	130	133	134	146	167	191	196	241	257	281	296
	10N@ 9.00	72	48	61	72	85	99	118	130	142	155	160	170	182	186	236	248	255				
		84	49	58	69	81	97	115	117	137	148	153	165	173	177	210	240	252	292	307		
		90	50	56	66	79	89	100	107	126	129	141	157	167	176	186	232	248	283	292		
		96	48	56	66	74	87	95	108	113	129	133	153	159	168	173	217	223	259	268		
		102	48	57	65	76	84	97	105	115	124	131	137	155	162	170	200	222	245	257	288	
	11N@ 8.18	72	51	65	78	99	119	120	143	150	172	182	188	208	219	240	273					
		84	50	62	74	87	100	113	126	138	150	166	177	192	194	215	258	288				
		90	51	59	72	85	93	107	128	129	142	158	170	182	188	204	250	272	291			
		96	53	60	71	81	95	105	113	132	134	148	167	174	183	194	242	266	296	310		
		102	57	61	70	82	94	101	116	124	138	150	163	167	177	191	235	254	278	292		
	12N@ 7.50	78	53	68	79	102	111	124	149	162	172	183	193	210	225	258	276					
		84	52	65	79	91	105	125	137	149	166	176	188	195	213	245	270	277				
		90	52	68	79	89	106	126	128	151	152	169	182	190	205	219	262	269				
		96	52	63	76	90	103	110	129	132	153	156	175	185	198	210	252	265	293			
		108	55	64	76	85	97	107	115	135	137	160	168	179	183	198	237	261	290	295		
	15N@ 6.00	78	66	82	99	121	145	148	179	188	201	216	237	252	270							
		84	62	76	97	122	125	149	169	183	192	204	220	247	252	296						
		90	60	78	90	106	127	140	153	178	183	200	213	221	249	284	308					
		96	58	72	93	108	129	131	154	173	176	196	198	218	226	272	300					
		108	59	72	87	101	115	136	139	168	172	183	186	206	218	263	275	299				
	18N@ 5.00	78	74	99	120	145	159	177	198	215	238	253	270	292								
		84	73	89	113	137	151	169	192	207	216	244	260	272	298							
		90	70	90	106	129	153	166	185	198	212	228	250	267	280							
		96	68	87	108	131	144	158	179	192	204	220	235	260	275	291						
		108	64	85	103	120	139	151	172	189	192	216	231	243	263	276						
100	10N@ 10.00	78	52	58	68	79	92	106	115	131	140	161	182	190	201	236	257	278				
		84	53	58	69	77	93	102	109	118	133	156	165	185	194	210	249	262	294			
		96	56	62	68	84	87	102	108	125	126	150	162	179	186	202	241	252	282			
		102	57	61	66	77	89	100	106	121	127	133	159	169	182	191	234	242	277			
		108	58	61	67	76	87	92	106	107	127	130	154	162	174	176	218	224	261	275		
	12N@ 8.33	78	56	70	86	97	112	124	158	173	182	188	209	222	241	254						
		84	55	68	84	98	107	126	133	163	176	185	191	211	224	243	287					
		96	55	66	75	91	102	111	116	131	158	179	184	196	209	232	270	286				
		102	55	62	73	90	95	113	118	133	141	174	179	191	204	222	257	272				
		108	55	62	72	85	97	106	117	123	139	149	175	186	199	200	248	260	299			
	15N@ 6.67	78	67	86	104	115	133	172	184	207	213	236	261	276	296							
		84	61	78	94	113	128	164	175	188	211	223	241	267	281							
		96	61	72	93	105	118	133	170	179	194	219	224	238	252	286						
		102	60	74	85	102	117	125	144	175	187	201	209	234	241	272	312					
		108	59	73	87	103	118	123	140	149	179	200	204	230	238	261	303					
	16N@ 6.25	84	69	80	106	117	133	164	188	202	214	237	257	268	293							
		96	63	75	98	115	124	140	173	195	200	220	239	245	268	302						
		102	62	74	97	111	118	136	154	178	196	210	224	237	252	292						
		108	62	76	87	104	118	129	148	173	192	202	216	230	246	280						
		120	64	76	86	104	116	128	140	161	188	190	211	219	243	270	303	309				
	17N@ 5.88	84	70	88	107	127	145	168	189	213	237	245	266	294	302							
		96	65	80	99	115	135	151	182	194	211	234	250	268	277	302						
		102	66	79	98	118	127	144	175	187	204	224	242	255	268	300						
		108	65	78	91	107	120	140	160	181	203	218	235	240	261	286						
		120	67	78	93	110	125	133	149	168	189	212	216	235	248	274						
	18N@ 5.56	84	70	94	109	134	164	187	203	215	238	261	282	292								
		96	65	84	100	120	140	172	195	208	221	247	268	276	293							
		102	66	84	102	118	137	154	189	201	215	230	253	269	284							
		108	68	82	104	119	130	148	182	195	206	224	244	263	268	285						
		120	69	84	98	113	129	142	163	192	197	219	236	251	265	278						
	20N@ 5.00	84	77	103	118	146	178	201	219	240	264	295										
		96	73	99	115	125	153	188	212	225	252	269	284	307								
		102	71	89	114	129	147	181	204	219	238	261	278	299	314							
		108	71	89	110	126	149	164	202	211	230	252	270	291	298							
		120	71	89	102	120	133	164	200	205	222	240	262	269	289	314						

STANDARD WEIGHTS
JOIST GIRDERS

GIRDER SPAN (ft)	JOIST SPACES (ft)	GIRDER DEPTH (in)	JOIST GIRDER WEIGHT -- POUNDS PER LINEAR FOOT LOAD ON EACH PANEL POINT -- KIPS															ASD		LRFD		
			6	8	10	12	14	16	18	20	22	24	26	28	30	35	40	45	50	55	60	65
			9	12	15	18	21	24	27	30	33	36	39	42	45	52.5	60	67.5	75	82.5	90	97.5
110	10N@ 11.00	84	61	69	82	94	100	120	143	144	160	172	184	188	209	236	266	271				
		96	63	69	81	91	98	107	125	142	154	166	181	184	201	208	261	264	297			
		108	64	69	75	86	95	105	113	131	133	160	171	181	185	190	248	252	288			
		114	67	72	76	86	96	108	115	133	136	154	158	173	182	188	238	242	280			
		120	66	72	76	83	90	100	111	128	137	140	157	166	176	177	230	238	274	278		
	12N@ 9.17	84	66	74	88	109	122	144	162	175	186	199	218	224	250	255						
		96	66	74	88	101	125	127	151	170	179	187	194	214	224	248	280					
		108	68	75	84	95	111	132	136	159	168	174	190	197	209	230	276	284				
		114	66	75	84	102	107	126	134	156	158	170	186	193	201	226	271	275				
		120	67	74	82	96	109	126	135	158	161	168	179	188	192	202	252	260	299			
	14N@ 7.86	84	71	84	102	123	147	160	182	186	208	222	244	271	274							
		96	69	83	100	124	136	150	165	178	191	213	223	236	257	264						
		108	69	78	99	108	128	142	155	174	186	197	210	220	239	260	304					
		114	69	79	93	105	124	133	157	167	182	194	202	212	230	257	298					
		120	69	80	90	106	126	135	158	160	179	189	198	204	226	234	294	310				
	16N@ 6.88	96	72	89	106	126	149	168	182	196	217	231	250	271	287							
		102	74	89	108	127	152	156	178	195	212	220	242	262	278							
		108	73	83	104	127	142	158	175	188	206	213	234	249	261	292						
		114	74	86	105	114	135	161	162	186	200	209	226	242	256	282						
		120	75	88	99	117	138	152	165	183	184	205	210	237	252	270						
	18N@ 6.11	96	77	99	125	148	167	190	208	215	240	257	284	297								
		102	80	101	127	139	153	182	204	210	232	247	273	290	299							
		108	77	94	111	131	157	174	198	207	224	241	264	279	293							
		114	79	97	113	134	159	163	192	204	218	238	258	272	285							
		120	79	91	110	136	152	166	185	197	209	235	241	266	272	288						
	20N@ 5.50	96	82	106	139	154	185	206	219	242	260	288	300									
		102	81	109	130	154	173	198	212	236	253	279	295	312								
		108	83	106	132	145	169	192	210	229	246	273	285	308								
		114	86	101	134	147	161	185	208	224	238	263	280	304								
		120	77	93	113	128	154	167	193	215	230	248	271	297	302							
120	10N@ 12.00	96	69	76	82	89	94	112	138	152	168	178	189	199	208	242	263	286				
		102	69	75	83	86	92	110	134	148	164	174	186	196	207	219	262	274				
		108	82	83	86	95	100	108	126	145	161	170	184	194	205	214	258	268				
		114	82	83	86	90	95	109	127	140	158	166	179	185	197	206	254	262				
		120	83	84	86	92	97	102	113	133	153	155	174	177	188	200	245	254	260			
	12N@ 10.00	96	71	82	90	100	125	130	168	177	188	198	220	238	254	296						
		102	72	80	88	101	116	130	156	167	184	190	203	223	240	282						
		108	72	81	90	99	105	128	134	159	181	188	196	214	226	268	298					
		114	71	82	87	95	106	121	135	155	168	187	188	208	218	252	286					
		120	72	80	88	93	107	123	133	138	163	185	187	201	211	226	269	276				
	15N@ 8.00	96	77	90	109	125	134	178	189	202	222	238	252	279	296							
		102	78	88	103	118	132	169	179	198	216	231	245	261	284							
		108	80	90	101	115	133	160	178	195	209	224	237	252	276							
		114	78	88	98	117	122	137	176	186	201	212	234	241	269	282						
		120	78	89	99	110	124	140	167	180	189	204	230	238	247	275						
	16N@ 7.50	96	80	90	109	128	163	175	192	213	238	249	268	283								
		102	78	92	110	120	137	172	191	206	228	240	262	282	296							
		108	80	90	100	120	133	168	184	199	220	231	246	269	287							
		114	81	91	101	117	135	145	180	197	202	228	238	255	281	288						
		120	79	90	99	118	126	147	177	190	199	225	228	245	265	278						
	18N@ 6.67	96	85	95	116	136	178	198	214	237	252	279	295									
		102	83	97	113	138	174	192	209	229	243	266	288									
		108	84	94	115	129	170	188	204	221	233	256	273	306								
		114	85	96	116	123	143	183	199	212	230	249	264	294	304							
		120	84	95	105	125	140	179	192	204	227	243	258	282	295							
	20N@ 6.00	96	89	110	130	166	189	213	237	254	280	296										
		102	87	105	123	150	182	209	230	245	269	288										
		108	88	101	121	142	174	205	223	239	255	284	302									
		114	87	103	119	138	176	201	215	230	254	281	295	309								
		120	90	102	121	133	150	186	208	223	242	263	288	305	310							
	24N@ 5.00	96	96	121	168	192	220	244	271	312												
		102	99	118	151	186	212	238	266	303												
		108	96	119	147	181	204	229	257	286	312											
		114	109	141	152	172	202	224	246	278	305											
		120	107	143	152	165	200	221	238	272	301											

GLOSSARY

Accessories. Structural components related to the design, fabrication and erection of *joists* and *Joist Girders* including, but not limited to sloped *end bearings*, *extended ends*, *ceiling extensions*, *bridging* and bridging anchors, *headers* and bottom chord lateral bracing for *Joist Girders*.

ASD (Allowable Strength Design). Method of proportioning structural components such that the *allowable strength* equals or exceeds the *required strength* of the component under the action of the *ASD load combinations*.

ASD Load Combination. *Load* combination in the *applicable building code* intended for allowable *strength design* (allowable stress design).

Allowable Strength*. *Nominal strength* divided by the *safety factor*, R_{Ω}.

Applicable Building Code. Building code under which the structure is designed.

Available Strength*. *Design strength* or *allowable strength* as appropriate.

Bay. The distance between the main structural frames or walls of a building.

Bearing. The distance that the bearing shoe or seat of a *joist* or *Joist Girder* extends over its masonry, concrete or steel support.

Bearing Plate. The steel plate used for a *joist* or *Joist Girder* to bear on when it is supported by masonry or concrete supports. The plate is designed by the *Specifying Professional* to carry the *joist* reaction to the supporting structure.

Bottom Chord Extension (BCX). The two angle extended part of a *joist* bottom chord from the first bottom chord panel point towards the end of the joist.

Bridging. In general, a member connected to a joist to brace it from lateral movement. See also Diagonal Bridging and Horizontal Bridging

Buckling. *Limit state* of sudden change in the geometry of a structure or any of its elements under a critical loading condition.

Buckling Strength. *Nominal strength* for *buckling* or instability *limit states*.

Buyer. The entity that has agreed to purchase *material* from the manufacturer and has also agreed to the terms of sale.

Camber. An upward curvature of the chords of a *joist* or *Joist Girder* induced during shop fabrication. Note, this is in addition to the pitch of the top chord.

Ceiling Extension. A *bottom chord extension* except that only one angle of the *joist* bottom chord is extended from the first bottom chord panel point towards the end of the joist.

Chords. The top and bottom members of a *joist* or *Joist Girder*. When a chord is comprised of two angles there is usually a gap between the members.

Clear Span. The actual clear distance or opening between supports for a *joist*, that is the distance between walls or the distance between the edges of flanges of beams.

Cold-Formed Steel Structural Member. Shape manufactured by press-braking blanks sheared from sheets, cut lengths of coils or plates, or by roll forming cold- or hot-rolled coils or sheets; both forming operations being performed at ambient room temperature, that is, without manifest addition of heat such as would be required for hot forming.

Collateral Load. All additional dead loads other than the weight of the building, such as sprinklers, pipes, ceilings, and mechanical or electrical components.

Connection. Combination of structural elements and *joints* used to transmit forces between two or more members. See also Splice.

Deck. A floor or roof covering made out of gage metal attached by welding or mechanical means to *joists*, beams, *purlins*, or other structural members and can be galvanized, painted, or unpainted.

Design Load. Applied *load* determined in accordance with either *LRFD load combinations* or *ASD load combinations*, whichever is applicable.

Design Strength*. *Resistance factor* multiplied by the *nominal strength*, R_ϕ.

Diagonal Bridging. Two angles or other structural shapes connected from the top chord of one *joist* to the bottom chord of the next joist to form an 'X' shape. These members are almost always connected at their point of intersection.

Diaphragm. Roof, floor or other membrane or bracing system that transfers in-plane forces to the lateral force resisting system.

Effective Length. Length of an otherwise identical column with the same strength when analyzed with pin-ended boundary conditions.

Elastic Analysis. *Structural analysis* based on the assumption that the structure returns to its original geometry on removal of the *load*.

End Diagonal or Web. The first web member on either end of a *joist* or *Joist Girder* which begins at the top chord at the seat and ends at the first bottom chord panel point.

Erector. The entity that is responsible for the safe and proper erection of the *materials* in accordance with all applicable codes and regulations.

Extended End. The extended part of a *joist* top chord with the seat angles also being extended from the end of the joist extension back into the joist and maintaining the standard end *bearing* depth over the entire length of the extension.

Factored Load. Product of a *load factor* and the *nominal load*.

Filler. A rod, plate or angle welded between a two angle web member or between a top or bottom chord panel to tie them together, usually located at the middle of the member.

Flexural Buckling. Buckling mode in which a compression member deflects laterally without twist or change in cross-sectional shape.

Flexural-Torsional Buckling. Buckling mode in which a compression member bends and twists simultaneously without change in cross-sectional shape.

Girt. Horizontal structural member that supports wall panels and is primarily subjected to bending under horizontal loads, such as wind load.

Gravity Load. *Load*, such as that produced by dead and live loads, acting in the downward direction.

Header. A structural member located between two *joists* or between a joist and a wall which carries another joist or joists. It is usually made up of an angle, channel, or beam with saddle angle connections on each end for bearing.

Horizontal Bridging*. A continuous angle or other structural shape connected to the top and bottom chord of a joist.

Inelastic Analysis. *Structural analysis* that takes into account inelastic material behavior, including plastic analysis.

Instability. *Limit state* reached in the loading of a *structural component*, frame or structure in which a slight disturbance in the *loads* or geometry produces large displacements.

Joint. Area where two or more ends, surfaces or edges are attached. Categorized by type of fastener or weld used and the method of force transfer.

Joist. A structural load-carrying member with an open web system which supports floors and roofs utilizing hot-rolled or cold-formed steel and is designed as a simple span member. Currently, the SJI has the following joist designations: K-Series including KCS, LH-Series and DLH-Series, and CJ-Series.

Joist Girder. A primary structural load-carrying member with an open web system designed as a simple span supporting equally spaced concentrated loads of a floor or roof system acting at the panel points of the member and utilizing hot-rolled or cold-formed steel.

Joist Substitute. A structural member who's intended use is for very short spans (10 feet or less) where open web steel joists are impractical. They are usually used for short spans in skewed bays, over corridors or for outriggers. It can be made up of two or four angles to form channel sections or box sections.

Lateral Buckling. Buckling mode of a flexural member involving deflection normal to the plane of bending.

Lateral-Torsional Buckling. Buckling mode of a flexural member involving deflection normal to the plane of bending occurring simultaneously with twist about the shear center of the cross section.

Limit State. Condition in which a structure or component becomes unfit for service and is judged either to be no longer useful for its intended function (*serviceability limit state*) or to have reached its ultimate load-carrying capacity (*strength limit state*).

Load. Force or other action that results from the weight of building materials, occupants and their possessions, environmental effects, differential movement, or restrained dimensional changes.

Load Effect. Forces, stresses, and deformations produced in a *structural component* by the applied *loads*.

Load Factor. Factor that accounts for deviations of the *nominal load* from the actual *load*, for uncertainties in the analysis that transforms the *load* into a *load effect*, and for the probability that more than one extreme *load* will occur simultaneously.

Local Buckling.** *Limit state* of *buckling* of a compression element within a cross section.

LRFD (Load and Resistance Factor Design). Method of proportioning *structural components* such that the *design strength* equals or exceeds the *required strength* of the component under the action of the *LRFD load combinations*.

LRFD Load Combination. *Load* combination in the *applicable building code* intended for strength design (*Load and Resistance Factor Design*).

Material. *Joists*, *Joist Girders* and *accessories* as provided by the *Seller*.

GLOSSARY

Nailers. Strips of lumber attached to the top chord of a *joist* so plywood or other flooring can be nailed directly to the *joist*.

Nominal Load. Magnitude of the *load* specified by the *applicable building code*.

Nominal Strength*. Strength of a structure or component (without the *resistance factor* or *safety factor* applied) to resist the *load effects*, as determined in accordance with these *Standard Specifications*.

Owner. The entity that is identified as such in the Contract Documents.

Permanent Load. *Load* in which variations over time are rare or of small magnitude. All other *loads* are *variable loads*.

Placement Plans. Drawings that are prepared depicting the interpretation of the Contract Documents requirements for the *material* to be supplied by the *Seller*. These floor and/or roof plans are approved by the *Specifying Professional*, *Buyer* or *Owner* for conformance with the design requirements. The *Seller* uses the information contained on these drawings for final material design. A unique piece mark number is typically shown for the individual placement of *joists*, *Joist Girders* and *accessories* along with sections that describe the *end bearing* conditions and minimum attachment required so that *material* is placed in the proper location in the field.

Ponding. Retention of water at low or irregular areas on a roof due solely to the deflection of flat roof framing.

Purlin. Horizontal structural member that supports roof deck and is primarily subjected to bending under vertical loads such as dead, snow or wind loads.

Quality Assurance. System of shop and field activities and controls implemented by the *owner* or his/her designated representative to provide confidence to the *owner* and the building authority that quality requirements are implemented.

Quality Control. System of shop and field controls implemented by the *seller* and *erector* to ensure that contract and company fabrication and erection requirements are met.

Required Strength*. Forces, stress, and deformations produced in a *structural component*, determined by either *structural analysis*, for the *LRFD* or *ASD load combinations*, as appropriate, or as specified by these *Standard Specifications*.

Resistance Factor, ϕ**.** Factor that accounts for unavoidable deviations of the *nominal strength* from the actual strength and for the manner and consequences of failure.

Safety Factor, Ω**.** Factor that accounts for deviations of the actual strength from the *nominal strength*, deviations of the actual *load* from the *nominal load*, uncertainties in the analysis that transforms the *load* into a *load effect* and for the manner and consequences of failure.

Seller. A company certified by the Joist Institute engaged in the manufacture and distribution of *joists*, *Joist Girders* and *accessories*.

Service Load. *Load* under which serviceability limit states are evaluated.

Serviceability Limit State. Limiting condition affecting the ability of a structure to preserve its appearance, maintainability, durability, or the comfort of its occupants or function of machinery, under normal usage.

Slenderness Ratio. The ratio of the effective length of a column to the radius of gyration of the column about the same axis of bending.

Span. The centerline-to-centerline distance between structural steel supports such as a beam, column or *Joist Girder* or the *clear span* distance plus four inches onto a masonry or concrete wall.

Specified Minimum Yield Stress. Lower limit of *yield stress* specified for a material as defined by ASTM.

Specifying Professional. The licensed professional who is responsible for sealing the building Contract Documents, which indicates that he or she has performed or supervised the analysis, design and document preparation for the structure and has knowledge of the load-carrying structural system.

Splice. *Connection* between two structural members joined at their ends by either bolting or welding to form a single, longer member.

Stability. Condition reached in the loading of a *structural component*, frame or structure in which a slight disturbance in the *loads* or geometry does not produce large displacements.

Stabilizer Plate. A steel plate at a column or wall inserted between the end of a bottom *chord* of a *joist* or *Joist Girder*.

Standard Specifications. Documents developed and maintained by the Steel Joist Institute for the design and manufacture of open web steel joists and Joist Girders. The term "SJI Standard Specifications" encompass by reference the following:

ANSI SJI 100 - 2020 Standard Specification for K-Series, LH-Series and DLH-Series Open Web Steel Joists and for Joist Girders
ANSI SJI 200 - 2020 Standard Specifications for Composite Steel Joists.

Strength Limit State. Limiting condition affecting the safety of the structure, in which the ultimate load-carrying capacity is reached.

Structural Analysis. Determination of *load effects* on members and connections based on principles of structural mechanics.

Structural Drawings. The graphic or pictorial portions of the Contract Documents showing the design, location and dimensions of the work. These documents generally include plans, elevations, sections, details, connections, all loads, schedules, diagrams and notes.

Tagged End. The end of a *joist* or *Joist Girder* where an identification or piece mark is shown by a metal tag. The member must be erected with this tagged end in the same position as the tagged end noted on the *placement plan*.

Tensile Strength (of material). Maximum tensile stress that a material is capable of sustaining as defined by ASTM.

Tie Joist. A *joist* that is bolted at a column.

Top Chord Extension (TCX). The extended part of a *joist* top chord. This type of extension only has the two top chord angles extended past the joist seat.

Torsional Buckling. *Buckling* mode in which a compression member twists about its shear center axis.

Unbraced Length. Distance between braced points of a member, measured between the centers of gravity of the bracing members.

Variable Load. *Load* not classified as *permanent load*.

Webs. The vertical or diagonal members joined at the top and bottom *chords* of a *joist* or *Joist Girder* to form triangular patterns.

Yield Point. First stress in a material at which an increase in strain occurs without an increase in stress as defined by ASTM.

Yield Strength. Stress at which a material exhibits a specified limiting deviation from the proportionality of stress to strain as defined by ASTM.

Yield Stress. Generic term to denote either *yield point* or *yield strength*, as appropriate for the material.

NOTES:

* These terms are usually qualified by the type of *load effect*, e.g., nominal tensile strength, available compressive strength, design flexural strength.

** Term usually qualified by the type of component, e.g. local web buckling, local flange buckling, etc.

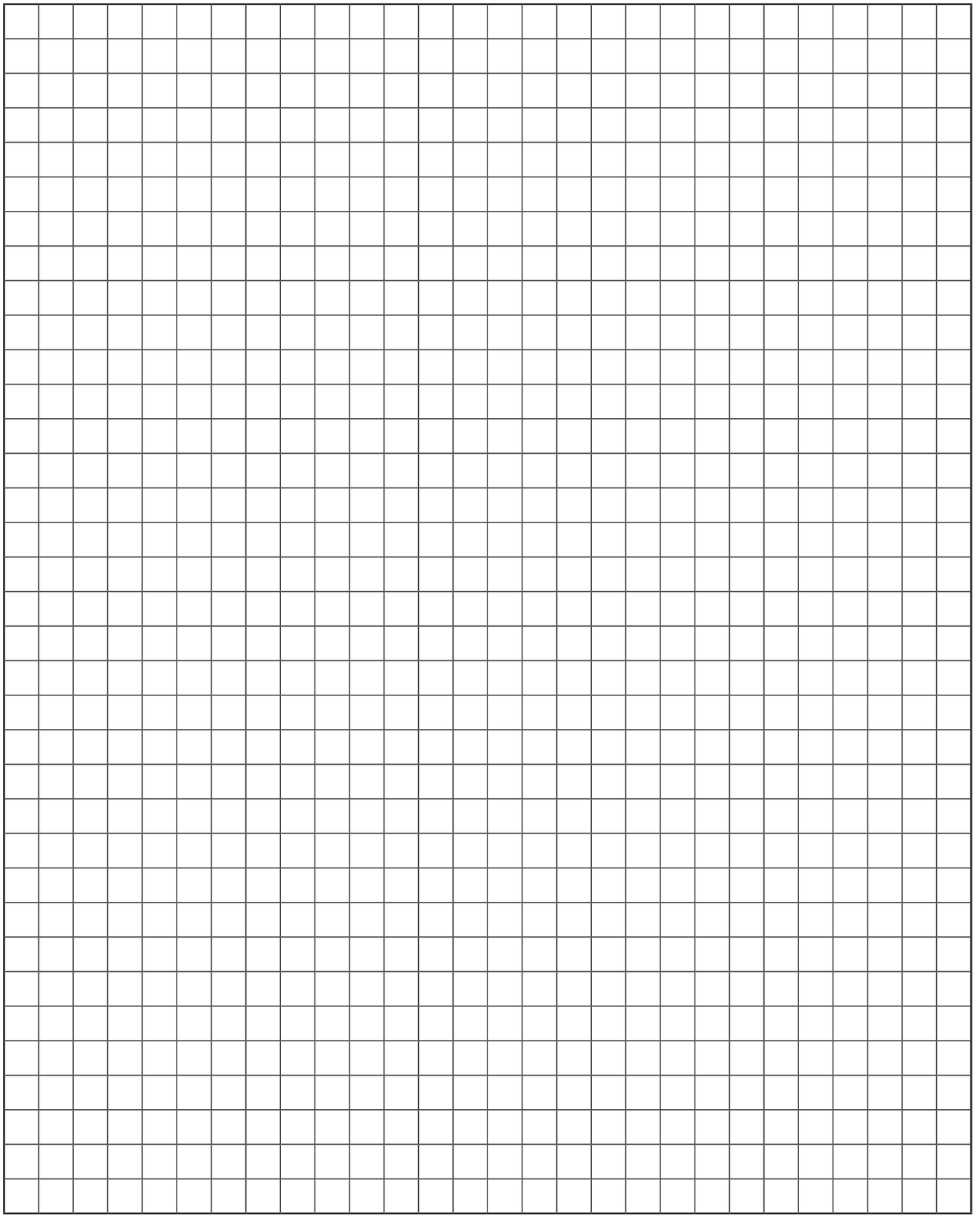

APPENDIX A

FIRE-RESISTANCE RATINGS WITH STEEL JOISTS

The Underwriters Laboratories (U.L.) Fire Resistance Directory lists hundreds of assemblies and their fire resistance ratings. The Specifying Professional can choose between numerous Floor-Ceiling and Roof-Ceiling assemblies that include steel joists and Joist Girders.

As a convenience, a selected number of assemblies are listed on the following pages. In addition, the Steel Joist Institute's Technical Digest #10 "Design of Fire Resistive Assemblies with Steel Joists" has a complete listing of steel joist assemblies and additional information about fire ratings. However, the listing that follows and the Technical Digest are intended as a guide only, and the Specifying Professional must refer to the current U.L. Fire Resistance Directory for complete design requirements.

Hundreds of fire tests on steel joist-supported assemblies have been conducted at nationally recognized testing laboratories in accordance with ASTM Standard E119, ANSI A2.1/UL 263, and NFPA 251. Because of practical loading restrictions and limitations of furnace dimensions, the vast majority of these tests were run using lightweight joists – normally from 8 inches to 14 inches (203 mm to 356 mm) deep. This practice was advantageous in that it established the *minimum* acceptable joists at the shallow and lightweight end of the joist load tables. This also resulted in a specified minimum joist designation being listed in the U.L. Fire Resistance Assembly, which is the joist that combines the required minimum depth and minimum weight per foot. Joists of the same series which equal or exceed the specified minimum joist depth and joist weight per foot may be used provided the accessories are compatible. The dimension from the bottom chord of the joists to the ceiling, whether given or calculated, is a minimum.

Where a U.L. Fire Resistance Assembly is being utilized, the Specifying Professional shall indicate the assembly number being used on the structural contract drawings. In addition, the Specifying Professional shall consider the following, as applicable:

- Joist designations specified on the structural contract drawings shall not be less than the minimum size for that assembly. The assembly may also require a minimum bridging size that may be larger than required by the SJI Specifications for the particular designation and joist spacing.
- Some assemblies stipulate minimum size materials or minimum cross sectional areas for individual joist and Joist Girder components. It is the responsibility of the Specifying Professional to show all special requirements on the contract drawings.
- Note that the maximum joist spacing shown for Floor-Ceiling Assemblies may be increased from the spacing listed in the U.L. Fire Resistance Directory to a maximum of 48 inches on center, provided the floor slab meets the structural requirements and the spacing of hanger wires supporting the ceiling is not increased.
- Some assemblies stipulate an allowable maximum joist design stress level less than the 30 ksi (207 MPa) used in the joist and Joist Girder specifications. It is the responsibility of the Specifying Professional to apply the proper stress level reductions (when applicable) when selecting joists and/or Joist Girders. This is accomplished by prorating the joist and/or Joist Girder capacities. To adjust the stress level of joists or Joist Girders, multiply the design load by the ratio of the joist design stress to the required maximum [e.g. 30/26 (207/179), 30/24 (207/165), 30/22 (207/152)], and then using this increased load, select a joist or Joist Girder from the load and/or weight tables.

- Some U.L. Roof-Ceiling Assemblies using direct applied protection limit the spacing of the joists for certain types and gages of metal decking – refer to the U.L. Fire Resistance Directory for this information.
- Where fire protective materials are to be applied directly to the steel joists or Joist Girders, it is often desired to have the joist furnished as unpainted. The Specifying Professional should indicate on the structural contract drawings if the joists or Joist Girders are to be painted or not.
- Certain older U.L. fire rated assemblies may refer to joist series that predate the K-series joists. Where one of these assemblies is selected, refer to the U.L Fire Resistance Directory for special provisions for substituting a K-Series joist in lieu of an S-, J-, and/or H-Series joist.

APPENDIX A

FLOOR - CEILING ASSEMBLIES WITH MEMBRANE PROTECTION

Restrained Assembly Rating	Protection Material	Minimum Joist Size	Concrete		Maximum Joist Spacing (in.)	Minimum Primary Support Member	UL Design Number
			Minimum Thickness (in.)	Type			
1 Hr.	Acoustical	12K1, 18LH02	2.5	LW, NW	NL	20G@13plf W8 x 15	D216 D219
	Exposed Grid	10K1	2.5	NW	48*	20G@14plf W6 x 12	G205
		10K1	2.0		72	W6 x 12	G208
		10K1	2.5		48*	20G@14plf W6 x 12	G256
	Gypsum Board	10K1	2.5	NW	48	W8 x 24	G548
1 1/2 Hr.	Acoustical	12K1, 18LH02	2.5	LW, NW	NL	20G@13plf W8 x 15	D216 D219
	Gypsum Board			NW		20G@20plf W8 x 28	D502
	Exposed Grid	10K1	2.5	NW	24 (48)	20G@13plf W6 x 12	G203
		10K1	2.5		48*	20G@14plf W6 x 12	G205
		10K1	2.0		72	W6 x 12	G208
		10K1	2.5		24 (48)		G213
		10K1	2.5		24 (48)	20G@13plf W8 x 31	G228
		10K1	2.0		24 (48)	20G@13plf W8 x 24	G229
		10K1	2.5		24 (48)	20G@13plf W6 x 12	G243
		10K1	2.5		24 (48)	20G@13plf W8 x 31	G268
	Gypsum Board	12K1	2.0	NW	24 (48)	NS	G502
2 Hr.	Acoustical	12K1, 18LH02	2.5	LW, NW	NL	20G@13plf W8 x 15	D216 D219
	Gypsum Board			NW		20G@20plf W8 x 28	D502
	Concealed Grid	10K1	2.25	NW	24 (48)	W6 x 25	G023
		8K1	2.5		24 (48)	20G@13plf W8 x 20	G031
		10K1			30 (48)	20G@13plf W10 x 21	G036
	Exposed Grid	10K1	2.5	NW	24 (48)	20G@13plf W6 x 12	G203
		10K1	2.5		48*	20G@14plf W6 x 12	G205
		10K1	2.5		72	W6 x 12	G208

APPENDIX A

FLOOR - CEILING ASSEMBLIES WITH MEMBRANE PROTECTION

		10K1	2.5		24 (48)		G213
		10K1	2.5		24 (48)	W8 x 31	G227
		10K1	2.5		24 (48)	20G@13plf W8 x 31	G228
		10K1	2.5		24 (48)	20G@13plf W8 x 24	G229
		10K1	2.5		24 (48)	20G@13plf W6 x 12	G243
		10K1	2.5		48*	20G@14plf W6 x 12	G256
		10K1	2.5		24 (48)	20G@13plf W8 x 31	G268
	Gypsum Board	10K1	2.0	NW	24 (48)	NS	G505
		10K1	2.5		24 (48)	20G14plf W8 x 31	G514
		10K1	2.5		24 (48)	20G@13plf W10 x 21	G523
		10K1	2.5		24 (48)	20G@13plf W8 x 24	G529
		10K1	2.5		24 (48)	20G@13plf W10 x 21	G547
3 Hr.	Acoustical	12K1, 18LH02	3.25	LW, NW	NL	20G@13plf W8 x 15	D216
							D219
	Concealed Grid	10K1	3.5	NW	24 (48)	20G@13plf W8 x 20	G033
		10K1	3.25		30 (48)	20G@13plf W10 x 21	G036
	Exposed Grid	10K1	3.5	NW	48*	20G@14plf W6 x 12	G205
		10K1	3.5		24 (48)	W6 x 12	G213
		10K1	3.25		24 (48)	20G@13plf W8 x 24	G229
		10K1	3.5		48*	W6 x 12	G256
		10K1 (22 ksi max.)	2.63		24 (48)	20G@13plf W8 x 31	G268
	Gypsum Board	10K1	3.0	NW	24 (48)	20G@13plf W10 x 21	G523
		10K1	2.75		24 (48)	20G@13plf W8 x 24	G529
		10K1	3.0		24 (48)	20G@13plf W10 x 21	G547

APPENDIX A

FLOOR - CEILING ASSEMBLIES WITH SPRAY APPLIED FIRE RESISTIVE MATERIALS

Restrained Assembly Rating	Protection Material	Minimum Joist Size	Concrete		Maximum Joist Spacing	Minimum Primary Support Member	UL Design Number
			Minimum Thickness (in.)	Type			
1 Hr.	SAFRM	NS	2.5	LW, NW	NL	W8 x 28	D759
		10K1	2.5				D779
		10K1	2.5				D780
		NS	3.25	LW			D782
		10K1*	2.5	LW			D925
			3.5	NW			
		16K6*	NS	LW, NW	42	20G@20plf W8 x 28	G701
		16K6	3.0	LW	50.5	NS	G702
			3.75	NW			
		16K6*	2.5	LW, NW	42	NS	G705
		16K6	3.0	LW	50.5	NS	G706
			3.75	NW			
		16K6*	2.5	LW, NW	42	20G@20plf W8 x 28	G708
		NS	2.5		42	W8 x 28	G709
		16K6*	2.5		42	20g@20plf W8 x 24	G801
		12K1	3.0	LW	50.5	NS	G802
			3.75	NW			
1 1/2 Hr.	SAFRM	NS	2.5	LW, NW	NL	W8 x 28	D759
		10K1	2.5				D779
		10K1	2.5				D780
		NS	3.25	LW			D782
		10K1*	3.0	LW			D925
			4.0	NW			
		16K6*	2.5	LW, NW	42	20G@20plf W8 x 28	G701
		16K6	3.5	LW	50.5	NS	G702
			4.5	NW			
		16K6*	2.5	LW, NW	42	NS	G705
		16K6	3.5	LW	50.5	NS	G706
			4.5	NW			
		16K6*	2.5	LW, NW	42	20G@20plf W8 x 28	G708
		NS	2.5		42	W8 x 28	G709
		16K6*	2.5		42	20G@20plf W8 x 24	G801
		12K5	3.5	LW	50.5	NS	G802
			4.5	NW			

APPENDIX A

FLOOR - CEILING ASSEMBLIES WITH SPRAY APPLIED FIRE RESISTIVE MATERIALS

2 Hr.	SAFRM	NS	2.5	LW, NW	NL	W8 x 28	D759
		10K1	2.5				D779
		10K1	2.5				D780
		NS	3.25	LW			D782
		10K1*	3.25	LW			D925
			4.5	NW			
		16K6*	2.5	LW, NW	42	20G@20plf W8 x 28	G701
		16K6	4.0	LW	50.5	NS	G702
			5.25	NW			
		16K6*	2.5	LW,NW	42	NS	G705
		16K6	4.0	LW	50.5	NS	G706
			5.25	NW			
		16K6*	2.5	LW, NW	42	20G@20plf W8 x 28	G708
		NS	2.5		42	W8 x 28	G709
		16K6*	2.5		42	20G@20plf W8 x 24	G801
		12K5	4.0	LW	50.5	NS	G802
			5.25	NW			
3 Hr.	SAFRM	NS	2.5	LW, NW	NL	W8 x 28	D759
		10K1	2.5				D779
		10K1	2.5				D780
		NS	3.25	LW			D782
		10K1*	4.19	LW			D925
			5.25	NW			
		16K6*	NS	LW, NW	42	20G@20plf W8 x 28	G701
		16K6*	2.75		42	NS	G705
		16K6*	2.75		42	20G@20plf W8 x 28	G708
		NS	2.75		42	W8 x 28	G709
		16K6*	2.75		42	20G@20plf W8 x 24	G801
4 Hr.	SAFRM	10K1	2.5	LW, NW	NL	W8 x 28	D779
		NS	3.25	LW			D782

*** Special Area Requirements**

APPENDIX A

ROOF - CEILING ASSEMBLIES WITH MEMBRANE PROTECTION

Restrained Assembly Rating	Protection Material	Minimum Joist Size	Built Up Roof		Maximum Joist Spacing (in.)	Minimum Primary Support Member	UL Design Number
			Deck Material Description	Insulation			
1 Hr.	Exposed Grid	12K1	22 MSG Min.	Fiber Board	84	W8 x 17	P201
		10K1	26 MSG Min.		48	W6 x 12	P202
		10K1	26 MSG Min.		48	20G@13plf	P211
		12K3	28 MSG Min.		72	20G@13plf W8 x 17	P214
		12K1	26 MSG Min.		72	20G@13plf W6 x 12	P225
		12K3	24 MSG Min.	Building Units	48	NS	P227
		12K3	26 MSG Min.	Fiber Board	72	20G@13plf W6 x 12	P230
		12K1	26 MSG Min.	Insulating Concrete	48	20G@14plf* W8 x 15	P231
		12K3	24 MSG Min.	Foamed Plastic	72	W8 x 15	P235
		10K1	28 MSG Min.	Insulating Concrete	72	20G@13plf W8 x 15	P246
		12K5	26 MSG Min.	Fiber Board	48	W6 x 12	P250
		12K1	28 MSG Min.	Insulating Concrete	72	20G@13plf W6 x 12	P251
		10K1	22 MSG Min.	Fiber Board	72	W6 x 12	P254
		10K1	28 MSG Min.	Insulating Concrete	72	W8 x 15	P255
		10K1	24 MSG Min.	Fiber Board	72	NS	P259
		12K1	28 MSG Min.	Insulating Concrete	72	20G@13plf W6 x 12	P261
		12K1	26 MSG Min.	Insulating Concrete	72	W8 x 15	P264
		10K1	Metal Roof Deck Panels	Batts and Blankets	60	NS	P265
		10K1	26 MSG Min.	Fiber Board	48	W6 x 16	P267
		10K1	Metal Roof Deck Panels	Batts and Blankets	60	NS	P268
		12K1	26 MSG Min.	Insulating Concrete	72	20G@14plf* W8 x 15	P269
	Fiber Board	10K1	24 MSG Min.	Fiber Board	NS	W6 x 16	P301
		10K1	22 MSG Min.		48	NS	P302
		10K1	22 MSG Min.		NS	W6 x 16	P303
	Gypsum Board	12K3	26 MSG Min.	Insulating Concrete	60	W8 x 24	P509
		12K3	24 MSG Min.	Fiber Board	72	20G@13plf	P510

APPENDIX A

ROOF - CEILING ASSEMBLIES WITH MEMBRANE PROTECTION

						W8 x 13	
		10K1	22 MSG Min.	Fiber Board	72	20G@13plf	P514
		10K1	20 MSG Min.	Fiber Board	48	NS	P519
1 1/2 Hr.	Exposed Grid	12K1	26 MSG Min.	Fiber Board	72	20G@13plf W6 x 12	P225
		12K3	24 MSG Min.	Building Units	48	NS	P227
		12K3	26 MSG Min.	Fiber Board	48	20G@13plf W6 x 12	P230
		12K1	26 MSG Min.	Insulating Concrete	48	20G@14plf* W8 x 24	P231
		12K5	26 MSG Min.	Fiber Board	48	W6 x 12	P250
		12K1	28 MSG Min.	Insulating Concrete	72	20G@13plf W6 x 12	P251
		10K1	24 MSG Min.	Fiber Board	72	NS	P259
		10K1	Metal Roof Deck Panels	Batts and Blankets	60	NS	P265
		10K1	20 MSG Min.	Fiber Board	48	NS	P266
		10K1	Metal Roof Deck Panels	Batts and Blankets	60	NS	P268
		12K1	26 MSG Min.	Insulating Concrete	72	20G@14plf* W8 x 24	P269
	Fiber Board	10K1	24 MSG Min.	Fiber Board	NS	W6 x 16	P301
	Metal Lath	12K5	22 MSG Min.	Fiber Board	72	NS	P404
	Gypsum Board	12K3	24 MSG Min.	Fiber Board	72	20G@13plf W8 x 13	P510
2 Hr.	Exposed Grid	10K1	24 MSG Min.	Fiber Board	72	W6 x 12	P237
		12K1	28 MSG Min.	Insulating Concrete	72	20G@13plf W6 x 12	P251
		10K1	20 MSG Min.	Fiber Board	48	NS	P266
	Fiber Board	10K1	24 MSG Min.	Fiber Board	NS	W6 x 16	P301
	Metal Lath	12K5	22 MSG Min.	Fiber Board	72	NS	P404
	Gypsum Board	10K1	22 MSG Min.	Fiber Board	72	20G@13plf	P514
			20 MSG Min.		48	NS	P519
		14K1	26 MSG Min.	Insulating Concrete	66	NS	P520
3 Hr.	Metal Lath	10K1	28 MSG Min.	Insulating Concrete	48	NS	P405

*Special Area Requirements

APPENDIX A

ROOF - CEILING ASSEMBLIES WITH SPRAY APPLIED FIRE RESISTIVE MATERIALS

Restrained Assembly Rating	Protection Material	Minimum Joist Size	Built Up Roof		Maximum Joist Spacing (in.)	Minimum Primary Support Member	UL Design Number
			Deck Material Description	Insulation			
1 Hr.	SAFRM	10K1	22 MSG Min.	Building Units	NS	NS	P822
		12K3	22 MSG Min.	Fiber Board	NS	W8 x 20	P824
1 Hr. and 1-1/2 Hr.	SAFRM	12K5	28 MSG Min.	Insulating Concrete	96	W6 x 16	P919
1-1/2 Hr. and 2 Hr.	SAFRM	10K1	22 MSG Min.	Building Units	NS	W6 x 16	P728
1 Hr., 1-1/2 Hr. and 2 Hr.	SAFRM	14K4	22 MSG Min.	Fiber Board	NS	20G@13plf W6 x 16	P701
		14K4	22 MSG Min.	Fiber Board	NS	20G@13plf W6 x 16	P711
		12K3	22 MSG Min.	Foamed Plastic	NS	W6 x 16	P717
		10K1	22 MSG Min.	Foamed Plastic	NS	20G@13plf W8 x 28	P725
		10K1	22 MSG Min.	Fiber Board	NS	20G@13plf W6 x 16	P726
		14K4	22 MSG Min.	Fiber Board	NS	20G@13plf W6 x 16	P734
		14K4	22 MSG Min.	Fiber Board	NS	20G@13plf W6 x 16	P736
		10K1	22 MSG Min.	Foamed Plastic	NS	W6 x 16	P739
		10K1	22 MSG Min.	Fiber Board	NS	W6 x 16	P740
		10K1	22 MSG Min.	Foamed Plastic	NS	W6 x 16	P743
		12K3	22 MSG Min.	Fiber Board	NS	20G@13plf W6 x 16	P801
		10K1	22 MSG Min.	Fiber Board	NS	20G@13plf W6 x 16	P815
		10K1	22 MSG Min.	Fiber Board	NS	W6 x 16	P816
		10K1	22 MSG Min.	Foamed Plastic	NS	W6 x 16	P819
		10K1	22 MSG Min.	Foamed Plastic	NS	W6 x 16	P825
		10K1	22 MSG Min.	Foamed Plastic	NS	W6 x 16	P827
		12K1	22 MSG Min.	Fiber Board	NS	20G@13plf W8 x 20	P828
		10K1	28 MSG Min.	Insulating Concrete	NS	20G@13plf W8 x 10	P902

APPENDIX A

ROOF - CEILING ASSEMBLIES WITH SPRAY APPLIED FIRE RESISTIVE MATERIALS

		10K1	28 MSG Min.	Insulating Concrete	NS	W8 x 10	P907
		10K1	28 MSG Min.	Insulating Concrete	NS	20G@13plf W8 x 10	P908
		10K1	28 MSG Min.	Insulating Concrete	NS	W8 x 10	P920
		12K5	28 MSG Min.	Insulating Concrete	NS	20G@13plf W8 x 10	P921
		10K1	28 MSG Min.	Insulating Concrete	NS	W6 x 16	P922
		10K1	28 MSG Min.	Insulating Concrete	NS	20G@13plf W8 x 10	P923
		10K1	28 MSG Min.	Insulating Concrete	NS	20G@13plf W8 x 10	P925
		12K5	28 MSG Min.	Insulating Concrete	NS	W8 x 10	P926
		14K4	28 MSG Min.	Insulating Concrete	NS	20G@13plf W8 x 10	P927
		12K5	28 MSG Min.	Insulating Concrete	NS	20G@13plf W8 x 10	P928
		12K3	28 MSG Min.	Insulating Concrete	NS	20G@13plf W8 x 10	P929
		10K1	28 MSG Min.	Insulating Concrete	NS	W6 x 16	P936
2 Hr.	SAFRM	12K3	22 MSG Min.	Foamed Plastic	NS	W6 x 16	P718
		12K3	22 MSG Min.	Foamed Plastic	NS	20G@13plf W6 x 16	P720
		12K3	22 MSG Min.	Foamed Plastic	NS	W6 x 16	P729
1 Hr., 1-1/2 Hr. 2 Hr. and 3 Hr.	SAFRM	10K1	22 MSG Min.	Foamed Plastic	NS	20G@13plf W6 x 16	P719
		10K1	22 MSG Min.	Foamed Plastic	NS	W6 x 16	P722
		10K1	22 MSG Min.	Foamed Plastic	NS	W6 x 16	P723
		10K1	22 MSG Min.	Foamed Plastic	NS	W8 x 28	P732
		10K1*,16K2	22 MSG Min.	Foamed Plastic	NS	W6 x 16	P733
		10K1*	22 MSG Min.	Foamed Plastic	NS	W6 x 16	P826

*** Special Area Requirements**

APPENDIX B

BAY LENGTH, OSHA ERECTION STANDARDS, BRIDGING ILLUSTRATIONS

BAY LENGTH DEFINITIONS

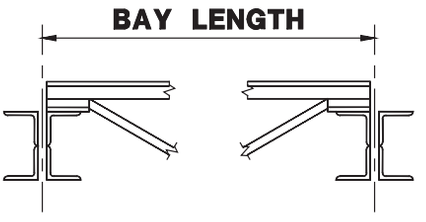

JOIST GIRDERS

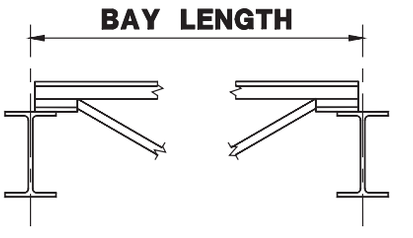

STEEL BEAM

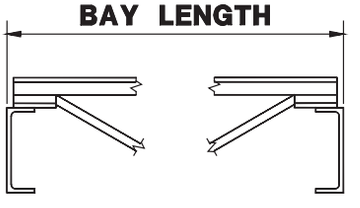

STEEL CHANNEL

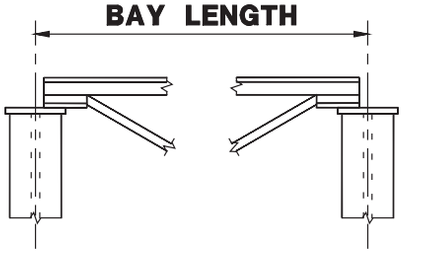

STEEL COLUMN

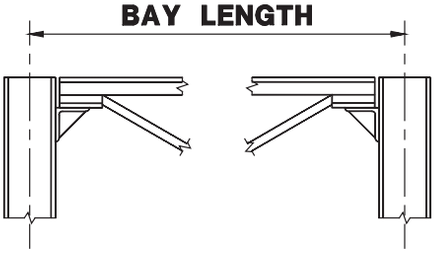

STEEL COLUMN

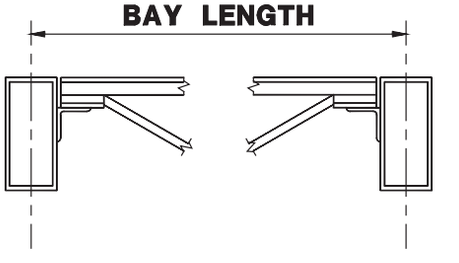

STEEL TUBE

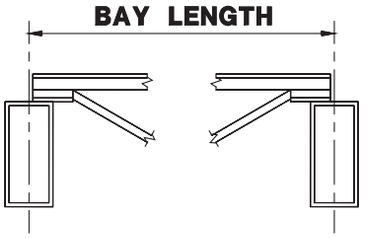

STEEL TUBE

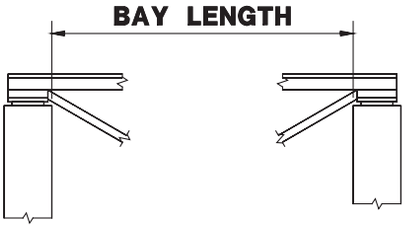

MASONRY OR TILT-UP

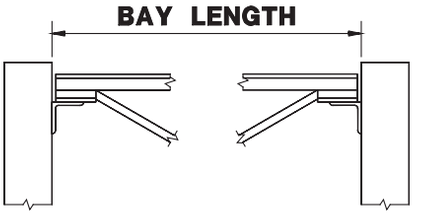

MASONRY OR TILT-UP

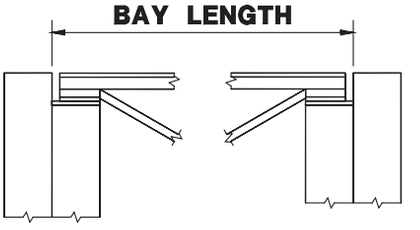

MASONRY WITH PILASTER

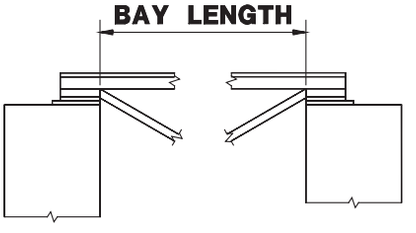

MASONRY OR TILT-UP

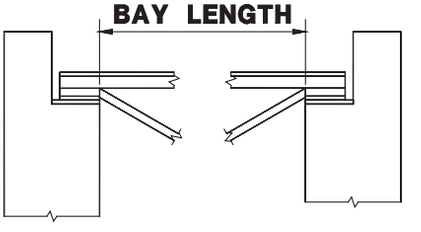

MASONRY OR TILT-UP

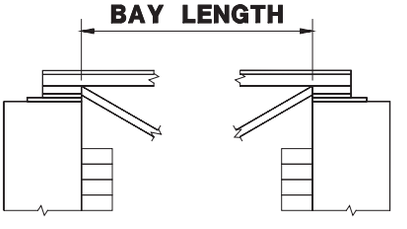

MASONRY WITH FACE BRICK

APPENDIX B

OSHA STEEL ERECTION STANDARD
PARTS §1926.751 AND §1926.757 OPEN WEB STEEL JOISTS

§1926.751 Definitions.

Anchored bridging means that the steel joist bridging is connected to a bridging terminus point.

Bolted diagonal bridging means diagonal bridging that is bolted to a steel joist or joists.

Bridging clip means a device that is attached to the steel joist to allow the bolting of the bridging to the steel joist.

Bridging terminus point means a wall, a beam, tandem joists (with all bridging installed and a horizontal truss in the plane of the top chord) or other element at an end or intermediate point(s) of a line of bridging that provides an anchor point for the steel joist bridging.

Column means a load-carrying vertical member that is part of the primary skeletal framing system. Columns do not include posts.

Constructability means the ability to erect structural steel members in accordance with subpart R without having to alter the over-all structural design.

Construction load (for joist erection) means any load other than the weight of the employee(s), the joists and the bridging bundle.

Erection bridging means the bolted diagonal bridging that is required to be installed prior to releasing the hoisting cables from the steel joists.

Personal fall arrest system means a system used to arrest an employee in a fall from a working level. A personal fall arrest system consists of an anchorage, connectors, a body harness and may include a lanyard, deceleration device, lifeline, or suitable combination of these. The use of a body belt for fall arrest is prohibited.

Project structural engineer means the registered, licensed professional responsible for the design of structural steel framing and whose seal appears on the structural contract documents.

Qualified person means one who, by possession of a recognized degree, certificate, or professional standing, or who by extensive knowledge, training, and experience, has successfully demonstrated the ability to solve or resolve problems relating to the subject matter, the work, or the project.

Steel joist means an open web, secondary load-carrying member of 144 feet (43.9 m) or less, designed by the manufacturer, used for the support of floors and roofs. This does not include structural steel trusses or cold-formed joists.

Steel joist girder means an open web, primary load-carrying member, designed by the manufacturer, used for the support of floors and roofs. This does not include structural steel trusses.

Structural steel means a steel member, or a member made of a substitute material (such as, but not limited to, fiberglass, aluminum or composite members). These members include, but are not limited to, steel joists, joist girders, purlins, columns, beams, trusses, splices, seats, metal decking, girts, and all bridging, and cold formed metal framing which is integrated with the structural steel framing of a building.

§ 1926.757 Open web steel joists.

(a) General.

(1) Except as provided in paragraph (a)(2) of this section, where steel joists are used and columns are not framed in at least two directions with solid web structural steel members, a steel joist shall be field-bolted at the column to provide lateral stability to the column during erection. For the installation of this joist:

(i) A vertical stabilizer plate shall be provided on each column for steel joists. The plate shall be a minimum of 6 inch by 6 inch (152 mm by 152 mm) and shall extend at least 3 inches (76 mm) below the bottom chord of the joist with a 13 /16 inch (21 mm) hole to provide an attachment point for guying or plumbing cables.

(ii) The bottom chords of steel joists at columns shall be stabilized to prevent rotation during erection.

(iii) Hoisting cables shall not be released until the seat at each end of the steel joist is field-bolted, and each end of the bottom chord is restrained by the column stabilizer plate.

(2) Where constructability does not allow a steel joist to be installed at the column:

i. an alternate means of stabilizing joists shall be installed on both sides near the column and shall:
   (A) provide stability equivalent to paragraph (a)(1) of this section;
   (B) be designed by a qualified person;
   (C) be shop installed; and
   (D) be included in the erection drawings.

ii. hoisting cables shall not be released until the seat at each end of the steel joist is field-bolted and the joist is stabilized.

(3) Where steel joists at or near columns span 60 feet (18.3 m) or less, the joist shall be designed with sufficient strength to allow one employee to release the hoisting cable without the need for erection bridging.

SJI User Note: See OSHA Directive number CPL-02-01-040 below for alternate compliance methods.

(4) Where steel joists at or near columns span more than 60 feet (18.3m), the joists shall be set in tandem with all bridging installed unless an alternative method of erection, which provides equivalent stability to the steel joist, is designed by a qualified person and is included in the site-specific erection plan.

(5) A steel joist or steel joist girder shall not be placed on any support structure unless such structure is stabilized.

(6) When steel joist(s) are landed on a structure, they shall be secured to prevent unintentional displacement prior to installation.

(7) No modification that affects the strength of a steel joist or steel joist girder shall be made without the approval of the project structural engineer of record.

(8) Field-bolted joists.
  (i) Except for steel joists that have been pre assembled into panels, connections of individual steel joists to steel structures in bays of 40 feet (12.2 m) or more shall be fabricated to allow for field bolting during erection.
  (ii) These connections shall be field-bolted unless constructability does not allow.

(9) Steel joists and steel joist girders shall not be used as anchorage points for a fall arrest system unless written approval to do so is obtained from a qualified person.

(10) A bridging terminus point shall be established before bridging is installed.

(b) Attachment of steel joists and steel joist girders.

(1) Each end of ‘‘K’’ series steel joists shall be attached to the support structure with a minimum of two 1 /8 -inch (3 mm) fillet welds 1 inch (25 mm) long or with two 1 /2 -inch (13 mm) bolts, or the equivalent.

SJI User Note: For a welded K-series connection, the SJI Specification requires a minimum final length of 2-1/2 inches.

(2) Each end of ‘‘LH’’ and ‘‘DLH’’ series steel joists and steel joist girders shall be attached to the support structure with a minimum of two 1 /4 –inch (6 mm) fillet welds 2 inches (51 mm) long, or with two 3 /4 -inch (19 mm) bolts, or the equivalent.

(3) Except as provided in paragraph (b)(4) of this section, each steel joist shall be attached to the support structure, at least at one end on both sides of the seat, immediately upon placement in the final erection position and before additional joists are placed.

(4) Panels that have been pre-assembled from steel joists with bridging shall be attached to the structure at each corner before the hoisting cables are released.

(c) Erection of steel joists.

(1) Both sides of the seat of one end of each steel joist that requires bridging under Tables A and B shall be attached to the support structure before hoisting cables are released.

(2) For joists over 60 feet, both ends of the joist shall be attached as specified in paragraph (b) of this section and the provisions of paragraph (d) of this section met before the hoisting cables are released.

(3) On steel joists that do not require erection bridging under Tables A and B, only one employee shall be allowed on the joist until all bridging is installed and anchored.

► TABLE **A**.—ERECTION BRIDGING FOR SHORT SPAN JOISTS

Joist	Span
10K1	NM
12K1	23–0
12K3	NM
12K5	NM
14K1	27–0
14K3	NM
14K4	NM
14K6	NM
16K2	29–0
16K3	30–0
16K4	32–0
16K5	32–0
16K6	NM
16K7	NM
16K9	NM
18K3	31–0
18K4	32–0
18K5	33–0
18K6	35–0
18K7	NM
18K9	NM
18K10	NM
20K3	32–0
20K4	34–0
20K5	34–0
20K6	36–0
20K7	39–0
20K9	39–0
20K10	NM
22K4	34–0
22K5	35–0
22K6	36–0
22K7	40–0
22K9	40–0
22K10	NM

Joist	Span
22K11	NM
24K4	36–0
24K5	38–0
24K6	39–0
24K7	43–0
24K8	43–0
24K9	44–0
24K10	NM
24K12	NM
26K5	38–0
26K6	39–0
26K7	43–0
26K8	44–0
26K9	44-0
26K10	49–0
26K12	NM
28K6	40–0
28K7	43–0
28K8	44–0
28K9	45–0
28K10	49–0
28K12	53–0
30K7	44–0
30K8	45–0
30K9	45–0
30K10	50–0
30K11	52–0
30K12	54–0

NM = diagonal bolted bridging not mandatory

► TABLE A.—ERECTION BRIDGING FOR SHORT SPAN JOISTS-[Continued]

Joist	Span
10KCS1	NM
10KCS2	NM
10KCS3	NM
12KCS1	NM
12KCS2	NM
12KCS3	NM
14KCS1	NM
14KCS2	NM
14KCS3	NM
16KCS2	NM
16KCS3	NM
16KCS4	NM
16KCS5	NM
18KCS2	35–0
18KCS3	NM
18KCS4	NM
18KCS5	NM
20KCS2	36–0
20KCS3	39–0
20KCS4	NM
20KCS5	NM
22KCS2	36–0
22KCS3	40–0
22KCS4	NM
22KCS5	NM
24KCS2	39–0
24KCS3	44–0
24KCS4	NM
24KCS5	NM
26KCS2	39–0
26KCS3	44–0
26KCS4	NM
26KCS5	NM
28KCS2	40–0
28KCS3	45–0
28KCS4	53–0
28KCS5	53–0
30KCS3	45–0
30KCS4	54–0
30KCS5	54–0

NM = diagonal bolted bridging not mandatory

► TABLE B.—ERECTION BRIDGING FOR LONG SPAN JOISTS

Joist	Span
18LH02	33–0
18LH03	NM.
18LH04	NM.
18LH05	NM.
18LH06	NM.
18LH07	NM.
18LH08	NM.
18LH09	NM.
20LH02	33–0
20LH03	38–0
20LH04	NM.
20LH05	NM.
20LH06	NM.
20LH07	NM.
20LH08	NM.
20LH09	NM.
20LH10	NM.
24LH03	35–0
24LH04	39–0
24LH05	40–0
24LH06	45–0
24LH07	NM.
24LH08	NM.
24LH09	NM.
24LH10	NM.
24LH11	NM.
28LH05	42–0
28LH06	46-0
28LH07	54-0
28LH08	54-0
28LH09	NM.
28LH10	NM.
28LH11	NM.
28LH12	NM.
28LH13	NM.
32LH06	47–0 through 60–0
32LH07	47–0 through 60–0
32LH08	55–0 through 60–0
32LH09	NM through 60–0
32LH10	NM through 60–0
32LH11	NM through 60–0
32LH12	NM through 60–0
32LH13	NM through 60–0
32LH14	NM through 60–0
32LH15	NM through 60–0
36LH07	47–0 through 60–0
36LH08	47–0 through 60–0
36LH09	57–0 through 60–0
36LH10	NM through 60–0
36LH11	NM through 60–0
36LH12	NM through 60–0
36LH13	NM through 60–0
36LH14	NM through 60–0
36LH15	NM through 60–0

NM = diagonal bolted bridging not mandatory

(4) Employees shall not be allowed on steel joists where the span of the steel joist is equal to or greater than the span shown in Tables A and B except in accordance with § 1926.757(d).

(5) When permanent bridging terminus points cannot be used during erection, additional temporary bridging terminus points are required to provide stability.

(d) Erection bridging.

(1) Where the span of the steel joist is equal to or greater than the span shown in Tables A and B, the following shall apply:
   i. A row of bolted diagonal erection bridging shall be installed near the midspan of the steel joist;
   ii. Hoisting cables shall not be released until this bolted diagonal erection bridging is installed and anchored; and
   iii. No more than one employee shall be allowed on these spans until all other bridging is installed and anchored.

(2) Where the span of the steel joist is over 60 feet (18.3 m) through 100 feet (30.5 m), the following shall apply:
   i. All rows of bridging shall be bolted diagonal bridging;
   ii. Two rows of bolted diagonal erection bridging shall be installed near the third points of the steel joist;
   iii. Hoisting cables shall not be released until this bolted diagonal erection bridging is installed and anchored; and
   iv. No more than two employees shall be allowed on these spans until all other bridging is installed and anchored.

(3) Where the span of the steel joist is over 100 feet (30.5 m) through 144 feet (43.9 m), the following shall apply:
   i. All rows of bridging shall be bolted diagonal bridging;
   ii. Hoisting cables shall not be released until all bridging is installed and anchored; and
   iii. No more than two employees shall be allowed on these spans until all bridging is installed and anchored.

(4) For steel members spanning over 144 feet (43.9 m), the erection methods used shall be in accordance with § 1926.756.

(5) Where any steel joist specified in paragraphs (c)(2) and (d)(1), (d)(2), and (d)(3) of this section is a bottom chord bearing joist, a row of bolted diagonal bridging shall be provided near the support(s). This bridging shall be installed and anchored before the hoisting cable(s) is released.

(6) When bolted diagonal erection bridging is required by this section, the following shall apply:

i. The bridging shall be indicated on the erection drawing;
ii. The erection drawing shall be the exclusive indicator of the proper placement of this bridging;
iii. Shop-installed bridging clips, or functional equivalents, shall be used where the bridging bolts to the steel joists;
iv. When two pieces of bridging are attached to the steel joist by a common bolt, the nut that secures the first piece of bridging shall not be removed from the bolt for the attachment of the second; and
v. Bridging attachments shall not protrude above the top chord of the steel joist.

(e) Landing and placing loads.

(1) During the construction period, the employer placing a load on steel joists shall ensure that the load is distributed so as not to exceed the carrying capacity of any steel joist.

(2) Except for paragraph (e)(4) of this section, no construction loads are allowed on the steel joists until all bridging is installed and anchored and all joist-bearing ends are attached.

(3) The weight of a bundle of joist bridging shall not exceed a total of 1,000 pounds (454 kg). A bundle of joist bridging shall be placed on a minimum of three steel joists that are secured at one end. The edge of the bridging bundle shall be positioned within 1 foot (.30 m) of the secured end.

(4) No bundle of decking may be placed on steel joists until all bridging has been installed and anchored and all joist bearing ends attached, unless all of the following conditions are met:
(i) The employer has first determined from a qualified person and documented in a site-specific erection plan that the structure or portion of the structure is capable of supporting the load;
(ii) The bundle of decking is placed on a minimum of three steel joists;
(iii) The joists supporting the bundle of decking are attached at both ends;
(iv) At least one row of bridging is installed and anchored;
(v) The total weight of the bundle of decking does not exceed 4,000 pounds(1816 kg); and
(vi) Placement of the bundle of decking shall be in accordance with paragraph (e)(5) of this section.

(5) The edge of the construction load shall be placed within 1 foot (.30 m) of the bearing surface of the joist end.

OSHA Directive number CPL 02-01-040

The industry has conducted a number of tests to determine if joists that are now available would meet the requirements of 1926.757(a)(3). Their tests showed that of the joists now available, some would meet the requirement, but only if erectors followed a number of erection criteria that are not in the steel erection standard. Also, for some spans and dimensions, there are still no joists that would meet the requirement (even if those additional criteria were followed). Therefore, the enforcement policy which was set to expire on July 18, 2004, will remain in effect indefinitely. That policy is as follows: for all joists at or near columns that span 60 feet or less, employers will be considered to be in compliance with § 1926.757(a)(3) if they erect these joists either by: (1) installing bridging or otherwise stabilizing the joist prior to releasing the hoisting cable, or (2) releasing the cable without having a worker on the joists.

SJI User Note: While the OSHA directive provides alternates to provision 1926.757(a)(3), SJI member companies do not specifically check or design column joists for self-weight plus the weight of one erector releasing the hoisting cable without any erection bridging; they are NOT designed to satisfy 1926.757(a)(3). The SJI requires that the directive CPL 02-01-040 be followed, and that bridging be installed prior to releasing the hoisting cable or that the hoisting cable be released without walking on the joist. For further information, see Steel Joist Institute Technical Digest No. 9, “Handling and Erection of Steel Joists and Joist Girders”.

APPENDIX B

ILLUSTRATIONS OF OSHA BRIDGING TERMINUS POINTS (NON-MANDATORY)

Guidelines for Complying with OSHA Steel Erection Standard, Paragraph §1926.757(a)(10) and §1926.757(c)(5).

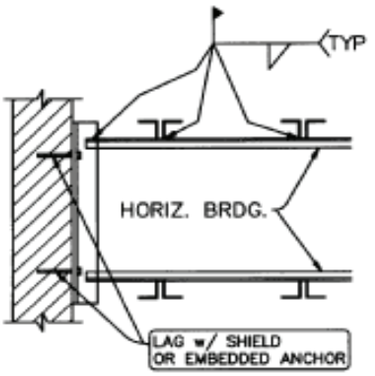

HORIZONTAL BRIDGING
TERMINUS AT WALL

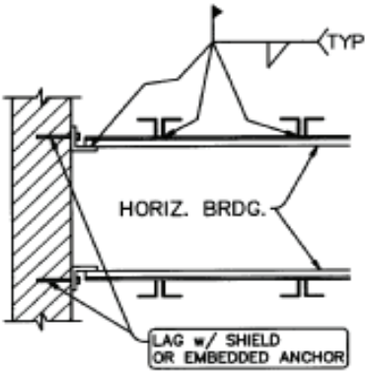

HORIZONTAL BRIDGING
TERMINUS AT WALL

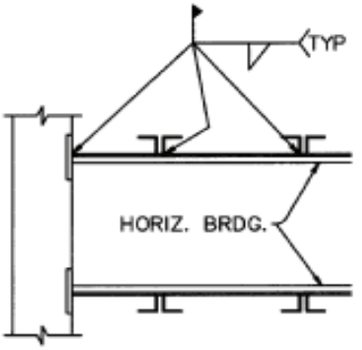

HORIZONTAL BRIDGING
TERMINUS AT PANEL WALL

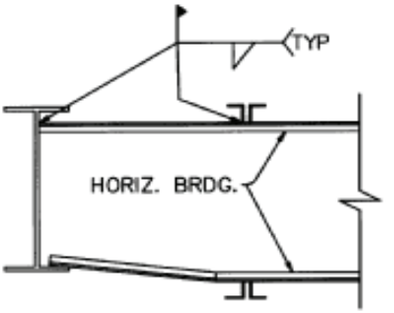

HORIZONTAL BRIDGING
TERMINUS AT
STRUCTURAL SHAPE

APPENDIX B

ILLUSTRATIONS OF OSHA BRIDGING TERMINUS POINTS (NON-MANDATORY)

Guidelines for Complying with OSHA Steel Erection Standard, Paragraph §1926.757(a)(10) and §1926.757(c)(5).

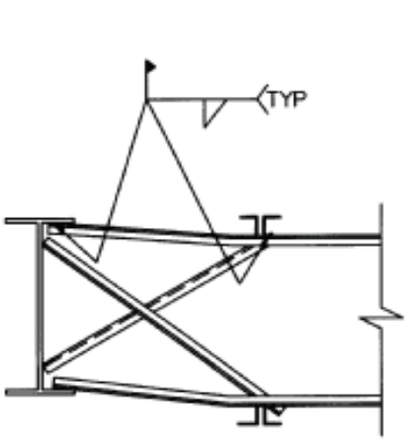

HORIZONTAL BRIDGING
TERMINUS AT STRUCTURAL
SHAPE WITH OPTIONAL
"X-BRIDGING"

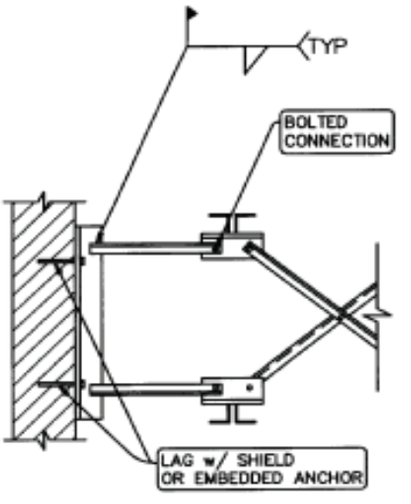

BOLTED DIAGONAL BRIDGING
TERMINUS AT WALL

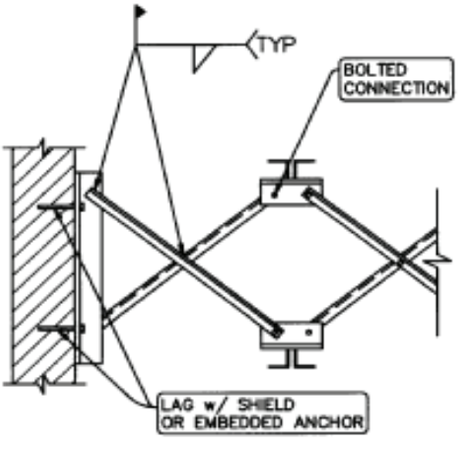

BOLTED DIAGONAL BRIDGING
TERMINUS AT WALL

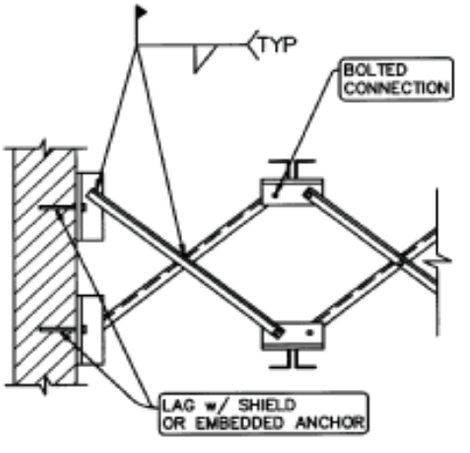

BOLTED DIAGONAL BRIDGING
TERMINUS AT WALL

APPENDIX B

ILLUSTRATIONS OF OSHA BRIDGING TERMINUS POINTS (NON-MANDATORY)

Guidelines for Complying with OSHA Steel Erection Standard, Paragraph §1926.757(a)(10) and §1926.757(c)(5).

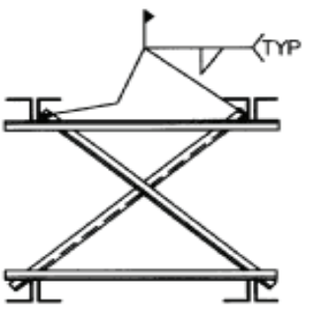

JOISTS PAIR BRIDGING
TERMINUS POINT

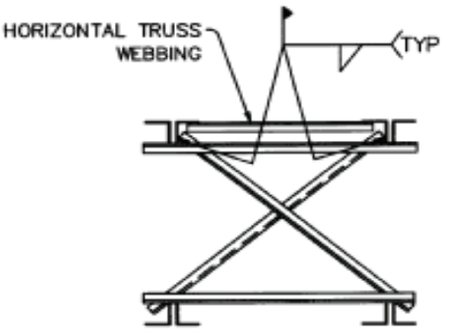

JOISTS PAIR BRIDGING
TERMINUS POINT

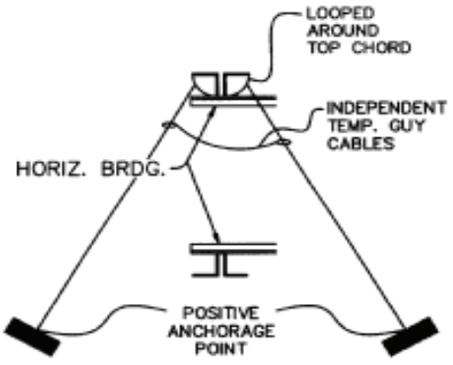

HORIZONTAL BRIDGING
TERMINUS POINT
SECURED BY TEMP.
GUY CABLES

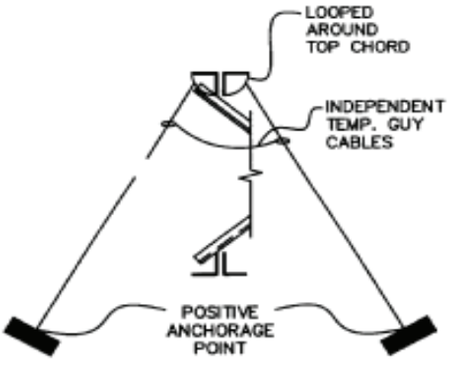

DIAGONAL BRIDGING
TERMINUS POINT
SECURED BY TEMP.
GUY CABLES

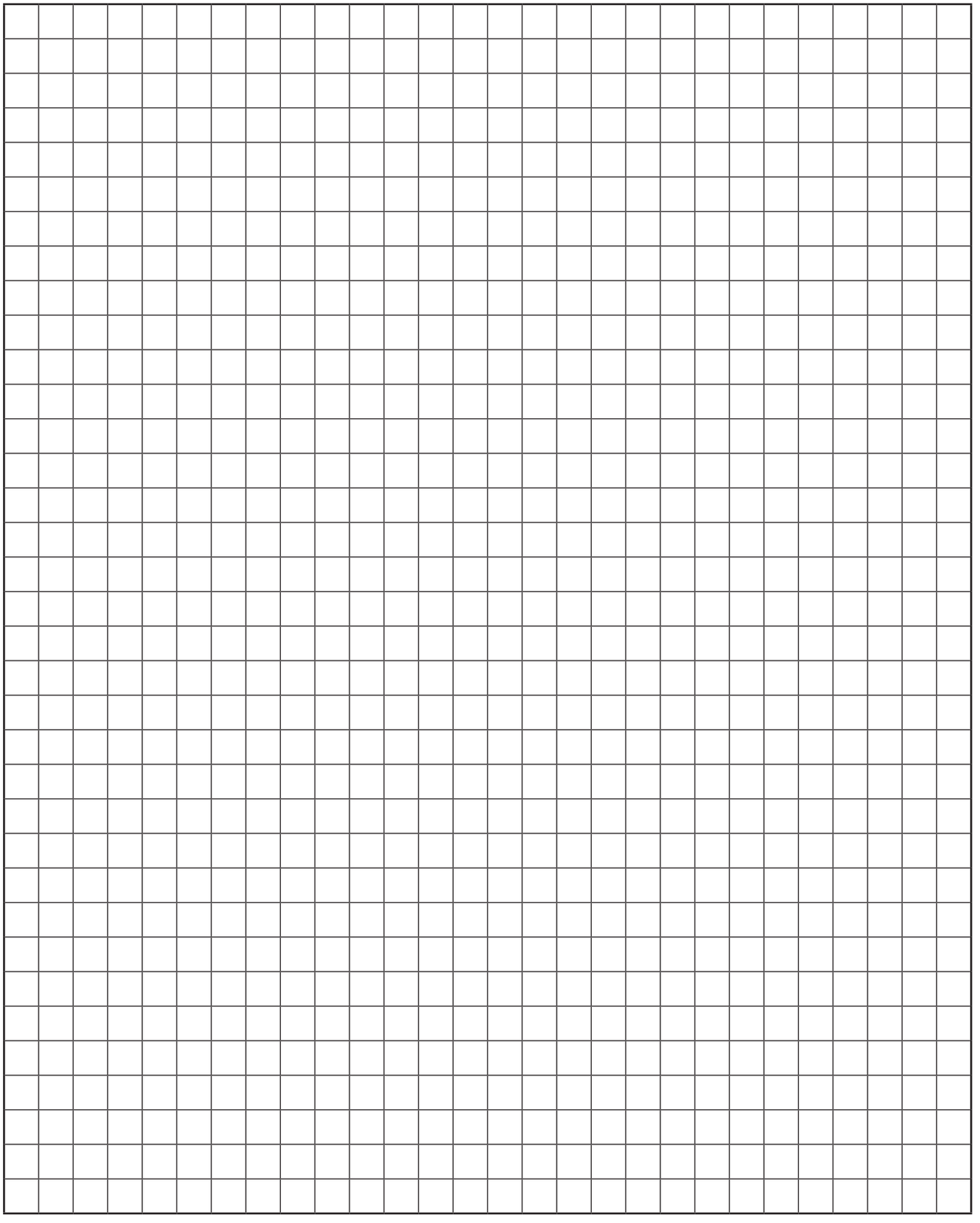

NOTES

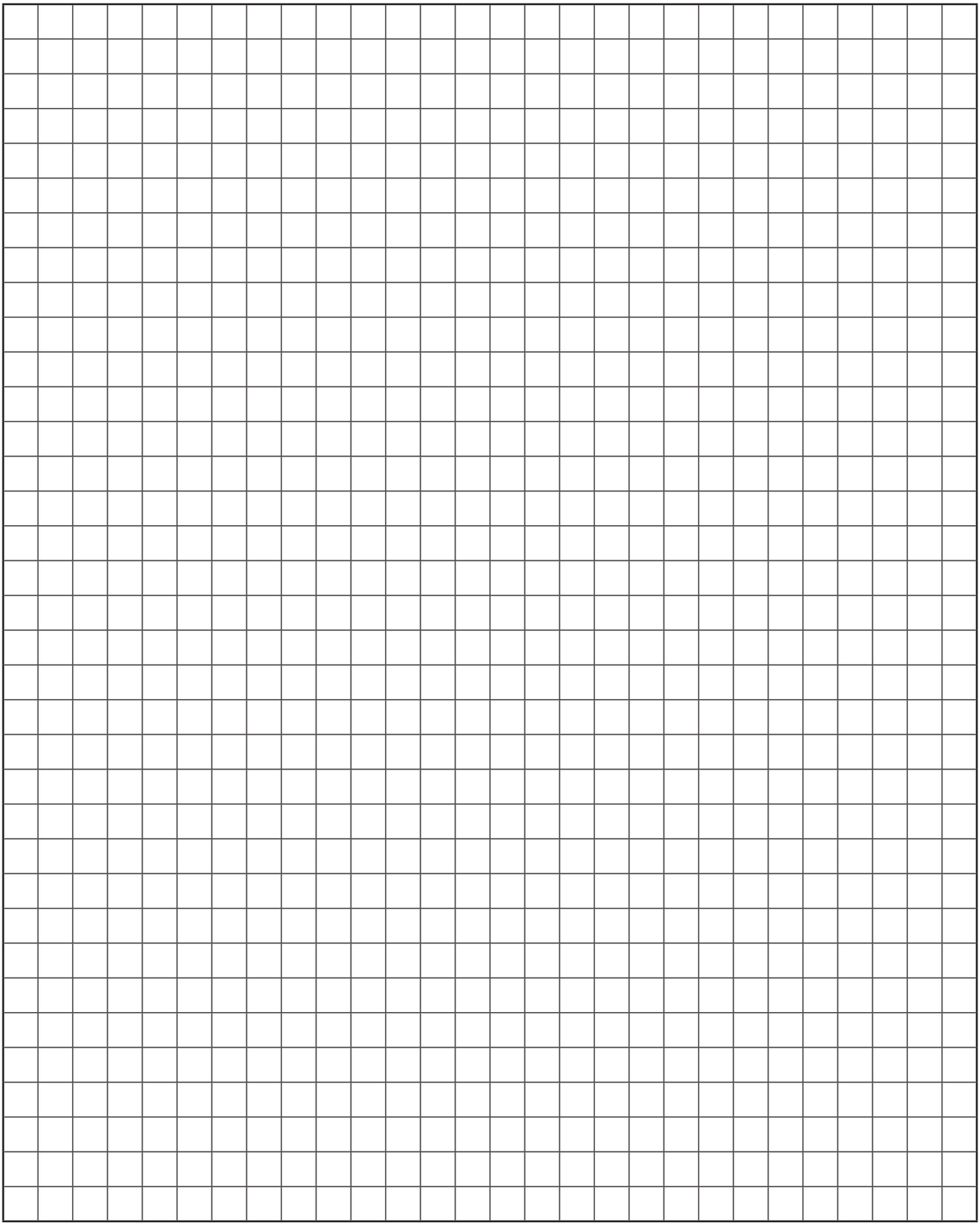

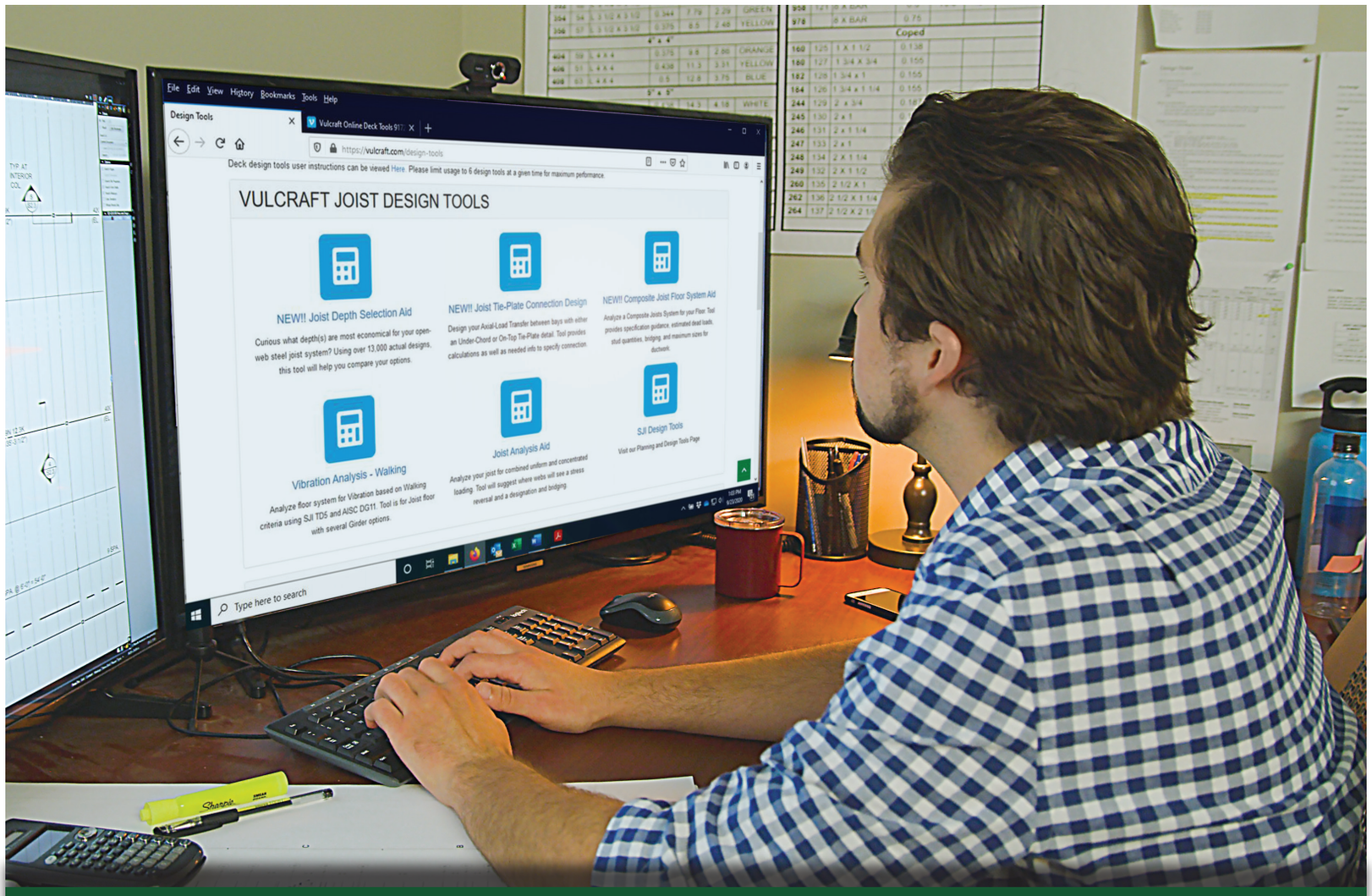

Online Joist Design at Your Fingertips

Vulcraft's Online Design Tools make steel joist and joist girder design easy, fast, and tailored to your specific project. Get immediate access to all the design data and product specs you need to create the most efficient and effective design for your structure — all at your fingertips. With Vulcraft's Online Design Tools, designers can enjoy unlimited possibilities by exploring options that are outside standard load table boundaries.

We are always open for design at **Vulcraft.com/design-tools.**

NUCOR®
VULCRAFT

Powerful Partnerships.
Powerful Results.

VULCRAFT SALES CORPORATION OFFICES

ATLANTA, GA
P. 770.307.2111

BALTIMORE, MD
P. 410.998.0800

BIRMINGHAM, AL
P. 205.982.4394

BOARDMAN, OH
P. 330.726.8833

CENTERVILLE, UT
P. 801.292.0730

COLUMBIA, SC
P. 803.358.1300

DALLAS, TX
P. 214.340.1883

DENVER, CO
P. 303.757.6323

EDISON, NJ
P. 732.738.8188

FLOWOOD, MS
P. 601.383.7807

GENEVA, NY
P. 315.828.1730

GERMANTOWN, WI
P. 262.251.5666

GRAND RAPIDS, MI
P. 616.949.2106

HINSDALE, IL
P. 630.887.1400

HOUSTON, TX
P. 281.251.8857

INDIANAPOLIS, IN
P. 317.576.5399

KERNSVILLE, NC
P. 336.497.5302

KNOXVILLE, TN
P. 865.690.6388

LEXINGTON, KY
P. 859.940.0152

LITTLE ROCK, AR
P. 501.758.6424

MEMPHIS, TN
P. 901.612.3481

MINNEAPOLIS, MN
P. 763.425.4399

NASHVILLE, TN
P. 615.871.9385

NEW HUDSON, MI
P. 248.486.6166

NORRISTOWN, PA
P. 610.539.6516

OKLAHOMA CITY, OK
P. 405.715.2844

ORANGE, CA
P. 714.957.5713

OVERLAND PARK, KS
P. 913.341.9299

PHOENIX, AZ
P. 623.385.1649

SACRAMENTO, CA
P. 916.488.8180

SALEM, NH
P. 603.894.1146

SAN ANTONIO, TX
P. 210.655.9070

SEATTLE, WA
P. 425.402.9011

SPRINGFIELD, OH
P. 937.390.2300

ST. LOUIS, MO
P. 636.266.1844

TAMPA, FL
P. 813.621.0684

Please Visit the **Contact Us** Page at www.Vulcraft.com to Find Your Closest Sales Office

NUCOR®
VULCRAFT
Powerful Partnerships
Powerful Results